USING MICRO CADAM®

A Complete Reference and User Guide for one of the World's Most Productive CAD Programs

By T. Daniel Smyth

SILVER PUBLISHING

Copyright© 1993 by SILVER PUBLISHING

All rights reserved. No part of this book shall be reproduced or transmitted in any form, by any means, electronic or manual, including photocopying, recording, or by any information storage or retrieval system, without written permission from the publisher. Portions of this book have been reproduced from the MICRO CADAM FIELD SUPPORT MANUAL and various other publications, with the permission of ALTIUM INC.

This book is sold *as is*, without warranty of any kind, either express or implied, respecting the contents of this book, including but not limited to implied warranties for the book's quality, performance, merchantability, or fitness for any particular purpose. Neither SILVER PUBLISHING nor its dealers or distributors shall be liable to the purchaser or any other person or entity with respect to any liability, loss, or damage caused or alleged to be caused directly or indirectly by this book.

The MICRO CADAM FREE SOFTWARE is provided *as is* and at no charge, without warranty of any kind, either express or implied, respecting the capability of this software, including but not limited to implied warranties for the software's quality, performance, merchantability, or fitness for any particular purpose. Neither SILVER PUBLISHING nor its dealers or distributors shall be liable to the purchaser or any other person or entity with respect to any liability, loss, or damage caused or alleged to be caused directly or indirectly by this software.

MICRO CADAM is a licensed trademark of ALTIUM INC.
PROFESSIONAL CADAM is a registered trademark of Dassault Systemes of America Corp.
CADAM is a registered trademark of Dassault Systemes of America Corp.
HPGL is a trademark of Hewlett-Packard Co.
IBM is a registered trademark of International Business Machines Corporation
DXF is a registered trademark of Autodesk, Inc.
AutoCAD is a registered trademark of Autodesk, Inc.
Other products mentioned in this book may be trademarks or registered trademarks of other companies.

Send all enquiries to:

SILVER PUBLISHING
P.O. Box 71566
Aurora, Ontario, CANADA
L4G 6S9

This book was printed in Canada on acid-free paper by WEBCOM LIMITED.

2 3 4 5 98 97 96 95 94

First Edition 1993
Second Edition 1994

ISBN 0-9697510-0-1

Dedication

To my best friend and wife, Debra
Without her help and understanding this book
could not have been written.

To my son, Graeme
For all those days I didn't
have the time to play with you.

Acknowledgements

This book was written with the help and support of many individuals. I would like to thank the following:

Daryl Yaeger of Yaeger Computer Services for his time and effort. Daryl wrote the chapter on **QUICKSTART** and provided countless suggestions and recommendations.

Len Turner of ALTIUM INC. played a pivotal role in this project. From the basic concept and through all of the changes that happened, Len realized the possibilities, and he always believed. He was always there when I needed him.

Jack Green of ALTIUM INC. for his interest and support. Without your help, Jack, this book might never have been started.

Peter Smyth who did an excellent job on the cover design and layout.

Egbert Verbrugge who spent countless hours proof reading.

And thanks to all those other unnamed individuals whose efforts contributed to this book.

Copyright© 1993 by SILVER PUBLISHING

All rights reserved. No part of this book shall be reproduced or transmitted in any form, by any means, electronic or manual, including photocopying, recording, or by any information storage or retrieval system, without written permission from the publisher. Portions of this book have been reproduced from the MICRO CADAM FIELD SUPPORT MANUAL and various other publications, with the permission of ALTIUM INC.

This book is sold *as is*, without warranty of any kind, either express or implied, respecting the contents of this book, including but not limited to implied warranties for the book's quality, performance, merchantability, or fitness for any particular purpose. Neither SILVER PUBLISHING nor its dealers or distributors shall be liable to the purchaser or any other person or entity with respect to any liability, loss, or damage caused or alleged to be caused directly or indirectly by this book.

The MICRO CADAM FREE DEMONSTRATION SOFTWARE is provided *as is* and at no charge, without warranty of any kind, either express or implied, respecting the capability of this software, including but not limited to implied warranties for the software's quality, performance, merchantability, or fitness for any particular purpose. Neither SILVER PUBLISHING nor its dealers or distributors shall be liable to the purchaser or any other person or entity with respect to any liability, loss, or damage caused or alleged to be caused directly or indirectly by this software.

HPGL is a trademark of Hewlett-Packard Co.
IBM is a registered trademark of International Business Machines Corporation
DXF is a registered trademark of Autodesk, Inc.

Send all enquiries to:

SILVER PUBLISHING
P.O. Box 71566
Aurora, Ontario, CANADA
L4G 6S9

First Edition 1993
Printed in Canada

ISBN 0-9697510-0-1

Dedication

To my best friend and wife, Debra
Without her help and understanding this book
could not have been written.

To my son, Graeme
For all those days I didn't
have the time to play with you.

Acknowledgements

This book was written with the help and support of many individuals. I would like to thank the following:

Many thanks to Daryl Yaeger of Yaeger Computer Services for his time and effort. Daryl wrote the chapter on **QUICKSTART** and provided countless suggestions and recommendations.

Ken Hurwitz of ALTIUM INC. who had the foresight to authorize this project.

Len Turner of ALTIUM INC. played a pivotal role in this project. From the basic concept and through all of the changes that happened, Len realized the possibilities, and he always believed. He was always there when I needed him.

Jack Green of ALTIUM INC. for his interest and support. Without your help, Jack, this book might never have been started.

Antonia Inman of ALTIUM INC. provided information, marketing assistance and coordination.

Peter Smyth who did an excellent job on the cover.

And thanks to all those other unnamed individuals whose efforts contributed to this book.

USING MICRO CADAM

A Complete Reference and User Guide for the World's Most Productive CAD Software

By T. Daniel Smyth

SILVER PUBLISHING

SILVER PUBLISHING

TABLE OF CONTENTS

CHAPTER 1 INSTALLATION AND SETUP

STEP 1: INSTALL THE SOFTWARE: 1-2
STEP 2: QUICK CONFIGURE THE SOFTWARE: 1-3
STEP 3: MAKE MANUAL CHANGES TO THE C:\AUTOEXEC.CAD IF NECESSARY: 1-6
STEP 4: MAKE MANUAL CHANGES TO THE C:\CONFIG.CAD FILE IF NECESSARY: 1-8
STEP 5: COPY THE STARTUP FILES AND REBOOT THE SYSTEM: 1-10
STEP 6: TEST THE CONFIGURATION: 1-12
STEP 7: RUN MICRO CADAM: 1-14

ERROR CONDITIONS AND MESSAGES:AND WHAT TO DO IF MICRO CADAM WON'T START 1-15
FUNCTION KEY BOX DOES NOT RESPOND 1-15
MOUSE SEEMS TO HAVE NO EFFECT ON THE CURSOR 1-15
FLOATING POINT NOT LOADED 1-16
PROGRAM TOO BIG TO FIT IN MEMORY 1-16
GROUP LOCKED 1-17

MCINSTAL: ANOTHER WAY TO CONFIGURE YOUR SYSTEM! 1-18
MCOPT: CONFIGURING YOUR SYSTEM DEFAULTS! 1-27
PARAMETER DESCRIPTIONS 1-29

GRAPHIC BOARD DRIVERS: CONFIGURING YOUR MICRO CADAM DISPLAY! 1-32
INPUT DRIVERS: CONFIGURING YOUR MOUSE OR TABLET! 1-34
OUTPUT DRIVERS: CONFIGURING YOUR PRINTER OR PLOTTER! 1-36
SUPPORTED PLOTTERS AND PRINTERS: 1-41
NETWORKING: INSTALLING AND RUNNING MICRO CADAM ON A NETWORK! 1-42
DOCUMENTATION FILES 1-44
PRINTCAD & PRINTGL: SHAREWARE PLOTTING PGMS 1-45
Q387: MATH COPROCESSOR SHAREWARE PGM 1-45
RECLAIMING HARD DISK SPACE 1-46

CHAPTER 2 HOW DO I USE THIS BOOK

HOW DO I USE THIS BOOK? 2-2
THE MICRO CADAM MENU STRUCTURE 2-2
THE BOOK STRUCTURE 2-2
PRACTICE DRAWINGS 2-3
ROADMAPS 2-4
NODES AND NODEPATHS 2-4
DRAWING LOCATIONS 2-5
CHAPTER RECOMMENDATIONS FOR THE BEGINNER 2-5
CHAPTER RECOMMENDATIONS FOR THE EXPERIENCED CADAM USER 2-6

CHAPTER 3 INTRODUCTION

WHY A BOOK ABOUT MICRO CADAM? 3-1
WHO SHOULD USE THIS BOOK AND SOFTWARE? 3-1
WHAT IS IN THIS BOOK 3-2

CHAPTER 4 OVERVIEW

INTRODUCTION 4-1
USER'S ANALYSIS 4-2
FUNCTIONAL STRENGTHS OF MICRO CADAM 4-2
RELATED VIEWS 4-2
SPLINES 4-3
SUPPORT OF GROUPS 4-4
MORE EXTENSIVE DIMENSIONING CAPABILITIES 4-4
ELLIPSES AND OTHER TRUE CONICS 4-6
FLEXIBLE LINE CREATION 4-7
USER FRIENDLY RELIMITING 4-7
SIGNIFICANT CORNERING CAPABILITY 4-8
SYMBOLS 4-9
ABILITY TO ROTATE THE WINDOW 4-9
MULTIPLE USER-SELECTED ORIGINS 4-10
TEXT EDITING 4-10
OPERATIONS BY COLOR OR LINE TYPE 4-11
POWERFUL DISPLAY FEATURES 4-11
RELATIVE ANALYSIS 4-12
USER INTERFACE STRENGTHS 4-12
INPUT DEVICES FOR QUICK RESPONSE 4-13
USER-FRIENDLY MENU STRUCTURE 4-13
AUTOMATIC REPETITION OF OPERATIONS 4-14

ABILITY TO WINDOW DURING AN OPERATION 4-14
EASY TO USE DRAWING FILE MANAGEMENT 4-15
"INTELLIGENCE" 4-15
SINGLE-SCREEN INTERFACE 4-16
EASY POINTS CREATION AND SELECTION 4-16
COLOR HIGHLIGHTING 4-17
EASY COLOR ASSIGNMENT AND MODIFICATION 4-17
QUICK, EASY SCREEN REFRESH 4-18
ACCEPTS MATHEMATICAL EXPRESSION ENTRIES 4-18
COMPATIBILITY WITH OTHER SYSTEMS 4-19
CUSTOMER SUPPORT AND SOFTWARE MAINTENANCE 4-19

CONCLUSIONS 4-20

CHAPTER 5 CADAM BACKGROUND

CHRONOLOGICAL HISTORY: 5-1
CADAM TODAY 5-3
WHY FREE SOFTWARE? 5-5

CHAPTER 6 CONCEPTS

What is MICRO CADAM? 6-1
Electronic Drawing Area 6-1
Groups and Users 6-2
File Naming Conventions 6-3
Functions 6-4
Point Based CAD 6-5
Windows and Window size: 6-6
The Cursor 6-7
The Mouse Interface 6-7
Entering Information into MICRO CADAM: 6-9
SELECT (Sel) 6-10
INDICATE (Ind) 6-10
KEY (Key) 6-10
YN (YN) 6-11
2½D...What is it? 6-12
Auxiliary Views 6-13
Special Keys 6-14
Display Screen 6-14
Function Key Selection 6-19

CHAPTER 7 QUICKSTART

Starting MICRO CADAM 7-2
FKey POINT: 7-5
FKey LINE: 7-6
FKey FILE: 7-10
FKey WINDOW 7-12
ERASING ELEMENTS IN MICRO CADAM Cornerstone: 7-15
DRAWING CIRCLES IN MICRO CADAM Cornerstone: 7-16
FKey RELIMIT: 7-17
FKey CORNER: 7-20
FKey GROUP: 7-23
FKey TYPE: 7-29
FKey DIMENSION: 7-32
FKey NOTE and FKey SYMBOL for adding text to your drawings: 7-35

THE QUICKSTART DRAWING EXERCISE : 7-38

Part 1 - Drawing the Primary View (VIEW PV) and Front View (VIEW FR) 7-39
Part 2 - Dimensioning the Front View (VIEW FR) 7-61
Part 3 - Creating the Isometric View (VIEW IS) 7-68

BASIC FUNCTION KEYS:

CHAPTER 8 FKey FILE

STARTING MICRO CADAM AND CALLING UP AN EXISTING DRAWING 8-7
START MICRO CADAM 8-8
KEY IN THE GROUP,USER 8-9
TURN ON THE FKey (FUNCTION KEY) MENU 8-10
CALL UP AN EXISTING DRAWING 8-12
USE FKey WINDOW TO SEE THE ENTIRE DRAWING 8-13
SUBMENU / START / 8-15
SUBMENU / CALL / 8-19
THE FIRST DISPLAY PAGE 8-20
Submenu / FWD / BACK / (Display Page 1) 8-20
Submenu / CALL / (Display Page 1) 8-20
Submenu / DELETE / (Display Page 1) 8-22
Submenu / CHANGE / (Display Page 1) 8-22
CHANGING THE MODEL NAME 8-22
CHANGING THE MODEL FROM ONE USER TO ANOTHER 8-22
Submenu / USER / (Display Page 1) 8-24
Submenu / RETURN / (Display Page 1) 8-24
Submenu / LEV3 / (Display Page 1) 8-25

Submenu / READ ONLY / (Display Page 3) 8-25
Submenu / RESET / (Display Page 3) 8-25
Submenu / SET PASSWORD / (Display Page 3) 8-25
Submenu / NO PASSWORD / (Display Page 3) 8-26
Submenu / SHOTXT / (Display Page 1) 8-27
SUBMENU / FILE / 8-29
SUBMENU / USER / 8-31
SUBMENU / TEXT / 8-33
SUBMENU / UNITS / 8-35
UNITS 8-37
DIMENSION 8-37
VIEW CONV 8-37
HATCH/FILL 8-38
MAINFRAME COMPATIBILITY 8-38
SUBMENU / PLOT / 8-39
A SUMMARY OF ACTIONS (WITH RESULTS) REQUIRED TO ADD PLOT DATA TO A DRAWING 8-40
ANGLE 8-41
LOAD PT 8-41
SCL 8-41
NOTE SCL 8-42
EXAMPLES OF HOW NOTE SCL AFFECTS THE PLOTTED NOTE SIZE 8-42
HEIGHT 8-42
WIDTH 8-42
ERASE 8-42
FILE 8-42
RTN 8-42
SUBMENU / DRIVE / 8-43
SUBMENU / LOGOFF / 8-45

CHAPTER 9 FKey WINDOW

ACCESSING FKEY WINDOW 9-1
ELEMENTS and WORDS 9-2
THE WINDOW DISPLAY SCREEN: 9-4
SETTING THE SUBMENU UNDERLINE DEFAULT: 9-4
FUNCTION KEY WINDOW SUBMENU OPTIONS: 9-6
SUBMENU / MOVE / 9-9
IND CTR: (i.e. indicate center) 9-10
SEL ANY: (i.e. select any) 9-11
KEY X,Y,SIZE 9-11
KEY SIZE 9-11
YN AXIS 9-11
SUBMENU / SIZE / 9-13
IND SIZE: (Indicate size) 9-14
KEY SIZE 9-16
KEY X,Y,SIZE 9-16
SEL ELEM: (Select Element) 9-16
YN SIZE=1 9-16
SUBMENU / BOX / 9-17
IND CORNER: (Indicate corner) 9-18

SUBMENU / TURN / 9-21
SEL ELEMENT: (Select element) 9-22
IND ANGLE: (Indicate angle) 9-22
KEY ANGLE 9-22
YN CURRENT AXIS 9-22
SUBMENU / OVRLY / 9-23
KEY FILENAME 9-24
SUBMENU / SET / 9-27
TO SET A WINDOW SIZE AND LOCATION INTO A SET NUMBER 9-28
TO RECALL A WINDOW SIZE AND LOCATION FROM A SET NUMBER 9-28
SUBMENU / PLOT / 9-29

CHAPTER 10 FKey ANALYZE

INTRODUCTION TO ANALYZE 10-1
MENU ITEM TREE DESCRIPTION 10-1

SUBMENU / PT-ELEM / BEGINNER SECTION 10-3

1) ANALYZING A POINT 10-6
2) ANALYZING A LINE 10-7
3) ANALYZING TWO LINES RELATIVE TO EACH OTHER 10-8
4) ANALYZING A CIRCLE 10-9
5) ANALYZING AN ARC 10-10
6) ANALYZING AN ELLIPSE 10-11
7) ANALYZING A SPLINE 10-12
8) ANALYZING A SPLINE WITH A TANGENT VECTOR 10-13
9) ANALYZING A LINEAR SPLINE 10-15
10) ANALYZING A CONIC 10-16
11) ANALYZING AN AXIS 10-17
12) ANALYZING SYMBOLS, DITTOS, NOTES AND DIMENSIONS 10-21
13) ANALYZING THE DISTANCE BETWEEN TWO ELEMENTS 10-23

SUBMENU / SECTION /ADVANCED SECTION 10-25

SECTION PROPERTY VARIABLE NAMES 10-27
1) GENERAL EXAMPLE OF SECTION PROPERTIES CALCULATED BY THE BOUNDARY ELEMENT METHOD 10-29
2) A SECTION PROPERTIES EXAMPLE WITH COMMON STRUCTURAL SECTIONS 10-32
3) AN EXAMPLE OF SECTION PROPERTIES USED TO CALCULATE A VOLUME ABOUT THE CENTER OF REVOLUTION 10-34
4) GENERAL EXAMPLE OF SECTION PROPERTIES CALCULATED BY THE CENTERLINE METHOD 10-36
5) HOW TO CREATE YOUR OWN CUSTOM SECTION ANALYSIS FORMATS 10-38

CREATING GEOMETRY:

CHAPTER 11 FKey POINT

FUNCTION KEY POINT SUBMENU OPTIONS: 11-2

SUBMENU / POINTS / 11-5
FKEY POINT / POINTS / ACTION SUMMARY 11-7

SUBMENU / POINTS / BEGINNER SECTION 11-9

1) ABSOLUTE POINT 11-11
2) RELATIVE POINT 11-12
3) APPROXIMATE POINT 11-13
4) POINT CREATED HALFWAY BETWEEN TWO EXISTING POINTS 11-14
5) POINT PROJECTED ONTO AN ELEMENT 11-15
6) POINT CREATED AT THE INTERSECTION OF TWO ELEMENTS 11-16

SUBMENU / POINTS / ADVANCED SECTION 11-17

7) POINT CREATED AT THE CORNER OF TWO EXISTING POINTS 11-19
8) POINT DEFINED ON THE END POINTS OF LINES 11-20
9) POINT CREATED ON ELEMENT AT ELEVATION Y 11-21

SUBMENU / SPACE / 11-23
FKEY POINT / SPACE / ACTION SUMMARY 11-25

SUBMENU / SPACE / BEGINNER 11-27

1) TO CREATE POINTS EQUALLY SPACED ALONG THE ENTIRE ELEMENT LENGTH 11-29
2) TO CREATE DITTOS EQUALLY SPACED ALONG ENTIRE ELEMENT LENGTH 11-30

SUBMENU / SPACE / ADVANCED 11-31

3) TO CREATE POINTS EQUALLY SPACED ALONG ENTIRE ELEMENT CHAIN 11-33
4) TO CREATE DITTOS EQUALLY SPACED ALONG ENTIRE ELEMENT CHAIN 11-35
5) TO CREATE POINTS EQUALLY SPACED ALONG AN ELEMENT LENGTH BETWEEN TWO POINTS ON THE ELEMENT 11-37
6) TO CREATE POINTS GENERATED ALONG AN ELEMENT AT A FIXED TRUE LENGTH 11-38
7) TO CREATE POINTS GENERATED ALONG AN ELEMENT AT SPACES LESS THAN OR EQUAL TO A KEYED LENGTH 11-39

SUBMENU / DEF PTS / 11-41
FKEY / POINT / DEF PTS / ACTION SUMMARY 11-43

SUBMENU / DEF PTS / BEGINNER SECTION 11-45

1) DEF PTS 11-47

SUBMENU / GRID / 11-49
NORMAL / LOCKON 11-50

SHO / NOSHO 11-50
ANAL 11-51
ERASE 11-51
FKEY / POINT / GRID / ACTION SUMMARY 11-52

SUBMENU / GRID / ADVANCED SECTION 11-53

1) GRID CREATED AT CONSTANT XY SPACING (i.e. a single entry since X and Y are the same) 11-55
2) GRID CREATED AT CONSTANT X,Y SPACING (i.e. one entry for X and one entry for Y since they are different) 11-56
3) GRID CREATED AT VARIABLE X and Y SPACING (i.e. X steps are X1,X2,X3...X20 and Y steps are Y1,Y2,Y3...Y20) 11-57

CHAPTER 12 FKey LINE

MENU ITEM TREE DESCRIPTION: 12-2

SUBMENU / HORZ / 12-7

SUBMENU / HORZ / BEGINNER SECTION 12-9

1) AN UNLIMITED LENGTH HORIZONTAL LINE DRAWN AT ELEVATION Y 12-11
2) AN UNLIMITED LENGTH HORIZONTAL LINE DRAWN AT INDICATED LOCATION . . 12-12
3) AN UNLIMITED LENGTH HORIZONTAL LINE DRAWN THROUGH A POINT 12-14
4) AN UNLIMITED LENGTH HORIZONTAL LINE DRAWN TANGENT TO A CIRCLE 12-15
5A) A FIXED LENGTH HORIZONTAL LINE STARTING AT A POINT WITH A KEYED LENGTH IN AN INDICATED DIRECTION 12-16
5B) A FIXED LENGTH HORIZONTAL LINE STARTING AT A POINT AND CONTINUING UNTIL IT CROSSES ANOTHER ELEMENT 12-18
5C) A FIXED LENGTH HORIZONTAL LINE STARTING TANGENT TO A CIRCLE WITH A KEYED LENGTH AND RUNNING IN AN INDICATED DIRECTION 12-19
6A) A HORIZONTAL CENTER LINE WHICH IS CENTERED ON A POINT 12-21

SUBMENU / HORZ / ADVANCED SECTION 12-23

7) AN UNLIMITED LENGTH HORIZONTAL LINE DRAWN THROUGH THE END OF ANOTHER LINE 12-25
8) AN UNLIMITED LENGTH HORIZONTAL LINE DRAWN THROUGH THE MIDDLE OF ANOTHER LINE 12-26
5D) A FIXED LENGTH HORIZONTAL LINE DRAWN THROUGH THE END POINT OF ANOTHER LINE 12-28
5E) A FIXED LENGTH HORIZONTAL LINE DRAWN THROUGH THE MIDDLE OF ANOTHER LINE 12-30
6B) A HORIZONTAL CENTER LINE DRAWN THROUGH THE END OF ANOTHER LINE . . 12-32
6C) A HORIZONTAL CENTER LINE DRAWN THROUGH THE MIDDLE OF ANOTHER LINE 12-33

FKEY LINE /HORZ/ ACTION SUMMARY 12-34

SUBMENU / VERT / 12-35

SUBMENU / VERT / BEGINNER SECTION 12-37

1) AN UNLIMITED LENGTH VERTICAL LINE DRAWN AT POSITION X 12-39
2) AN UNLIMITED LENGTH VERTICAL LINE DRAWN AT INDICATED LOCATION 12-40
3) AN UNLIMITED LENGTH VERTICAL LINE DRAWN THROUGH A POINT 12-42
4) AN UNLIMITED LENGTH VERTICAL LINE DRAWN TANGENT TO A CIRCLE 12-43
5A) A FIXED LENGTH VERTICAL LINE STARTING AT A POINT WITH A KEYED LENGTH IN AN INDICATED DIRECTION 12-44
5B) A FIXED LENGTH VERTICAL LINE STARTING AT A POINT AND CONTINUING UNTIL IT CROSSES ANOTHER ELEMENT 12-46
5C) A FIXED LENGTH VERTICAL LINE STARTING TANGENT TO A CIRCLE WITH A KEYED LENGTH AND RUNNING IN AN INDICATED DIRECTION 12-47
6A) A VERTICAL CENTER LINE WHICH IS CENTERED ON A POINT 12-49

SUBMENU / VERT / ADVANCED SECTION 12-51

7) AN UNLIMITED LENGTH VERTICAL LINE DRAWN THROUGH THE END OF ANOTHER LINE 12-53
8) AN UNLIMITED LENGTH VERTICAL LINE DRAWN THROUGH THE MIDDLE OF ANOTHER LINE 12-54
5D) A FIXED LENGTH VERTICAL LINE DRAWN THROUGH THE END POINT OF ANOTHER LINE 12-55
5E) A FIXED LENGTH VERTICAL LINE DRAWN THROUGH THE MIDDLE OF ANOTHER LINE 12-57
6B) A VERTICAL CENTER LINE DRAWN THROUGH THE END OF ANOTHER LINE 12-59
6C) A VERTICAL CENTER LINE DRAWN THROUGH THE MIDDLE OF ANOTHER LINE . 12-60

FKEY LINE /VERT/ ACTION SUMMARY 12-61

SUBMENU / PARAL / 12-63

SUBMENU / PARAL / BEGINNER SECTION 12-65

1) AN UNLIMITED LENGTH PARALLEL LINE DRAWN THROUGH POSITION X,Y 12-67
2) AN UNLIMITED LENGTH PARALLEL LINE DRAWN THROUGH AN INDICATED LOCATION 12-68
3) AN UNLIMITED LENGTH PARALLEL LINE DRAWN THROUGH A POINT 12-69
4) AN UNLIMITED LENGTH PARALLEL LINE DRAWN TANGENT TO A CIRCLE 12-70
5A) A FIXED LENGTH PARALLEL LINE STARTING AT A POINT WITH A KEYED LENGTH IN AN INDICATED DIRECTION 12-71
5B) A FIXED LENGTH PARALLEL LINE STARTING AT A POINT AND CONTINUING UNTIL IT CROSSES ANOTHER ELEMENT 12-73
5C) A FIXED LENGTH PARALLEL LINE STARTING TANGENT TO A CIRCLE WITH A KEYED LENGTH AND RUNNING IN AN INDICATED DIRECTION 12-75
6A) A PARALLEL CENTER LINE WHICH IS CENTERED ON A POINT: 12-77

SUBMENU / PARAL / ADVANCED SECTION 12-79

7) AN UNLIMITED LENGTH PARALLEL LINE DRAWN THROUGH THE END OF ANOTHER LIN 12-81
8) AN UNLIMITED LENGTH PARALLEL LINE DRAWN THROUGH THE MIDDLE OF ANOTHER LINE 12-82
5D) A FIXED LENGTH PARALLEL LINE DRAWN THROUGH THE END POINT OF ANOTHER LINE 12-83
5E) A FIXED LENGTH PARALLEL LINE DRAWN THROUGH THE MIDDLE OF ANOTHER

LINE 12-85
6B) A PARALLEL CENTER LINE DRAWN THROUGH THE END OF ANOTHER LINE 12-87
6C) A PARALLEL CENTER LINE DRAWN THROUGH THE MIDDLE OF ANOTHER LINE 12-89
FKEY LINE /PARAL/ ACTION SUMMARY 12-91

SUBMENU / NORM / 12-93

SUBMENU / NORM / BEGINNER SECTION 12-95

1) AN UNLIMITED LENGTH NORMAL LINE DRAWN THROUGH POSITION X, ... 12-97
2) AN UNLIMITED LENGTH NORMAL LINE DRAWN THROUGH AN INDICATED LOCATION 12-98
3) AN UNLIMITED LENGTH NORMAL LINE DRAWN THROUGH A POINT 12-99
4) AN UNLIMITED LENGTH NORMAL LINE DRAWN TANGENT TO A CIRCLE 12-100
5A) A FIXED LENGTH NORMAL LINE STARTING AT A POINT WITH A KEYED LENGTH IN AN INDICATED DIRECTION 12-101
5B) A FIXED LENGTH NORMAL LINE STARTING AT A POINT AND CONTINUING UNTIL IT CROSSES ANOTHER ELEMENT 12-103
5C) A FIXED LENGTH NORMAL LINE STARTING TANGENT TO A CIRCLE WITH A KEYED LENGTH AND RUNNING IN AN INDICATED DIRECTION 12-105
6A) A NORMAL CENTER LINE WHICH IS CENTERED ON A POINT 12-107

SUBMENU / NORM / ADVANCED SECTION 12-109

7) AN UNLIMITED LENGTH NORMAL LINE DRAWN THROUGH THE END OF ANOTHER LINE 12-111
8) AN UNLIMITED LENGTH NORMAL LINE DRAWN THROUGH THE MIDDLE OF ANOTHER LINE 12-112
5D) A FIXED LENGTH NORMAL LINE DRAWN THROUGH THE END POINT OF ANOTHER LINE 12-113
5E) A FIXED LENGTH NORMAL LINE DRAWN THROUGH THE MIDDLE OF ANOTHER LINE 12-115
6B) A NORMAL CENTER LINE DRAWN THROUGH THE END OF ANOTHER LINE 12-117
6C) A NORMAL CENTER LINE DRAWN THROUGH THE MIDDLE OF ANOTHER LINE . 12-119
FKEY LINE /NORM/ ACTION SUMMARY 12-121

SUBMENU / ANGLE / 12-123

SUBMENU / ANGLE / BEGINNER SECTION 12-127

1A) AN UNLIMITED LENGTH ANGLE LINE DRAWN THROUGH POSITION X,Y AT AN ANGLE THAT IS MEASURED FROM THE X AXIS 12-129
1B) AN UNLIMITED LENGTH ANGLE LINE DRAWN THROUGH POSITION X,Y AT AN ANGLE THAT IS MEASURED RELATIVE TO ANOTHER LINE 12-130
2) AN UNLIMITED LENGTH ANGLE LINE DRAWN THROUGH AN INDICATED LOCATION AT AN ANGLE THAT IS MEASURED FROM THE X AXIS 12-132
3) AN UNLIMITED LENGTH ANGLE LINE DRAWN THROUGH A POINT AT AN ANGLE THAT IS MEASURED FROM THE X AXIS 12-133
4A) AN UNLIMITED LENGTH ANGLE LINE DRAWN TANGENT TO A CIRCLE AT AN ANGLE MEASURED FROM THE X AXIS 12-134
4B) AN UNLIMITED LENGTH ANGLE LINE DRAWN TANGENT TO A CIRCLE AT AN ANGLE MEASURED RELATIVE TO ANOTHER LINE 12-135
5A) A FIXED LENGTH ANGLE LINE STARTING AT A POINT WITH A KEYED LENGTH IN AN INDICATED DIRECTION AT AN ANGLE THAT IS MEASURED FROM THE

X AXIS 12-137
5B) A FIXED LENGTH ANGLE LINE STARTING AT A POINT, AT AN ANGLE MEASURED FROM THE X AXIS, AND CONTINUING UNTIL IT CROSSES ANOTHER ELEMENT 12-139
5C) A FIXED LENGTH ANGLE LINE STARTING TANGENT TO A CIRCLE, AT AN ANGLE THAT IS MEASURED FROM THE X AXIS, WITH A KEYED LENGTH AND RUNNING IN AN INDICATED DIRECTION 12-141
5D) A FIXED LENGTH ANGLE LINE STARTING TANGENT TO A CIRCLE, AT AN ANGLE THAT IS MEASURED RELATIVE TO ANOTHER LINE, WITH A KEYED LENGTH AND RUNNING IN AN INDICATED DIRECTION 12-143
6A) AN ANGLE CENTER LINE WHICH IS CENTERED ON A POINT, AT AN ANGLE MEASURED FROM THE X AXIS 12-145

SUBMENU / ANGLE / ADVANCED SECTION 12-147

7) AN UNLIMITED LENGTH ANGLE LINE DRAWN THROUGH THE END OF ANOTHER LINE AT AN ANGLE THAT IS MEASURED FROM THE X AXIS 12-149
8) AN UNLIMITED LENGTH ANGLE LINE DRAWN THROUGH THE MIDDLE OF ANOTHER LINE AT AN ANGLE THAT IS MEASURED FROM THE X AXIS 12-151
5E) A FIXED LENGTH ANGLE LINE DRAWN THROUGH THE END OF ANOTHER LINE AT AN ANGLE MEASURED FROM THE X AXIS 12-153
6B) AN ANGLE CENTER LINE DRAWN THROUGH THE END OF ANOTHER LINE AT AN ANGLE MEASURED FROM THE X AXIS 12-155
6C) AN ANGLE CENTER LINE DRAWN THROUGH THE MIDDLE OF ANOTHER LINE, AT AN ANGLE MEASURED FROM THE X AXIS 12-157

FKEY LINE /ANGLE/ ACTION SUMMARY 12-159

SUBMENU / PT-PT / 12-161

SUBMENU / PT-PT / BEGINNER SECTION 12-163

1A) A FIXED LENGTH PT-PT LINE DRAWN BETWEEN TWO X,Y POSITIONS 12-165
1B) A FIXED LENGTH PT-PT LINE DRAWN BETWEEN TWO INDICATED POSITIONS . . . 12-166
1C) A FIXED LENGTH PT-PT LINE DRAWN BETWEEN TWO POINTS 12-167
1D) A FIXED LENGTH PT-PT LINE DRAWN TANGENT TO TWO CIRCLES 12-168
1E) A FIXED LENGTH PT-PT LINE DRAWN FROM ONE POINT TANGENT TO A CIRCLE 12-169
1F) A CHAIN OF FIXED LENGTH PT-PT LINES CREATED BY CONNECTING A SERIES OF POINTS 12-170
2A) AN UNLIMITED LENGTH PT-PT LINE DRAWN THROUGH TWO POINTS 12-172
2B) AN UNLIMITED LENGTH PT-PT LINE DRAWN TANGENT TO TWO CIRCLES 12-173

SUBMENU / PT-PT / ADVANCED SECTION 12-175

1G) A FIXED LENGTH PT-PT LINE DRAWN FROM THE MIDDLE OF ONE LINE TO THE END OF ANOTHER LINE 12-177
2C) AN UNLIMITED LENGTH PT-PT LINE DRAWN BETWEEN THE MIDDLE OF TWO LINES 12-179
3) A FIXED LENGTH PT-PT EXTENSION LINE DRAWN BETWEEN TWO POINTS 12-181

FKEY LINE /PT-PT/ ACTION SUMMARY 12-182

SUBMENU / MLT / 12-183

CHAPTER 13

FKey CIRCLE

MENU ITEM TREE DESCRIPTION 13-2
SUBMENU / CIRCLE / 13-3

SUBMENU /CIRCLE/ BEGINNER SECTION 13-5

1) CIRCLE DRAWN AT CO-ORDINATES X,Y WITH RADIUS R 13-7
2) CIRCLE CENTERED ON POINT AT KEYED RADIUS 13-8
3) CIRCLE DRAWN THROUGH THREE EXISTING POINTS 13-9
4) CIRCLE DRAWN WITH 1ST POINT BEING THE CENTER POINT AND THE 2ND POINT BEING ON THE CIRCUMFERENCE 13-10
5) CIRCLE DRAWN TANGENT TO 3 LINES 13-11
6) CIRCLE RADIUS CHANGED 13-12

SUBMENU /CIRCLE/ ADVANCED SECTION 13-13

7) CIRCLE DRAWN THROUGH 2 POINTS ON THE CIRCUMFERENCE WITH KEYED RADIUS 13-15
8) CIRCLE CENTERED ON POINT AND TANGENT TO LINE 13-16
9) CIRCLE CENTERED ON EXISTING CIRCLE AND TANGENT TO LINE 13-17
10) CIRCLE REF CENTER OF EXISTING CIRCLE AND TANGENT TO LINE AT KEYED RADIUS 13-18
11) CIRCLE TANGENT TO 2 LINES AT KEYED RADIUS 13-19
12) CIRCLE DRAWN THROUGH POINT, TANGENT TO LINE AT KEYED RADIUS 13-20

FKEY CIRCLE /CIRCLE/ ACTION SUMMARY 13-21

SUBMENU /CIRCLE/ (ARC OPTION) 13-23

(ARC OPTION) BEGINNER SECTION 13-25

1) ARC DRAWN CCW THROUGH 3 POINTS 13-27
2) ARC DRAWN THROUGH 2 POINTS AT KEYED RADIUS 13-28

(ARC OPTION) ADVANCED SECTION 13-29

3A) ARC DRAWN AT CO-ORDINATE X,Y WITH RADIUS R AT KEYED ANGLE 1 AND RUNNING CCW TO KEYED ANGLE 2 13-31
3B) ARC DRAWN AT CO-ORDINATE X,Y WITH RADIUS R AT ANGLE 1 DEFINED BY POINT AND RUNNING CCW TO ANGLE 2 DEFINED BY A POINT 13-32
4A) ARC DRAWN TANGENT TO LINE 1, LINE 2 AND LINE 3 WITH INSCRIBED CIRCLE RADIUS 13-34
4B) ARC DRAWN TANGENT TO LINE 1, AND LINE 2 WITH KEYED RADIUS 13-35
5) ARC DRAWN THROUGH A POINT TANGENT TO A LINE AT A KEYED RADIUS 13-36

FKEY CIRCLE /CIRCLE/ (ARC Option) ACTION SUMMARY 13-37

SUBMENU / ELLIPSE / 13-39
SUBMENU / ELLIPSE / BEGINNER SECTION 13-42

1) AN ELLIPSE CREATED AT A ROTATION ANGLE OF 0 DEGREES 13-44

2) ELLIPSE CREATED AT A ROTATION ANGLE THAT HAS BEEN KEYED IN 13-45
3) ELLIPSE CREATED AT THE SAME ROTATION ANGLE AS THE ANGLE OF AN EXISTING LINE 13-46
4) ELLIPSE CREATED BY REFERENCING AN EXISTING ELLIPSE 13-47

FKEY CIRCLE /ELLIPSE/ ACTION SUMMARY 13-48

CHAPTER 14 FKey SPLINE

INTRODUCTION TO SPLINES 14-1
INTRODUCTION TO CONICS 14-2
SELECTING, INDICATING OR KEYING A SHOULDER POINT 14-4
SELECTING A TANGENT LINE 14-5
KEYING IN A RATIO 14-5
INTRODUCTION TO LINEAR SPLINES 14-5
INTRODUCTION TO CONVERT 14-5
MENU ITEM TREE DESCRIPTION 14-7

SPLINE 14-8

SPLINE BEGINNER SECTION 14-11

1A) A SPLINE CREATED THROUGH EXISTING POINTS, WITH THE END POINTS RELAXED 14-13
3) A LINEAR SPLINE CREATED THROUGH EXISTING POINTS 14-14
4) AN ELLIPSE CONVERTED TO A SPLINE 14-15

SPLINE ADVANCED SECTION 14-17

1B) A SPLINE CREATED THROUGH EXISTING POINTS, WITH THE STARTING AND ENDING SLOPES LOCKED AT AN ANGLE 14-19
1C) A SPLINE CREATED BETWEEN TWO EXISTING ELEMENTS, WITH THE SPLINE MATCHING SLOPES AT THE ENDPOINTS OF THE EXISTING ELEMENTS 14-21
2A) A CONIC CREATED BY SELECTING A SHOULDER POINT 14-23
2B) A CONIC CREATED BY SELECTING A TANGENT LINE 14-25
2C) A CONIC CREATED BY KEYING A RATIO 14-27

FKEY SPLINE ACTION SUMMARY 14-28

MODIFYING GEOMETRY:

CHAPTER 15 FKey RELIMIT

SUBMENU /ENDS/ and SUBMENU //NORMAL/, /CHAIN MODE/ 15-7
FKey RELIMIT and Submenu /ENDS/ 15-8

A) TO RELIMIT ELEMENTS BY SELECTING INTERSECTING ELEMENTS, FOLLOW THESE STEPS 15-8
B) TO RELIMIT ELEMENTS BY INDICATING THEIR END POSITION, FOLLOW THESE STEPS 15-9
C) TO RELIMIT ELEMENTS USING THE CHAIN MODE, FOLLOW THESE STEPS 15-10
D) TO RELIMIT ELEMENTS USING THE GROUP MODE OPTION, FOLLOW THESE STEPS 15-11

SUBMENU /BREAK/, /CLOSE/ 15-13

E) TO BREAK A SINGLE ELEMENT INTO TWO ELEMENTS, FOLLOW THESE STEPS . . . 15-14
F) TO BREAK AROUND AN ELEMENT, FOLLOW THESE STEPS 15-15
G) TO BREAK INSIDE AN ELEMENT, FOLLOW THESE STEPS 15-16
H) TO CLOSE AN ELEMENT, FOLLOW THESE STEPS 15-17

FKEY / RELIMIT / ACTION SUMMARY 15-18

CHAPTER 16 FKey CORNER

FUNCTION KEY CORNER SUBMENU OPTIONS 16-2

SUBMENU /CORNER/ 16-3
SUBMENU /CORNER/ 16-5
A) TO CORNER TWO ELEMENTS 16-5
B) TO CREATE A CORNER RADIUS USING A TANGENT ELEMENT 16-8
C) CREATE A SLOT USING FKey CORNER 16-10

SUBMENU /CHAMFER/ 16-11
FKey CORNER Submenu /CHAMFER/ 16-12

CHAPTER 17 FKey OFFSET

INTRODUCTION TO OFFSET 17-1
MENU ITEM TREE DESCRIPTION 17-2
OFFSET 17-3

OFFSET BEGINNER 1 SECTION 17-5

1A) A LINE OFFSET A KEYED DISTANCE IN AN INDICATED DIRECTION 17-7
1B) A LINE OFFSET MULTIPLE TIMES THE SAME KEYED DISTANCE IN THE SAME INDICATED DIRECTION 17-9
1C) A LINE OFFSET THROUGH A POINT 17-11
1D) A LINE OFFSET TANGENT TO A CIRCLE 17-12
1E) A LINE REPEATEDLY OFFSET DIFFERENT KEYED DISTANCES IN AN INDICATED DIRECTION 17-13
1F) A NOTE OFFSET A KEYED DISTANCE IN AN INDICATED DIRECTION 17-15

OFFSET BEGINNER 2 SECTION 17-17

2A) A LINE OFFSET BOTH SIDES BY A KEYED DISTANCE 17-19
2B) A CIRCLE OFFSET BOTH SIDES BY A KEYED DISTANCE 17-20

FKey OFFSET BEGINNER 3 SECTION 17-21

3A) A CHAIN OF ELEMENTS OFFSET A KEYED DISTANCE IN AN INDICATED DIRECTION 17-23

OFFSET BEGINNER 4 SECTION 17-25

4A) A CHAIN OF ELEMENTS OFFSET BOTH SIDES A KEYED DISTANCE 17-27

FKEY OFFSET ACTION SUMMARY 17-29

CHAPTER 18 FKey GROUP

FUNCTION KEY GROUP SUBMENU OPTIONS 18-2

GROUP SUBMENU /MIRROR/ BEGINNER SECTION 18-7

A) BEGIN THE MIRROR PROCEDURE 18-9
B) SELECT ANY MIRROR OPTIONS YOU MAY WANT 18-9
C) PERFORM THE MIRROR ACTION 18-10

GROUP SUBMENU /TRANSL/ BEGINNER SECTION 18-13

A) BEGIN THE TRANSLATION PROCEDURE 18-14
B) DEFINE THE PIVOT POINT 18-16

C) DEFINE THE TRANSLATE OPTIONS 18-17
D) DETERMINE WHICH TRANSLATE OPERATION YOU WANT TO PERFORM 18-18
E) YOU DECIDE YOU WANT TO MOVE THE ELEMENTS TO A DIFFERENT LOCATION . 18-18
F) YOU DECIDE YOU WANT TO TURN THE ELEMENTS TO A DIFFERENT ANGLE 18-24
G) YOU DECIDE YOU WANT TO CHANGE THE SCALE OF THE ELEMENTS 18-25

SUBMENU /TRAP/ BEGINNER SECTION 18-27

A) BEGIN THE TRAP PROCEDURE 18-29
B) YOU DECIDE YOU WANT TO TRAP BY RECTANGLE 18-30
C) YOU DECIDE YOU WANT TO TRAP BY POLYGON 18-31
D) YOU DECIDE YOU WANT TO TRAP BY WINDOW 18-33
E) YOU DECIDE YOU WANT TO TRAP EVERYTHING IN THE ACTIVE VIEW 18-34

SUBMENU /SETS/ ADVANCED SECTION 18-37

A) CREATING A SET FROM EXISTING GEOMETRY 18-38
B) ADDING NEW GEOMETRY INTO A SET AS IT IS CREATED 18-39
C) INTERROGATING EXISTING GEOMETRY TO DETERMINE WHICH SET IT BELONGS TO 18-39
D) LOOK AT ALL OF THE EXISTING SETS 18-40
E) DELETE AN EXISTING SET 18-40
F) MODIFY AN EXISTING SET 18-40
G) ADD A SET MEMBER TO AN EXISTING SET 18-41
H) REMOVE A SET MEMBER FROM AN EXISTING SET 18-41
I) CHANGE A SET INTO A TEMPORARY GROUP 18-42
J) CHANGE A SET NAME 18-42

SUBMENU /ATTRIBUTE/ ADVANCED SECTION 18-43

A) TO APPLY ATTRIBUTE DATA BY SELECTING INDIVIDUAL ELEMENTS 18-44
B) TO APPLY ATTRIBUTE DATA TO A TEMPORARY GROUP OF ELEMENTS 18-45
C) TO APPLY ATTRIBUTE DATA TO A SET OF ELEMENTS 18-45
D) TO DELETE ATTRIBUTE DATA 18-46
E) TO EDIT ATTRIBUTE DATA 18-46
F) TO QUERY THE ATTRIBUTE DATA 18-47

CHAPTER 19 FKey TYPE

FUNCTION KEY TYPE SUBMENU OPTIONS 19-2

SUBMENU STYLE 19-2
SUBMENU COLOR 19-3

SUBMENU / STYLE / 19-5

TO CHANGE THE LINE STYLE, FOLLOW THESE STEPS 19-6

SUBMENU / COLOR / 19-9

THE ACTIVE FUNCTION KEY 19-10

THE SUBMENU DISPLAY FOR THE ACTIVE FUNCTION KEY 19-10
THE ACTIVE COLOR 19-11
THE MENU PROMPT 19-11
THE MODE STATUS 19-11
THE COLOR MEMORIES 19-11
THE CURRENT COLOR DEFINITION 19-11
THE UP OR DOWN MODIFIERS FOR COLOR DEFINITION 19-12
THE DEFAULT TABLE 19-12
THE SPECIAL TABLE DEFINITION 19-12
TO ADD COLOR TO AN ELEMENT FOLLOW THESE STEPS 19-14
TO REMOVE COLOR FROM AN ELEMENT FOLLOW THESE STEPS 19-15
TO FORM A GROUP FROM ALL ELEMENTS THAT HAVE THE SAME COLOR FOLLOW THESE STEPS 19-15
TO COPY THE COLOR DEFINITIONS FROM ANOTHER DRAWING TO YOUR ACTIVE DRAWING FOLLOW THESE STEPS 19-16
TO TURN THE MODE OPTION ON OR OFF, FOLLOW THESE STEPS 19-17
TO TURN THE SIDE MENU ON OR OFF, FOLLOW THESE STEPS 19-17
TO DISPLAY ALL ELEMENTS THAT HAVE THE ACTIVE COLOR, FOLLOW THESE STEPS 19-18

CHAPTER 20 FKey SHOW

FUNCTION KEY SHOW SUBMENU OPTIONS 20-1

SUBMENU / SHO / AND SUBMENU / NO SHO / 20-5

TO TOGGLE BETWEEN THE SHOW WORLD AND THE NO SHOW WORLD 20-8
TO MOVE SELECTED ELEMENTS FROM THE SHOW WORLD TO THE NO SHOW WORLD 20-8
TO MOVE A GROUP OF ELEMENTS FROM THE SHOW WORLD TO THE NO SHOW WORLD 20-9
TO MOVE SELECTED ELEMENTS FROM THE NO SHOW WORLD TO THE SHOW WORLD 20-9
TO MOVE ALL ELEMENTS FROM THE NO SHOW WORLD TO THE SHOW WORLD 20-10

SUBMENU / ERASE / 20-13
SUBMENU / PACK / 20-15
SUBMENU / ERS PTS / 20-19
SUBMENU / SHO DIM / 20-19
SUBMENU / NO SHO DIM / 20-19

SUBMENU / ERS DIM / 20-19
SUBMENU / ERS PTS / 20-20
1) TO ERASE ALL POINTS IN THE ACTIVE VIEW 20-20
2) TO ERASE ALL POINTS IN A GROUP 20-20

SUBMENU / SHO DIM / AND / NO SHO DIM / 20-22

SUBMENU / ERS DIM / 20-23
TO ERASE ALL DIMENSIONS IN THE ACTIVE VIEW 20-23
TO ERASE ALL ANNOTATION IN THE ACTIVE VIEW 20-23
TO ERASE ALL DIMENSIONS AND ANNOTATION IN ALL VIEWS 20-24

CHAPTER 21

FKey ELEC

FUNCTION KEY ELEC SUBMENU OPTIONS 21-2

SUBMENU /SCHEMATICS/ /UTILS/ /DITTO REPL/ 21-5

A) SELECT INDIVIDUAL DITTOS TO REPLACE WITH HARD GEOMETRY 21-6
B) REPLACE ALL DITTOS IN A GROUP WITH HARD GEOMETRY 21-6

SUBMENU /SCHEMATICS/ /TEXT EDIT/ 21-9

A) FIND A TEXT STRING 21-11
B) CHANGE A TEXT STRING 21-12

CHAPTER 22 FKey NOTE

FUNCTION KEY NOTE SUBMENU OPTIONS 22-2

INTRODUCTION 22-7
1) SPECIAL CHARACTERS FOR FKEY NOTE 22-11
2) EXTENDED CHARACTERS FOR FKEY NOTE 22-13

SUBMENU /POSN/ 22-15

3) NOTE ALIGNMENT POSITIONS (FKey NOTE submenu /POSN/) 22-16
4) NOTE JUSTIFICATION (FKey NOTE submenu /POSN/) 22-17

SUBMENU /PARMS/ 22-19

5) NOTE CHARACTER WIDTH, VERTICAL SPACING, HORIZONTAL SPACING, AND CHARACTER HEIGHT (FKey NOTE submenu /PARMS/ (/CWID/ /VSP/ /HSP/ /CHT/)) 22-20
6) NOTE CHARACTER WIDTH WITH RATIO OPTION, (FKey NOTE submenu /PARMS/ /CWID/) . . . 22-21
7) NOTE CHARACTER TO CHARACTER SPACING WITH RATIO OPTION, (FKey NOTE submenu /PARMS/ /HSP/) 22-22
8) NOTE VERTICAL LINE TO LINE SPACING WITH RATIO OPTION, (FKey NOTE submenu /PARMS/ /VSP/) 22-23
9) NOTE CHARACTER WIDTH, AND CHARACTER HEIGHT SPECIAL OPTIONS (FKey NOTE submenu /PARMS/ (/CWID/ /CHT/)) 22-24
10) NOTE HORIZONTAL SPACING SPECIAL OPTIONS (FKey NOTE submenu /PARMS/ (/HSP/) 22-25
11) NOTE VERTICAL SPACING SPECIAL OPTIONS (FKey NOTE submenu /PARMS/ (/VSP/) 22-26
12) NOTE SLANT (FKey NOTE submenu /PARMS/ /SLNT/) 22-27
13) NOTE SPAN (FKey NOTE submenu /PARMS/ /SPN/) 22-28

SUBMENU /GEN NOTE/ 22-29

14) GENERAL NOTE OPTION (FKey NOTE submenu /GEN NOTE/ 22-30

SUBMENU /CHG/ 22-31

15) EDIT AN EXISTING NOTE 22-32
16) MOVE AN EXISTING NOTE 22-33
17) RESIZE AN EXISTING NOTE 22-33
18) CHANGE THE ANGLE OF AN EXISTING NOTE 22-34
19) CHANGE THE SIZE OF AN EXISTING NOTE TO CADAM STANDARD SMALL SIZE 22-34
20) CHANGE THE SIZE OF AN EXISTING NOTE TO CADAM STANDARD LARGE SIZE 22-34
21) TO REJUSTIFY AN EXISTING NOTE 22-34
22) TO ADJUST AN EXISTING NOTE TO FIT TO A LENGTH 22-35

CHAPTER 23 FKey DIM

FKey DIMENSION 23-1
DIMENSIONS -- TO SCALE OR NOT TO SCALE 23-5

FUNCTION KEY DIMENSION SUBMENU OPTIONS FOR STANDARD DIMENSIONS 23-7
FUNCTION KEY DIMENSION SUBMENU OPTIONS FOR ISO DIMENSIONS 23-9

SUBMENU /HZ/ AND SUBMENU /HORZ/ 23-15

FKEY DIM SUBMENU /HZ/ (STANDARD DIM) AND /HORZ/ (ISO DIM) 23-16
1) HORIZONTAL DIMENSION BETWEEN TWO POINTS 23-17
2) HORIZONTAL DIMENSION ALONG A LINE 23-18
3) HORIZONTAL DIMENSION BETWEEN TWO VERTICAL LINES 23-19

FKEY DIM SUBMENU /VT/ (STANDARD DIM) AND /VERT/ (ISO DIM) 23-22
4) VERTICAL DIMENSION BETWEEN TWO POINTS 23-23
5) VERTICAL DIMENSION ALONG A LINE 23-24
6) VERTICAL DIMENSION BETWEEN TWO VERTICAL LINES 23-25

SUBMENU /PR/ AND SUBMENU /PARAL/ 23-27

FKEY DIM SUBMENU /PR/ (STANDARD DIM) AND /PARAL/ (ISO DIM) 23-28
7) PARALLEL DIMENSION BETWEEN TWO POINTS 23-29
8) PARALLEL DIMENSION ALONG A LINE (i.e. the actual length of the line) 23-30
9) PARALLEL DIMENSION BETWEEN TWO POINTS MEASURED PARALLEL TO A SELECTED LINE 23-31

SUBMENU /NM/ AND SUBMENU /NORM/ 23-33
FKEY DIM SUBMENU /NM/ (STANDARD DIM) AND /NORM/ (ISO DIM) 23-34
10) NORMAL DIMENSION BETWEEN TWO ELEMENTS 23-35

SUBMENU /RD/ AND SUBMENU /RAD/ 23-37
FKEY DIM SUBMENU /RD/ (STANDARD DIM) AND /RAD/ (ISO DIM) 23-38
11) RADIUS DIMENSION OF AN ARC OR CIRCLE 23-39

SUBMENU /DM/ AND SUBMENU /DIA/ 23-41
FKEY DIM SUBMENU /DM/ (STANDARD DIM) AND /DIA/ (ISO DIM) 23-42
12) DIAMETER DIMENSION OF A CIRCLE 23-43

SUBMENU /AN/ AND SUBMENU /ANG/ 23-45
FKEY DIM SUBMENU /AN/ (STANDARD DIM) AND /ANG/ (ISO DIM) 23-46
13) ANGLE DIMENSION BETWEEN TWO INTERSECTING LINES 23-47

SUBMENU /CV/ AND SUBMENU /CRV/ 23-51
FKEY DIM SUBMENU /CV/ (STANDARD DIM) AND /CRV/ (ISO DIM) 23-52
14) CURVE DIMENSION OF AN ARC OR SPLINE 23-53

SUBMENU /CHAM/ 23-55
FKEY DIM /CRV/ (ISO DIM) 23-56
15) CHAMFER DIMENSION OF AN ARC OR SPLINE 23-57

A SUMMARY OF DIFFERENT DIMENSIONINGOPTIONS 23-59
DIMENSIONING OPTIONS PAGE 1 23-61
DIMENSIONING OPTIONS PAGE 2 23-62
EXAMPLES OF DIFFERENT DECIMAL PLACES AND ANGLE TYPE SETTINGS 23-63

THE FOUR DIMENSIONING CLASSES PRIMARY DIMENSIONS (/PRIM/)BASE DIMENSIONS (/BASE/)
CHAIN DIMENSIONS (/CHAIN/) DATUM DIMENSIONS (/DATUM/) 23-65

PRIMARY DIMENSIONING CLASS 23-66
BASE DIMENSIONING CLASS 23-67
CHAIN DIMENSIONING CLASS 23-68
DATUM DIMENSIONING CLASS 23-69

CHAPTER 24 FKey SYMBOL

FKey SYMBOL 24-1
MENU ITEM TREE DESCRIPTION 24-3

BEGINNER SECTION STANDARD SYMBOLS 24-7
SUBMENU / ARW / 24-9
SUBMENU / TRI / 24-11
SUBMENU / RECT / 24-13
SUBMENU / RIVET / 24-15
SUBMENU / DOT / 24-17
SUBMENU / BLN / 24-19
SUBMENU / DELTA / 24-21
SUBMENU / SECT / 24-23
SUBMENU / TXT-LN / 24-25

ADVANCED SECTION SPECIAL SYMBOLS 24-27
SUBMENU / SPECIAL / 24-29
INTRODUCTION 24-30
ACCESSING THE SYMBOL TABLE DISPLAY PAGE AND MAKING A SYMBOL TABLE ACTIVE 24-30
ACCESSING THE SYMBOL DISPLAY PAGE FOR THE ACTIVE SYMBOL TABLE 24-31
PLACING A SYMBOL ON YOUR DRAWING 24-32
HOW SYMBOLS FIT INSIDE A MICRO CADAM DRAWING 24-33
SYMBOLS IN MAINFRAME CADAM 24-34
SHOWING SYMBOLS AND REDISPLAYING A DRAWING 24-35
EDITING AN EXISTING SYMBOL ON A DRAWING 24-35
REPLACING AN EXISTING SYMBOL ON A DRAWING WITH ANOTHER SYMBOL 24-36
USING FKEY RELIMIT /BREAK/ /BREAK AROUND/ WITH SYMBOLS 24-36
USING FKEY GROUP /TRAP/ STRETCH/ WITH SYMBOLS AND DIAGRAMS 24-36

USING MULTILINES WITH SYMBOLS IN DIAGRAMS 24-36
MAKING YOUR OWN SYMBOL TABLES AND SYMBOLS 24-37
CREATING A NEW SYMBOL TABLE 24-38

CHAPTER 25 FKey AUXVIEW

FKey AUXVIEW 25-1
ORTHOGRAPHIC VIEWS 25-2
AXONOMETRIC VIEWS 25-3
ISOMETRIC VIEWS 25-3
TRUE VIEWS 25-4

OTHER USES FOR AUXILIARY VIEWS 25-5
ENLARGED DETAIL VIEWS 25-5
STARTER FORMATS 25-6
AUXILIARY VIEWS USED AS LAYERS 25-6
FUNCTION KEY AUXVIEW SUBMENU OPTIONS 25-7

SUBMENU /START/ AND SUBMENU /START/ /ORTHO/ 25-9
FKEY AUXVIEW /START/ CONCEPTS 25-10
ORTHOGRAPHIC VIEW CONCEPTS (FKEY AUXVIEW /START/ /ORTHO/) 25-10
CREATING ORTHOGRAPHIC VIEWS USING LINE OF SIGHT 25-13
A) CALL A STARTER FORMAT AND FILE IT WITH A DIFFERENT NAME 25-13
B) PREPARE TO CONSTRUCT THE FIRST ORTHOGRAPHIC VIEW (PLAN VIEW) 25-13
C) CONSTRUCT GEOMETRY IN THE FIRST ORTHOGRAPHIC VIEW (VIEW PV) 25-14
D) START A RELATED AUXILIARY VIEW (ORTHOGRAPHIC VIEW FV (FRONT VIEW)) . 25-19
E) CONSTRUCT GEOMETRY IN THE SECOND ORTHOGRAPHIC VIEW (VIEW FV) 25-20
F) START ANOTHER RELATED AUXILIARY VIEW (ORTHOGRAPHIC VIEW SV (SIDE VIEW)) 25-27
G) CONSTRUCT GEOMETRY IN THE THIRD ORTHOGRAPHIC VIEW (VIEW SV) 25-29

SUBMENU /START/ /TRUE/ 25-35
TRUE VIEW CONCEPTS (FKEY AUXVIEW /START/ /TRUE/) 25-36
CREATING A TRUE VIEW FROM 3 POINTS IN 3D SPACE 25-36
A) PREPARE TO CONSTRUCT THE TRUE VIEW 25-36
B) START THE TRUE VIEW 25-37
C) CONSTRUCT THE TRUE VIEW 25-40
CREATING A TRUE VIEW FROM 2 TRUE LENGTH LINES 25-45
A) PREPARE TO CONSTRUCT THE TRUE VIEW 25-45
B) START THE TRUE VIEW 25-45
C) CONSTRUCT THE TRUE VIEW 25-47

SUBMENU /START/ /ISO/ 25-49
ISOMETRIC VIEW CONCEPTS (FKEY AUXVIEW /START/ /ISO/) 25-50
CREATING AN AXONOMETRIC VIEW 25-53
CREATING AN ISOMETRIC VIEW 25-54

SUBMENU /CHOOSE/ SUBMENU /NO SHO/ and /SHO/ SUBMENU /2-VU/ and /3-VU/ SUBMENU /MOV/ SUBMENU /SCL/ SUBMENU /ERS/ SUBMENU /CHGPV/ 25-55

FKEY AUXVIEW /CHOOSE/ 25-56
FKEY AUXVIEW /NO SHO/ and /SHO/ 25-58
FKEY AUXVIEW /2-VU/ 25-59
FKEY AUXVIEW /3-VU/ 25-60
FKEY AUXVIEW /MOV/ 25-62
FKEY AUXVIEW /SCL/ 25-64
FKEY AUXVIEW /ERS/ 25-65
FKEY AUXVIEW /CHGPV/ 25-66

CHAPTER 26 FKey DETAIL

FKey DETAIL 26-1

REASONS FOR USING DETAIL PAGES 26-3
FUNCTION KEY DETAIL SUBMENU OPTIONS 26-4

BEGINNER SECTION 26-11

SUBMENU / START / 26-13
1) FKEY DETAIL /START/ CONCEPTS 26-14
2) DETAIL PAGE QUESTIONS 26-15
3) DETAIL PAGE CONCEPTS 26-16
4) MESSAGES 26-19
SUBMENU / COPY / 26-21
5) FKEY DETAIL /COPY/ CONCEPTS 26-22
6) REASONS FOR USING FKEY DETAIL /COPY/ 26-22
7) COPY GEOMETRY FROM THE FRONT PAGE TO A DETAIL PAGE 26-25
8) COPY GEOMETRY FROM ONE DETAIL PAGE TO ANOTHER DETAIL PAGE 26-25
SUBMENU / USE / SUBMENU / DITTO / 26-27
9) FKEY DETAIL /USE/ AND /DITTO/ CONCEPTS 26-28
10) MANIPULATING A DITTO 26-30
11) THE PIVOT POINT 26-31
12) THE LEVER POINT 26-32
13) PLACING A USE OR DITTO IN YOUR DRAWING 26-33
14) EXAMPLE - PLACING A USE IN YOUR DRAWING 26-34
15) EXAMPLE - PLACING A DITTO IN YOUR DRAWING 26-35
16) NORMAL, FILLED AND CROSS HATCHED DITTOS 26-37
17) USING A CROSS HATCHED DITTO TO PLACE AN AREAFILL ONTO A DRAWING . . 26-38

ADVANCED SECTION 26-41

SUBMENU / TRANSFER / 26-43
18) FKEY DETAIL /TRANSFER/ CONCEPTS 26-44
FROM A VIEW TO A DETAIL PAGE 26-44
FROM A DETAIL PAGE TO A DETAIL PAGE 26-44
19) TO TRANSFER AN ENTIRE VIEW FROM DRAWING NO. 1 TO A DETAIL PAGE ON DRAWING NO. 2 26-44
20) TO TRANSFER A DETAIL PAGE FROM DRAWING NO. 1 TO A DETAIL PAGE ON DRAWING NO. 2 26-46
21) TO TRANSFER PART OF A VIEW (I.E. SELECTED GEOMETRY) FROM DRAWING NO.

1 TO A DETAIL PAGE ON DRAWING NO. 2 26-47
SUBMENU / STDLIB / 26-49
22) FKEY DETAIL /STDLIB/ CONCEPTS 26-50
23) CREATING YOUR OWN STANDARD LIBRARY 26-52
24) ACQUIRING STANDARD LIBRARIES 26-53
25) USING THE STANDARD LIBRARY TO FACILITATE THE TRANSFER OF MULTIPLE DETAIL PAGES FROM ONE DRAWING TO ANOTHER 26-54

PRACTICE EXERCISE 26-57
A) LOGON TO MICRO CADAM AND START A NEW DRAWING 26-58
B) CHANGE THE WINDOW SIZE AND ADD DESCRIPTIVE TEXT TO THE DRAWING . . . 26-60
C) START A NEW, BLANK DETAIL PAGE, AND DRAW GEOMETRY ON IT 26-61
D) RETURN TO THE FRONT PAGE AND PLACE A DITTO AND A USE THERE 26-61
E) START TWO MORE DETAIL PAGES, DRAW GEOMETRY ON THE DETAIL PAGES, AND THEN PLACE THEM AS A DITTO AND A USE ON THE FRONT PAGE 26-63
F) PLACE MULTIPLE COPIES OF A DITTO ON THE FRONT PAGE AND VERIFY THAT EACH DITTO UPDATES WHEN THE GEOMETRY ON THE DETAIL PAGE IS CHANGED 26-64

CHAPTER 27 FKey ORIGIN

FKey ORIGIN 27-1
FUNCTION KEY ORIGIN SUBMENU OPTIONS 27-3
SUBMENU / START / 27-4

CHAPTER 28 PLOTTING

PLOTTING 28-1
A) ADD PLOT DATA TO A DRAWING BY THE INDICATE METHOD 28-1
B) ADD PLOT DATA TO A DRAWING BY THE NC LINE METHOD 28-3
C) PLOTTING A MICRO CADAM DRAWING 28-5
TO PLOT A MICRO CADAM DRAWING, FOLLOW THESE STEPS 28-6
D) OVERPLOTTING MICRO CADAM MODELS ON TOP OF EACH OTHER 28-8
TO OVERPLOT A DRAWING, FOLLOW THESE STEPS 28-9
E) CREATING A ’D’ SIZE TO ’B’ SIZE PLOT CONVERSION DRAWING 28-12
TO CREATE A ’D’ SIZE TO ’B’ SIZE PLOT CONVERSION DRAWING, FOLLOW THESE STEPS 28-12
TO USE THE ’D’ SIZE TO ’B’ SIZE PLOT CONVERSION DRAWING, FOLLOW THESE STEPS 28-14
F) THE STARTER FORMAT 28-15
G) TO BEGIN A NEW DRAWING MICRO CADAM DRAWING BY USING A STARTER FORMAT . . 28-17
H) A LISTING OF THE DIFFERENT PROGRAMS AFFECTING PLOTTING 28-18
I) PLOTTING TO A PRINTER 28-18
J) PLOTTING TO A PLOTTER 28-19

CHAPTER 29 ELECTRONIC PUBLISHING

ELECTRONIC PUBLISHING 29-1
HPGL SETUP 29-1
CGM SETUP 29-2
DXF SETUP 29-2

CHAPTER 30 UTILITIES

MICRO CADAM UTILITIES 30-1

THE DATA MANAGER 30-2
STARTING THE DATA MANAGER 30-2
SORT DRAWING FILES 30-3
CHANGE DRAWING FILE ATTRIBUTES 30-4
COPY DRAWING FILES 30-4
DISPLAY DRAWING FILE NAMES 30-5

THE REBUILD UTILITY 30-6
REBUILDING THE MICRO CADAM DATA BASE 30-8

THE EXTRACT UTILITY 30-9
EXTRACTING INFORMATION FROM THE MICRO CADAM DATA BASE 30-9
USING THE EXTRACT AND REBUILD UTILITIES TO RECOVER FILES FROM BACKUP 30-10

THE DXF TRANSLATOR 30-11
STARTING THE DXF TRANSLATOR 30-11
DXF HINTS, TIPS, COMMENTS AND SUGGESTIONS 30-14

THE CGITEST UTILITY 30-15

DATA TRANSFER 30-15

CHAPTER 31 SHAREWARE BONUS UTILITIES

WHAT IS SHAREWARE? 31-1
PRINTCAD AND PRINTGL LICENSING: 31-1
Q387 MATH COPROCESSOR EMULATOR LICENSING: 31-3
WHAT IS PRINTCAD? 31-4
CONFIGURING YOUR SYSTEM FOR PRINTCAD: 31-4
WHAT IS PRINTGL? 31-7
CONFIGURING YOUR SYSTEM FOR PRINTGL: 31-8

WHAT IS Q387 ? 31-9
CONFIGURING YOUR SYSTEM FOR Q387: 31-10

CHAPTER 32 COMMERCIAL VERSIONS OF CADAM

COMMERCIAL VERSIONS OF MICRO CADAM 32-1
MICRO CADAM PLUS R14 32-1
MICRO CADAM DATA TRANSFER 32-5
MICRO CADAM LDX 32-5
MICRO CADAM IGES 32-6
MICRO CADAM ACCESS 32-6
MICRO CADAM ALTERNATE CHARACTER SETS 32-6
MICRO CADAM FUNCTION KEY BOX 32-6
MICRO CADAM VIEW 32-6
HARDWARE PLATFORMS 32-7
DOS PLATFORMS 32-7
UNIX PLATFORMS 32-7

CHAPTER 33 HINTS, TIPS AND SUGGESTIONS

GENERAL 33-1
FKEY GROUP 33-3
FKEY RELIMIT 33-3
FKEY WINDOW 33-4
FKEY SHOW 33-4
FKEY DETAIL 33-5
FKEY AUXVIEW 33-6
FKEY NOTE 33-7
FKEY ORIGIN 33-7
FKEY DIM 33-7

APPENDIX A

SAMPLE DRAWINGS

Figure 1 DRUM ASSEMBLY 75" X 60" SINGLE DRUM MINE HOIST A-2
Figure 2 RETURN SHEAVES ARRANGEMENT (MAIN HOIST) 85 TON CAPACITY B.O.P. TROLLEY A-3
Figure 3 OUTPUT SHAFT - 17 TEETH, 1.5 DP, 500H MAIN HOIST GEAR BOX A-4
Figure 4 MAIN HOIST GEARBOX ASSEMBLY (500H - DIRS) A-5
Figure 5 GENERAL ARRANGEMENT OF (2) 170/25 TON X 57'-0" SPAN CDB-T-EC CRANES A-6
Figure 6 BOX GIRDER FABRICATION 170/25 TON X 57'-0" SPAN CDB-T-EC CRANE A-7
Figure 7 GENERAL ASSEMBLY OF 75" X 60" SINGLE DRUM MINE HOIST (SHT 1 OF 2) A-8
Figure 8 BRIDGE TRAVEL LIMIT SWITCH ARRANGEMENT OF 170/25 TON X 57'-0" SPAN CDB-T-EC CRANE A-9
Figure 9 ISOMETRIC OF A BENCH GRINDER A-10
Figure 10 A 4 WHEEL DRIVE VEHICLE A-11
Figure 11 HOTROD A-12
Figure 12 POWERPLANT A-13
Figure 13 GARAGE ADDITION A-14
Figure 14 FRONT ELEVATION A-15
Figure 15 HOLLYHILL A-16

(NOTE: FIGURE 1 TO FIGURE 8 WERE PROVIDED COURTESY OF JOHN T. HEPBURN, LIMITED)

APPENDIX B

ABBREVIATIONS

APPENDIX C

GLOSSARY

INDEX

REORDER FORM

TABLE OF CONTENTS SUMMARY CHART

Chapter	Description	Chapter	Description	Chapter	Description
1	Installation & Setup	12	FKey Line	23	FKey Dim
2	How Do I Use This Book?	13	Fkey Circle	24	FKey Symbol
3	Introduction	14	FKey Spline	25	FKey Auxview
4	Overview	15	FKey Relimit	26	FKey Detail
5	CADAM Background	16	FKey Corner	27	FKey Origin
6	Concepts	17	FKey Offset	28	Plotting
7	Quickstart	18	FKey Group	29	Electronic Publishing
8	FKey File	19	FKey Type	30	Utilities
9	FKey Window	20	FKey Show	31	Shareware Bonus Utilities
10	FKey Analyze	21	FKey Elec	32	Commercial Versions of CADAM
11	FKey Point	22	FKey Note	33	Hints, Tips & Suggestions

CHAPTER 1 INSTALLATION AND SETUP

This chapter will walk you through the installation and setup of the MICRO CADAM FREE software.

The following are *minimum* system requirements to run MICRO CADAM:

AT class computer (i.e. 80286)
80287 math coprocessor (shareware coprocessor emulation s/w included for 386 & 486)
640K RAM Base memory (extended or expanded memory not required)
EGA monitor
mouse or digitizer
DOS 3.3 or higher
hard disk (approx 12 MB required for initial system installation)
A serial port for mouse or digitizer
A parallel port for a printer or plotter

The MICRO CADAM FREE software is provided on 4 high density 3½" diskettes (i.e. 1.44 Mb capacity). To enhance software compatibility between different formats each diskette contains a maximum of 1.2 Mb of information. Should you require the software on 5¼" diskettes (i.e. 1.2 Mb capacity) please do the following:

1. Go to a computer that has both types of diskette drives (i.e. both a 3½" (1.44 Mb) and a 5¼" (1.2 Mb)). Let's assume that drive A is the 3½" drive and drive B is the 5¼" drive (change these drive designations to match the computer).

2. Place the first 3½" diskette in drive A. Place a formatted 5¼" diskette in drive B. (NOTE: If the diskette is not formatted, you may format it with the following command: FORMAT B:)

3. Copy all information from the first 3½" diskette in drive A to the 5¼" diskette in drive B.

   Use the following command: COPY A:*.* B:\

4. Repeat these steps with the remaining diskettes. Label all 5¼" diskettes.

Should you not have access to a computer with both sizes of diskette drives, please contact SILVER PUBLISHING at the following address and supply us with details of your purchase. We will provide you with 5¼" diskettes for a nominal charge.

SILVER PUBLISHING
BOX 71566
AURORA, ONTARIO, CANADA
L4G 6S9

FAX: 1-905-841-0253

STEP 1: INSTALL THE SOFTWARE:

CAUTION!!!!! THIS INSTALLATION WILL PERFORM THE FOLLOWING STEP AUTOMATICALLY:

1.If an **\MCADAM** subdirectory does not exist on your installation drive, it will be automatically created.

If you already have an **\MCADAM** subdirectory on your installation drive, you have a commercial version of MICRO CADAM already loaded on that drive, or you have MICRO CADAM MODELS stored there. **INSTALL THE FREE SOFTWARE ON ANOTHER DRIVE, OR RENAME THE \MCADAM DIRECTORY TO ANOTHER NAME BEFORE INSTALLING THE SOFTWARE. THE FREE SOFTWARE AUTOMATICALLY INSTALLS INTO THE \MCADAM DIRECTORY AND WILL OVERWRITE AND/OR "MIX" WITH YOUR EXISTING FILES.**

We will assume that all installation is performed *from* drive A and *to* drive C. If you are using different drives, then please replace drives A and C with the drives you are using.

1. Place installation diskette #1 in drive A.

2. Change to drive A. (i.e. type **A:** and press the enter key). You should see a prompt like **A:>** when you are on drive A.

3. Type **INSTALL A: C:** (where **A:** is the drive where the software is installed *FROM*,

and **C:** is the drive where you are going to install the software *TO*...if you are installing on drive D then type **INSTALL A: D:** etc.) and press the enter key.

4. The MICRO CADAM FREE software will now begin installing.

5. Follow the screen prompts. You will be asked to insert the diskettes in various combinations. When the prompt *Insert the last disk of the backup set* appears, this means diskette #4. When the prompt *Insert diskette with batch file* appears, this means diskette #1.

6. The installation is now finished! Congratulations! You have now installed a free copy of one of the most powerful CAD programs available. Let's proceed to configure it to suit your system hardware.

STEP 2: QUICK CONFIGURE THE SOFTWARE:

NOTE: You may also configure your system by running the MCINSTAL program. See page 1-18 for more details.

CAUTION! SOME COMPUTERS USE DEVICE DRIVERS IN THEIR CONFIG.SYS TO ACCESS HARD DISKS OR COMPRESSED DISKS. SHOULD YOUR COMPUTER USE THEM, YOU MUST MANUALLY ADD THESE DEVICE DRIVERS TO THE CONFIG.CAD FILE BEFORE REBOOTING. FAILURE TO DO SO MAY RESULT EITHER IN YOUR SYSTEM FAILING TO BOOT, OR TEMPORARY LOSS OF ACCESS TO A HARD DISK OR A COMPRESSED DRIVE. IT IS WISE TO HAVE A PROPER BOOT DISK AVAILABLE AT ALL TIMES IN CASE OF PROBLEMS!

There are many different configurations included. The one you use depends on the hardware you have in your computer. These configurations encompass many of the more common hardware setups and should permit most users to get up and running quickly.

YOUR ORIGINAL AUTOEXEC.BAT AND CONFIG.SYS FILES ARE NOT CHANGED, HOWEVER IT IS GOOD PRACTICE TO BACK THEM UP BEFORE CONTINUING!

To quick configure your system follow these steps:

1. Change to the **\MCADAM\BATCH** subdirectory. For example type **CD \MCADAM\BATCH** and press the enter key. Your prompt should now look like this: **C:>\MCADAM\BATCH**.

2. Look in the following chart and find the computer configuration that most closely matches your system. Immediately to the right of the configuration line is the name of the batch file to run. The batch file **CONFIGnn.bat** will do the following:

   copy c:\mcadam\batch\autoexec.nn to c:\autoexec.cad
   copy c:\mcadam\batch\config.nn to c:\config.cad

   The **nn** is a number from 1 - 22 and is specific to the hardware configuration you select in the table.

The configuration table follows:

COMPUTER CONFIGURATION	BATCH FILE TO RUN
VGA, Logitech Mouse on Com1, S/W on drive C, Epson printer	CONFIG1.BAT
VGA, Logitech Mouse on Com2, S/W on drive C, Epson printer	CONFIG2.BAT
VGA, Logitech Mouse on Com1, S/W on drive D, Epson printer	CONFIG3.BAT
VGA, Logitech Mouse on Com2, S/W on drive D, Epson printer	CONFIG4.BAT
VGA, Logitech Mouse on Com1, S/W on Drive C, PRINTCAD Shareware HPGL program with Epson Printer	CONFIG5.BAT
VGA, Logitech Mouse on Com2, S/W on Drive C, PRINTCAD Shareware HPGL program with Epson Printer	CONFIG6.BAT
VGA, MSMOUSE on Com1, S/W on drive C, Epson printer	CONFIG7.BAT
VGA, MSMOUSE on Com2, S/W on drive C, Epson printer	CONFIG8.BAT
VGA, MSMOUSE on Com1, S/W on drive D, Epson printer	CONFIG9.BAT
VGA, MSMOUSE on Com2, S/W on drive D, Epson printer	CONFIG10.BAT
EGA, Logitech Mouse on Com1, S/W on drive C, Epson printer	CONFIG11.BAT
EGA, Logitech Mouse on Com2, S/W on drive C, Epson printer	CONFIG12.BAT

COMPUTER CONFIGURATION	BATCH FILE TO RUN
EGA, Logitech Mouse on Com1, S/W on drive D, Epson printer	CONFIG13.BAT
EGA, Logitech Mouse on Com2, S/W on drive D, Epson printer	CONFIG14.BAT
EGA, MSMOUSE on Com1, S/W on drive C, Epson printer	CONFIG15.BAT
EGA, MSMOUSE on Com2, S/W on drive C, Epson printer	CONFIG16.BAT
EGA, MSMOUSE on Com1, S/W on drive D, Epson printer	CONFIG17.BAT
EGA, MSMOUSE on Com2, S/W on drive D, Epson printer	CONFIG18.BAT
VGA, Summagraphics Tablet on Com1, S/W on Drive C, Calcomp plotter on Com2	CONFIG19.BAT
VGA, Summagraphics Tablet on Com2, S/W on Drive C, HPGL plot to a file	CONFIG20.BAT
VGA, Bus mouse, S/W on Drive C, HPGL plot to a file	CONFIG21.BAT
VGA, PS2 Bus mouse, S/W on Drive C, HPGL plot to a file	CONFIG22.BAT

If you have a computer configuration that is different than the choices shown in the table above, select the configuration closest to the one you have and modify the c:\autoexec.cad and c:\config.cad files manually as follows:

NOTE: **VGA** refers to a VGA monitor; **EGA** refers to an EGA monitor; **Com1** and **Com2** refer to serial ports 1 and 2; **S/W on drive C** refers to the MICRO CADAM FREE SOFTWARE installed on drive C; **PRINTCAD** refers to the Shareware program that allows a printer to output HPGL files (see Chapter 31 for more information on the installation, licensing and use of PRINTCAD. **To run a batch file, type in the name of the batch file and press the enter key (e.g. type CONFIG5 and press the enter key).**

STEP 3: MAKE MANUAL CHANGES TO THE C:\AUTOEXEC.CAD IF NECESSARY:

A typical autoexec.cad file is shown below: (Note: this autoexec.cad file will be found in the root directory on drive C (i.e. C:\autoexec.cad).

```
@ECHO OFF
PROMPT=$p$g
PATH=C:\;C:\DOS;C:\MCADAM;C:\MCADAM\BIN;C:\MCADAM\GIMSAMPL;
SET MCADAM= /dMOUSE /c03F8 /s050
SET JOURNAL=C:\MCADAM\
SET EPSON100=LPT1
C:\MOUSE
C:
CD \MCADAM
MENU
```

Customize this autoexec.cad file as follows: (use a text editor such as edlin, edit or a third party utility)

1. **@ECHO OFF** No changes necessary

2. **PROMPT=pg** No changes necessary

3. **PATH=C:\;C:\DOS;C:\MCADAM;C:\MCADAM\BIN;C:\MCADAM\GIMSAMPL;** Change the letter **C** in front of \MCADAM to the drive where it is loaded. For example, if the MICRO CADAM FREE SOFTWARE is loaded on drive D, this line would read as follows:

   PATH=C:\;C:\DOS;D:\MCADAM;D:\MCADAM\BIN;D:\MCADAM\GIMSAMPL;

4. **SET MCADAM= /dMOUSE /c03F8 /s050** Make the following changes:

   a. **/dMOUSE** This is the CGI device type which may be either MOUSE or TABLET. If you are using a mouse this option is ok as is. If you are using a tablet, then change it to read **/dTABLET**.

   b. **/c03F8** This is the hexadecimal address of the serial port where the security devices were connected in the commercial version. The security verification code has been disabled in this FREE SOFTWARE. Leave this setting as it is.

c. **/s050** This is a mouse/tablet sensitivity parameter. /s050 is the normal setting. Lower numbers are more sensitive; higher numbers are less sensitive. Try to stay in the range of 035 to 065.

5. **SET JOURNAL=C:\MCADAM** This is an environment setting that determines where the MICRO CADAM Journal files are kept. Change the **C:** to the drive where MICRO CADAM is loaded. For example, if MICRO CADAM is loaded in drive D, then the line should read

SET JOURNAL=D:\MCADAM

The journal file keeps a temporary record of each action (i.e. keystroke, SELECT, INDICATE, Y/N, etc.). When you file a drawing and exit normally, then this journal file is erased. If your computer locks up (or the power goes off) then you have not exited the program properly and the journal file is not erased. When you next start the program, you have one extra option (RECOVER) on the submenu line at the bottom of the screen. Select the /RECOVER/ option and your drawing will be reconstructed from the journal file.

6. **SET EPSON100=LPT1** This is an environment setting that determines which parallel port the epson printer is connected to. This environment setting is matched with the printer/plotter device driver in the config.sys file. Other environment settings are located in the section on output devices. Do not change this line for now.

7. **C:\MOUSE** This is the program that drives your mouse. It is normally called mouse.com and is located in the root directory in this example. Note that MICRO CADAM requires **TWO** mouse drivers in order for the mouse to work. The first driver is a MICRO CADAM device driver placed in the config.sys (e.g. DEVICE=C:\MCADAM\DRIVERS\MSMOUSE.SYS /G:MOUSE). The second driver is the TSR (i.e. terminate and stay resident) driver that was included with your mouse software (normally called something like MOUSE.COM). Modify the drive, the path and the program name to suit your system (for example, if your mouse driver was located in the LOGITECH directory on drive D and was called MOUSE.COM, you should change the line to read **D:\LOGITECH\MOUSE**).

Should you have a generic mouse, please check the manual that came with your mouse. You will have to configure your mouse to run so that it emulates a Mouse Systems mouse, or a MicroSoft Mouse.

NOTE1: While configuring a mouse to run with MICRO CADAM (and trying different device drivers), it is sometimes necessary to turn the computer power off, and then on

again to allow the serial ports to reset.

NOTE2: Should you experience problems with the performance of your mouse, please obtain the latest mouse drivers available and try again!

8. **C:** Change this is the drive where MICRO CADAM is located.

9. **CD \MCADAM** This line changes to the MCADAM subdirectory (i.e. where the MICRO CADAM software is located). Do not change this line.

10. **MENU** This line runs the MICRO CADAM menu. Do not change this line.

NOTE: There may be a line that says **RESET** just before the "MENU" line. This line clears out buffers and pointers in the memory of EGA graphics cards. If you have an EGA card, leave this line in (or add it if it is not there). If you have a VGA or higher resolution card, then delete the line.

STEP 4: MAKE MANUAL CHANGES TO THE C:\CONFIG.CAD FILE IF NECESSARY:

A typical config.cad file is shown below: (Note: this config.cad file will later be copied to c:\config.sys)

```
FILES=20
BUFFERS=20
SHELL=C:\COMMAND.COM /E:384 /P
DEVICE=C:\DOS\SMARTDRV.EXE 1024
DEVICE=C:\MCADAM\DRIVERS\MSMOUSE.SYS /G:MOUSE
DEVICE=C:\MCADAM\DRIVERS\IBMVGA12.SYS
DEVICE=C:\MCADAM\DRIVERS\EPSON100.SYS
DEVICE=C:\MCADAM\DRIVERS\GSSCGI.SYS
BREAK=ON
```

Customize this config.cad file as follows: (use a text editor such as edlin, edit or a third party utility)

1. **FILES=20** No changes necessary

2. **BUFFERS=20** No changes necessary

3. **SHELL=C:\COMMAND.COM /E:384 /P** No changes necessary unless you run out of environment memory. If this happens then change the **384** to **512** and try again.

4. **DEVICE=C:\DOS\SMARTDRV.EXE 1024** This line is optional, but highly recommended. Smartdrive is a disk cache and can make MICRO CADAM run even faster. This line implements a 1 MB disk cache in extended memory. NOTE: Your disk cache may have a different name and different parameters...see your DOS manual. You need extended memory for this disk cache configuration.

5. **DEVICE=C:\MCADAM\DRIVERS\MSMOUSE.SYS /G:MOUSE** This is the input device driver. Make changes as follows:

   a. If necessary change the drive **C:** to the drive where the MICRO CADAM software is loaded.

   b. If the input device driver MSMOUSE.SYS does not appear to work correctly, try the other driver MOUSESYS.SYS and see if that works ok. (REMINDER: Make sure the mouse driver that came with your mouse is loaded in the autoexec.bat file.)

   c. If you are using a tablet, change **/G:MOUSE** to **/G:TABLET** and replace the mouse driver MSMOUSE.SYS with a suitable tablet driver (e.g. SUMMATB.SYS or CALCOMPB.SYS). You will also have to insert the environment settings **SET TABLET=SUMMATB** and **SET SUMMATB=COM2** (or whatever serial port the tablet is connected to) into the autoexec.cad file. (NOTE: If you are using a digitizer, remove the mouse driver from the autoexec.bat file.)

6. **DEVICE=C:\MCADAM\DRIVERS\IBMVGA12.SYS** This is the video display driver. Make changes as follows:

   a. If necessary change the drive **C:** to the drive where the MICRO CADAM software is loaded.

   b. If the video display device driver IBMVGA12.SYS does not appear to work correctly, try the other driver IBMEGA.SYS and see if that works ok (you may have an ega screen).

   c. See the section on display drivers for other options.

7. **DEVICE=C:\MCADAM\DRIVERS\EPSON100.SYS** This is the output device driver.

Make changes as follows:

a. If necessary change the drive **C:** to the drive where the MICRO CADAM software is loaded.

b. If the output device driver EPSON.SYS does not appear to work correctly, look in the section on output device drivers and try any other driver that is suitable for your printer/plotter.

c. See the section on display drivers for other options.

8. **DEVICE=C:\MCADAM\DRIVERS\GSSCGI.SYS** This is the device driver that MICRO CADAM uses to interface with the input, output and video device drivers.

a. If necessary change the drive **C:** to the drive where the MICRO CADAM software is loaded. No other changes are necessary.

STEP 5: COPY THE STARTUP FILES AND REBOOT THE SYSTEM:

The batch files 2CAD.BAT and 2OLD.BAT are provided in your \MCADAM directory and are copied to the root directory on drive C (i.e. C:\) on installation. They are used to easily switch back and forth between MICRO CADAM and other products that might require a different CONFIG.SYS and/or AUTOEXEC.BAT.

NOTE: Before using either **2CAD.BAT** OR **2OLD.BAT** the files **autoexec.cad** and **config.cad** should already exist in the root directory. They are placed there by one of the two following procedures:

1) The autoexec.cad and config.cad files are copied into the root directory using installation **STEP 1** (on page 1-2) to **STEP 5** (on page 1-10). These files are manually edited if necessary.

2) Use the MCINSTAL command to automatically create the config.cad and autoexec.cad files, and **DO NOT** replace your old config.sys and autoexec.bat files. This option is covered in more detail on page 1-18.

Now, use the command **2CAD** to automatically switch over to the MICRO CADAM

configuration. Type **2CAD** and press the enter key. The following happens:

c:\autoexec.bat is copied to c:\autoexec.old
c:\config.sys is copied to c:\config.old

c:\autoexec.cad is copied to c:\autoexec.bat
c:\config.cad is copied to c:\config.sys

The computer is rebooted and MICRO CADAM is then ready to run.

(Later, you can switch back to your old configuration by using the command **2OLD**. Type **2OLD** and press the enter key. **(NOTE: You may have to change to the \MCADAM directory to run the 2OLD file if \MCADAM or C:\ are not in your path).** The following happens:

c:\autoexec.old is copied to c:\autoexec.bat
c:\config.old is copied to c:\config.sys

c:\autoexec.old is then erased
c:\config.old is then erased

The computer is rebooted and your old (i.e. original) configuration is ready to run.
Using these commands makes switching back and forth a painless process. (NOTE: Should your computer not reboot after typing 2CAD or 2OLD, manually copy the files as shown above, then press the CTRL-ALT-DELETE buttons on your keyboard to reboot your computer.)

NOTE: Should you type 2CAD and receive the following message:

```
-----------------------------------------------------------
Your system has already been configured
to run MICRO CADAM.  To restore your
original AUTOEXEC.BAT and CONFIG.SYS,
type 2OLD
-----------------------------------------------------------
```

This means that your system is already configured and ready to run MICRO CADAM (or the files *autoexec.old* and *config.old* exist in the root directory). Change to the \MCADAM directory and either type **MCADAM** to start the MICRO CADAM program, or type **MENU** to bring up the MICRO CADAM menu, and select **MICRO CADAM CORNERSTONE** from this menu. You may also type 2OLD and restore your original configuration.

STEP 6: TEST THE CONFIGURATION:

Use the MCTEST.EXE program to test the software configuration before actually running the MICRO CADAM program. To test the program, follow these steps:

1. Change to the \MCADAM directory. Exit to your DOS prompt and type **CD \MCADAM**. Press the enter key. Your menu prompt should now read **C:\MCADAM**>.

2. Type MCTEST and press the enter key. The display screen shown at the right appears. The prompt ***Press any key to continue or [ESC] to abort*** appears near the top of the screen. Press any key to continue.

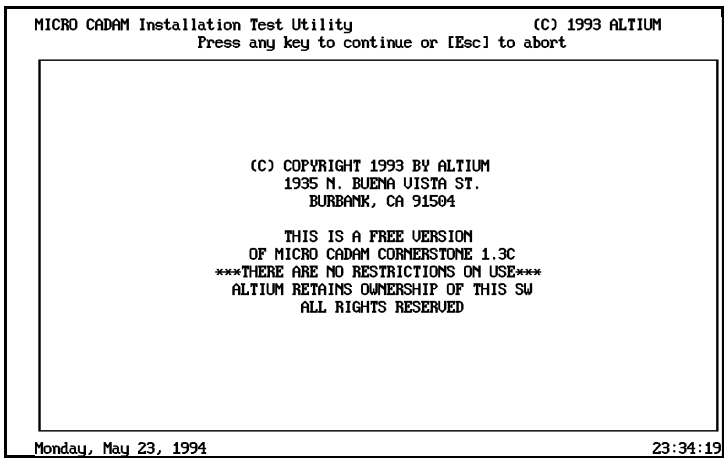

3. The screen at the right now appears. The commercial versions of MICRO CADAM are protected with a security lock that fits on the serial port. The MCTEST program still looks for the security lock. It doesn't find it here, but it doesn't matter because this FREE VERSION has been unprotected.

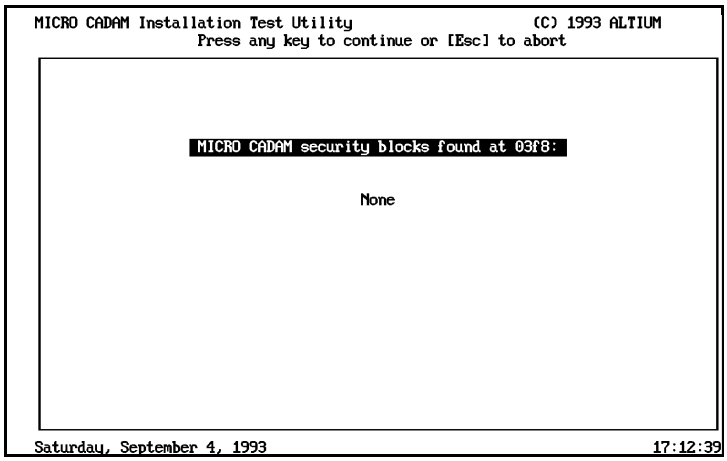

The prompt ***Press any key to continue or [ESC] to abort*** appears near the top of the screen. Press any key to continue.

4. The screen at the right now appears. Move your mouse and verify that the white rectangle moves as well. If it does, your mouse is ok. If it doesn't press the ESC key

and recheck your configuration.

Press the SELECT, INDICATE and Y/N buttons on the mouse (for a 3 button mouse). As you press them, the rectangle will highlight. The screen at the right is shown with the SELECT mouse button pushed. The prompt ***Press any key to continue or [ESC] to abort*** appears near the top of the screen. Press any key to continue.

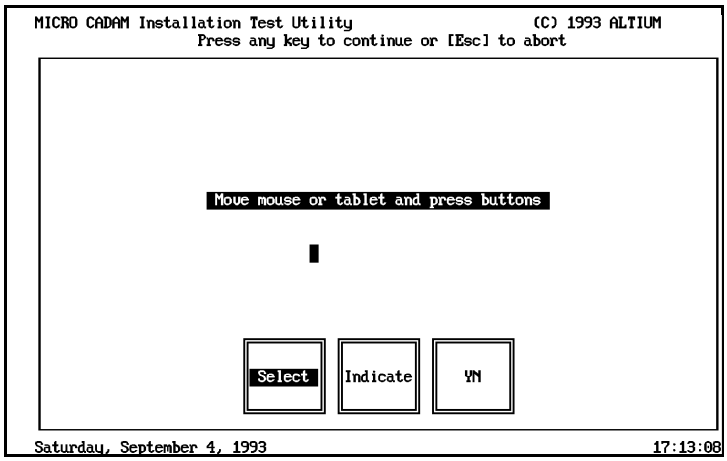

5. The screen at the right now appears. MICRO CADAM can be used with a Function Key Box. This box can be purchased as an option from an ALTIUM VAR (i.e. Value Added Remarketer). This screen recognizes that the Function Key Box is not present.

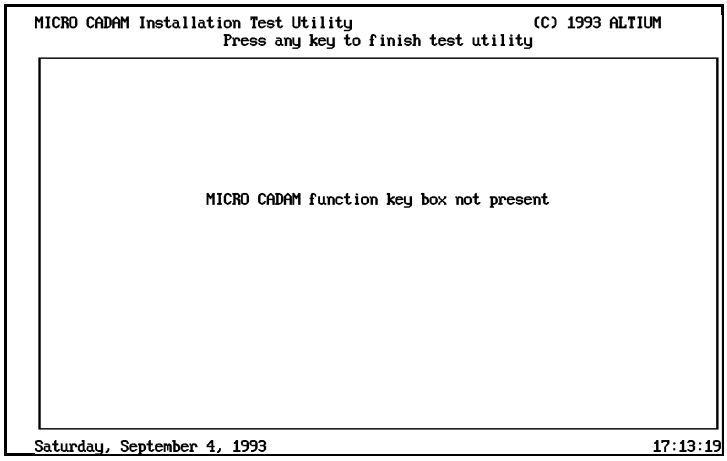

The prompt ***Press any key to finish test utility*** appears near the top of the screen. Press any key and the test program will finish.

STEP 7: RUN MICRO CADAM:

To run MICRO CADAM see the chapters on FKey FILE, or QUICKSTART. The steps are also summarized here:

1. Change to the \MCADAM directory. Exit to your DOS prompt and type **CD \MCADAM**. Press the enter key. Your DOS prompt should read **C:\MCADAM**>.

2. Start MICRO CADAM in one of the following 2 ways:

   1) Type **MCADAM** and press the enter key.

   2) Type **MENU** and press the enter key. A menu will appear. Using the arrow keys, highlight the word MICRO CADAM CORNERSTONE and press the enter key.

   The MICRO CADAM program loads and the screen shown at the right appears.

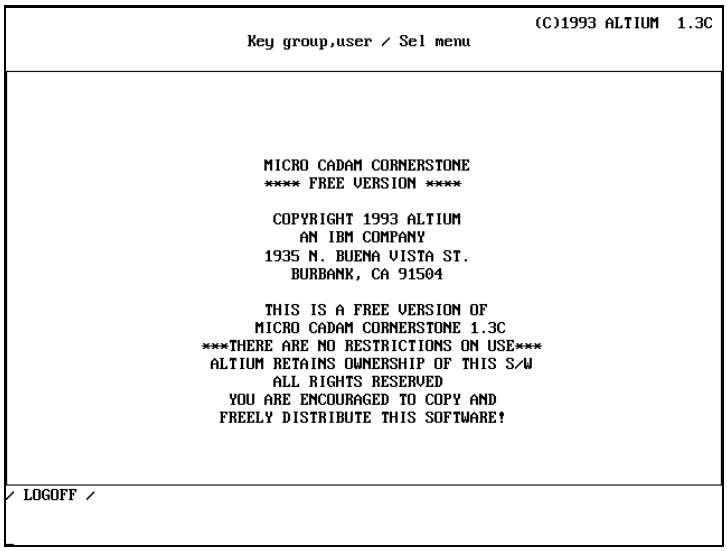

   Enter **CAD,DEMO** (i.e. type CAD,DEMO and then press the enter key) for the GROUP,USER (Note...the comma is important). Press the Y/N button on the mouse (or the F2 Function key button at the top or side of your keyboard) to display a list of drawings. Select one of the drawings from the screen (i.e. place the cursor on the drawing and press the select button on the mouse or digitizer). The drawing will now appear on your screen. Press the F1 function key on your keyboard to bring up the popup menu (or press CTRL-F1 and then F1 to display the sidebar menu). Select FKey WINDOW from the popup or sidebar menu and then select the /1/ on the submenu at the bottom of the screen. You should now see the entire drawing. See the chapters on FKey FILE and Quickstart for more information on logging on and running the program.

ERROR CONDITIONS AND MESSAGES:

AND WHAT TO DO IF MICRO CADAM WON'T START:

If your installation of MICRO CADAM is unsuccessful, you may encounter one of the following error conditions or messages.

function key box does not respond
This usually happens if the autoexec.bat file configures MICRO CADAM for a function key box, and then does not find a function key box upon startup or test. It is safe to ignore this message. The message can be removed by editing the autoexec.bat file...remove the **/a03e8 /i4** (or similar parameters) from the line **set mcadam=/a03e8 /i4 /dmouse /c02f8 /s050**

mouse seems to have no effect on the cursor
Check connections to the mouse and be sure it is properly connected to your computer. Make sure that the proper MICRO CADAM mouse driver is installed in the config.sys file. (Try both MOUSESYS.SYS and MSMOUSE.SYS). Make sure you have loaded your own mouse driver in the autoexec.bat (remember MICRO CADAM needs **TWO** mouse drivers loaded to run...the MICRO CADAM mouse driver in the config.sys and the mouse driver that came with your mouse). Make sure that your mouse driver is configured for the proper serial port (some mouse drivers need to configured for serial ports other than com1...see the documentation that came with your mouse for the required parameters).

While configuring a mouse to run with MICRO CADAM (and trying different device drivers), it is sometimes necessary to turn the computer power off, and then on again to allow the serial ports to reset.

Should you experience problems with the performance of your mouse, please obtain the latest mouse drivers available and try again!

If you have MS DOS 6.0 or MS WINDOWS 3.1 then you have a utility called MSD (for Micro Soft Diagnostics) on your disk. Check your \DOS or \WINDOWS directory for this file and type **MSD** to run it. MSD tells you a lot about your system. One of the things it will tell you is how many serial ports your computer "thinks" it has. Use this utility to verify that your serial ports are "live".

Summagraphics digitizer seems to have no effect on the cursor
Check all the same items as for the mouse problem in the paragraphs above. In addition, the earlier commercial versions of MICRO CADAM required that the AC jumper inside the summagraphics tablet be disabled (the AA and AB jumpers were left enabled). If all else fails, check and make sure that the AC jumper inside your summagraphics tablet is enabled (i.e. connected across both pins).

floating point not loaded
MICRO CADAM requires a math coprocessor to run. If your computer does not have a math coprocessor you will receive this message when you try to run MICRO CADAM.

You have two options: You can purchase a math coprocessor, install it and then run MICRO CADAM, or you can use the shareware math coprocessor software emulation that is provided with the software in this book. (Works with 386 and 486 systems and requires 340K bytes of extended memory). This math coprocessor emulator loads as a TSR in the autoexec.bat file. It will run for approximately 20 minutes at a time in its unregistered state. After you register, it will run permanently. The math coprocessor software is described in more detail in Chapter 31 (SHAREWARE BONUS UTILITIES). If you have an AT class computer (i.e. an 80286) then you must purchase and install an 80287 math coprocessor to run MICRO CADAM.

program too big to fit in memory
MICRO CADAM requires approximately 483,000 bytes of RAM (i.e. memory) to load and run. A computer has 655,360 bytes of RAM available. This leaves 172,360 bytes for all other device drivers, TSR's, network drivers and DOS to fit into. If the amount of available memory becomes less than 483,000 bytes you will receive this message.

To resolve this problem you must make available 483,000 bytes of RAM for MICRO CADAM to use. You can do this as follows:

- Erase all unnecessary device drivers
- Erase all unnecessary TSR's (i.e. terminate and stay resident) programs.

- Load DOS high (i.e. use DEVICE=HIMEM.SYS and DOS=HIGH commands in your config.sys file...assuming your version of DOS allows this).

- Load device drivers and TSR's high (use the DEVICE=EMM386.EXE NORAM and DEVICEHIGH=???????.SYS in the config.sys file, and LOADHIGH C:\????.COM in the autoexec.bat file). (NOTE: DO NOT LOAD THE MICRO CADAM GSSCGI.SYS DRIVER HIGH!)

- If your version of DOS does not allow you to load programs high, then use a third party utility to do so.

- Reboot your computer to free available memory (i.e. to erase existing TSR's from memory).

group locked

MICRO CADAM creates a file called LOCK.XXX in the group currently being accessed. If you are on a network, and you attempt to access a group that someone else is using, you will get the message **GROUP LOCKED**. You must wait for the other user to finish their filing activities (i.e. finish a file or a call) before you may access it. Note that this LOCK.XXX file is only present while a user is actually accessing (i.e. filing or calling) a MICRO CADAM drawing. It is designed to prevent **simultaneous** access of the same file by two users, thereby possibly corrupting the file.

If your system crashes while you are using MICRO CADAM, **whether or not you are in a network**, the LOCK.XXX file may prevent you from accessing a group, although no one else is accessing it. You must delete the LOCK.XXX file from the appropriate DOS subdirectory to gain access to your group again. Type the following at the DOS prompt, where <group> is the name of the group you cannot access: **cd \mcadam\<group>** and then **del lock.xxx**.

MCINSTAL: ANOTHER WAY TO CONFIGURE YOUR SYSTEM!

The MCINSTAL program creates the files C:\AUTOEXEC.CAD and C:\CONFIG.CAD that tailor your system environment so MICRO CADAM can run.

Follow these steps to configure your system:

NOTE: Backup your autoexec.bat & config.sys, & read step 23 on pg 1-26 before starting)

1. **RUN THE MCINSTAL PROGRAM:** Change to the C:\MCADAM directory (assuming that the MICRO CADAM PROGRAM is loaded on drive C). Type **cd \mcadam** and press the enter key. Your prompt should now read **c:\mcadam>**

   To run the MCINSTAL program, type **MCINSTAL** and press the enter key.

2. The logon information screen shown at the right now appears. Press any key to continue to the next screen.

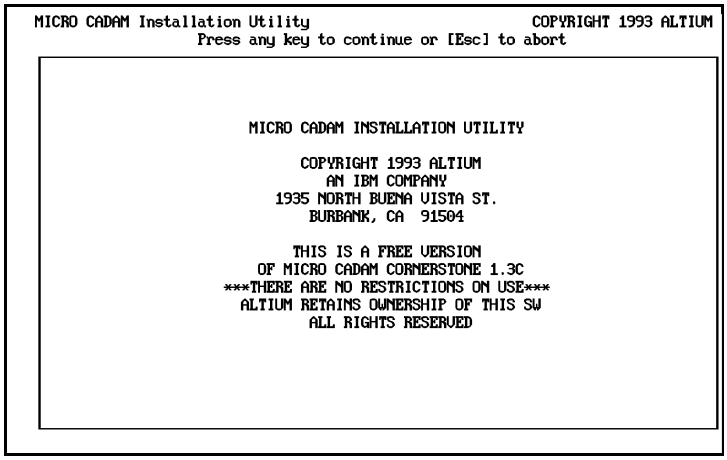

3. Enter the drive where MICRO CADAM is installed. Once you press the enter key the next screen is displayed.

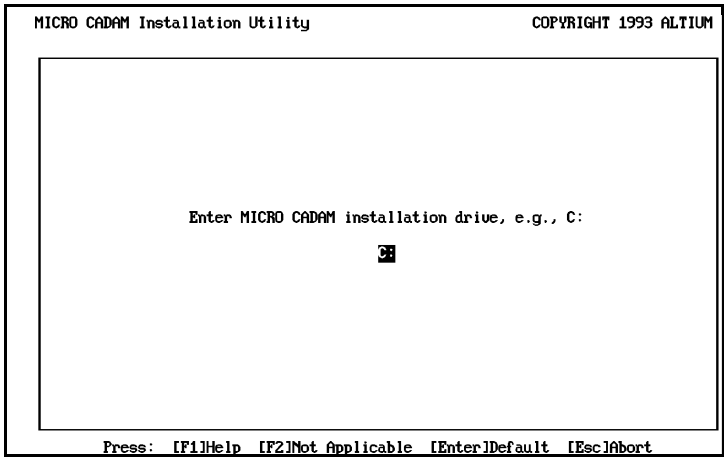

4. Enter the path to the DOS directory. Once you press the enter key the next screen is displayed.

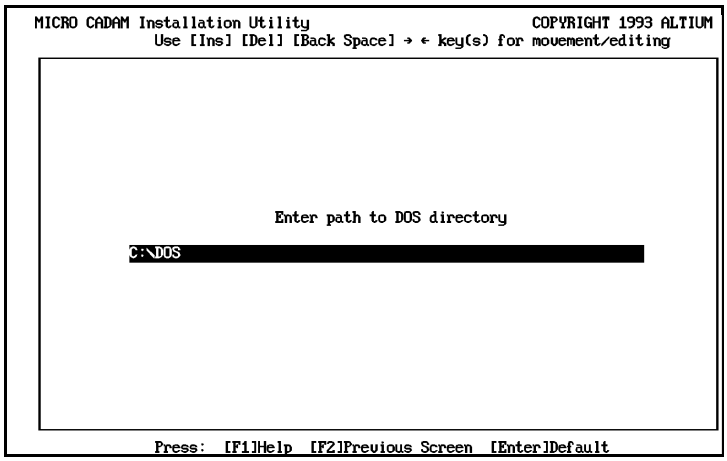

5. If you purchase the MICRO CADAM Data Transfer option, you can transfer drawings to and from MAINFRAME CADAM. Unless you will be running data transfer via 3270 to MAINFRAME CADAM accept the default answer of NO. Once you press the enter key the next screen is displayed.

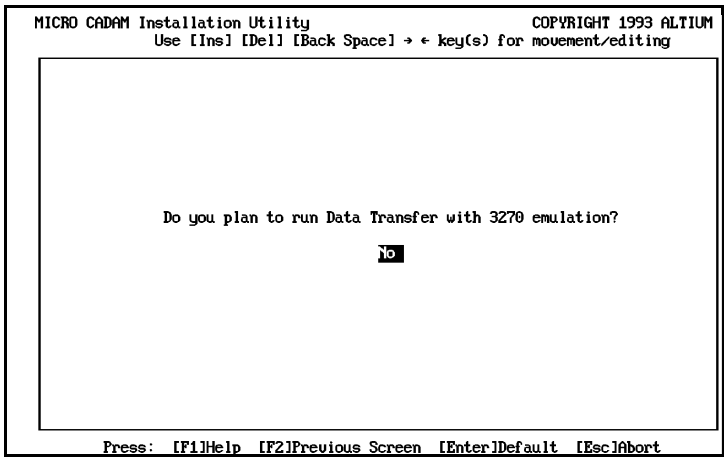

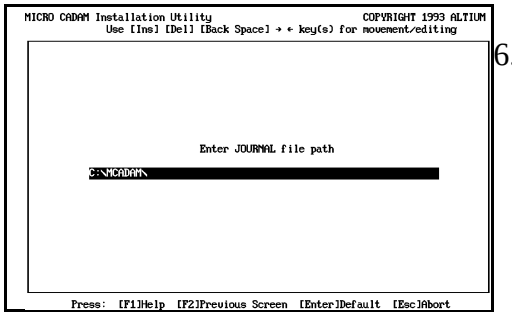

6. As you use MICRO CADAM, your work is monitored in two crash-protection files. Enter the path name for the subdirectory in which you would like these files stored and press the Enter key. Accept C:\MCADAM (assuming MICRO CADAM software is loaded onto drive C). Once you press the enter key the next screen is displayed.

7. Select the location of the MICRO CADAM Function Key Box. Since you will not have one, accept the default option that the function key box is not present. Once you press the enter key the next screen is displayed.

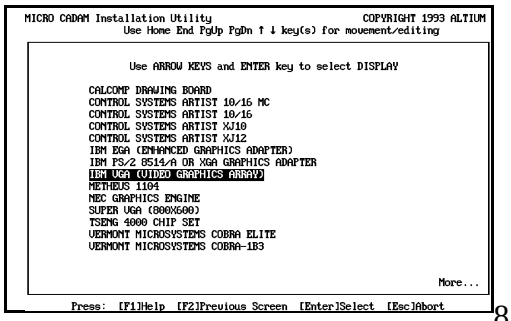

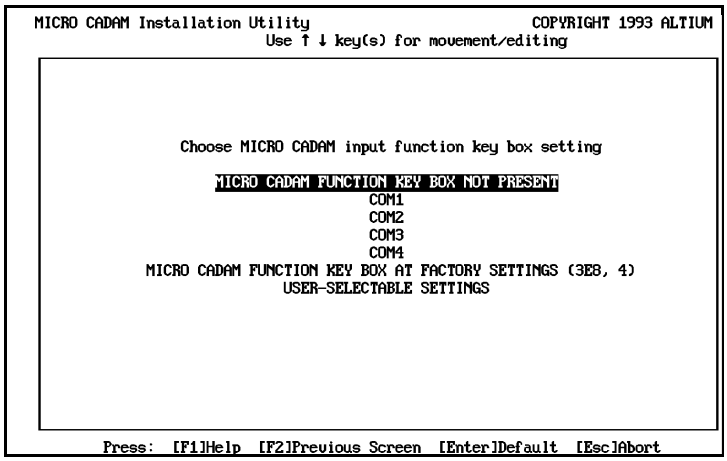

8. Select your display adapter and press the enter key. The next screen is now displayed.

9. Select the mouse or tablet you are using and press the enter key. The next screen is now displayed.

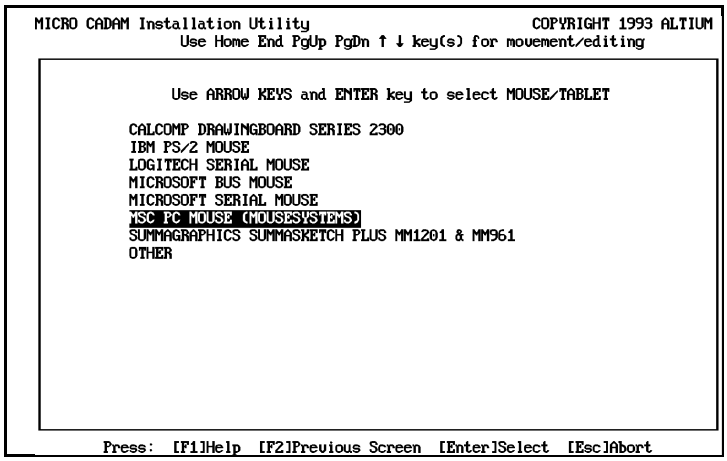

10. Select the appropriate COM port number for your mouse or tablet, then press the enter key. The next screen is now displayed. NOTE THE OPTIONS AND MAKE SURE

YOUR MOUSE IS CONFIGURED FOR THIS PORT. SEE YOUR MOUSE DOCUMENTATION FOR MORE INFORMATION.

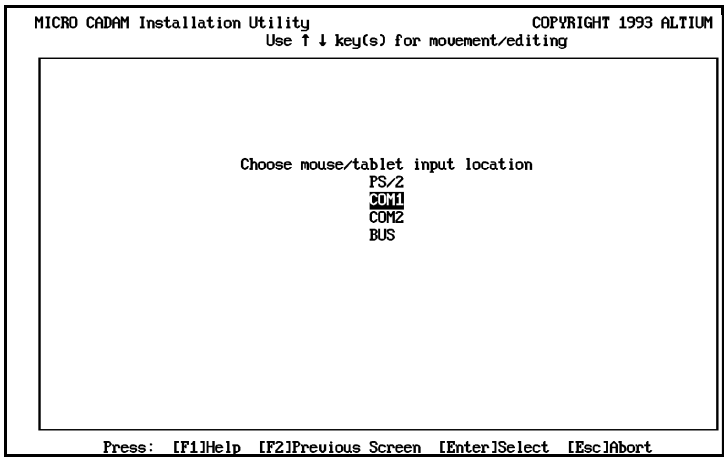

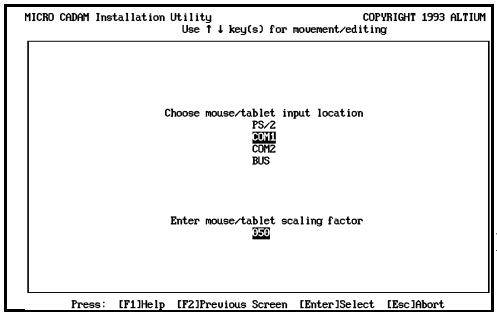

11. Enter the mouse/tablet scaling factor. The scaling factor determines how responsive your input device is to movement. An entry of 100 means there is a one-to-one correspondence between motion and input. (your entry must be 100 or less). An entry of 50 means that 50 percent of the movement causes the same response, so the device is twice as sensitive. The lower the value, the higher the sensitivity. The higher the value, the lower the sensitivity.

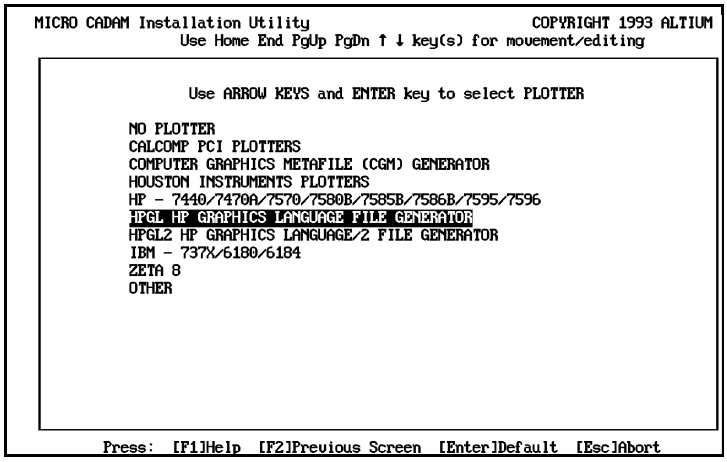

12. Press ENTER to select the default setting "No Plotter", if no plotter is attached to your system. (The plotter port parameter is then by-passed.

    The list of plotters supported by MICRO CADAM is displayed. Select the plotter you are using. If you select the HPGL File Generator as your plotter choice, you are prompted for the model ID of the plotter you wish to emulate. Enter the model ID and press ENTER.

13. Highlight the correct parameters for your plotter. As you move between fields, the currently selected parameters are displayed at the bottom center of the screen. When the

parameters are as you want, press ENTER to move to the next screen.

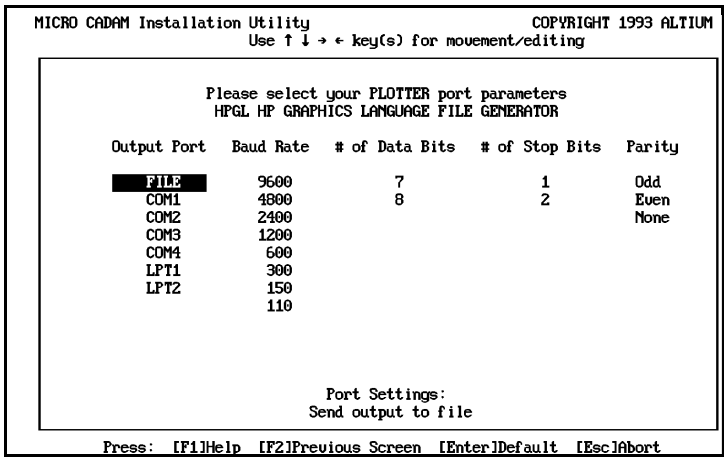

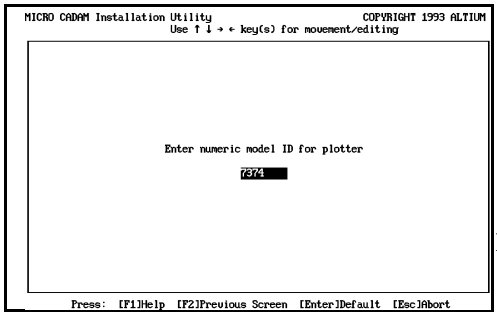

14. Enter the numeric model ID for the plotter. If you selected a plotter in the previous screen, you may be asked to enter the model ID here.

15. In this case, since we have selected an HPGL driver an advisory message appears. See the file HPGL.DOC in the \MCADAM directory for more information on HPGL.

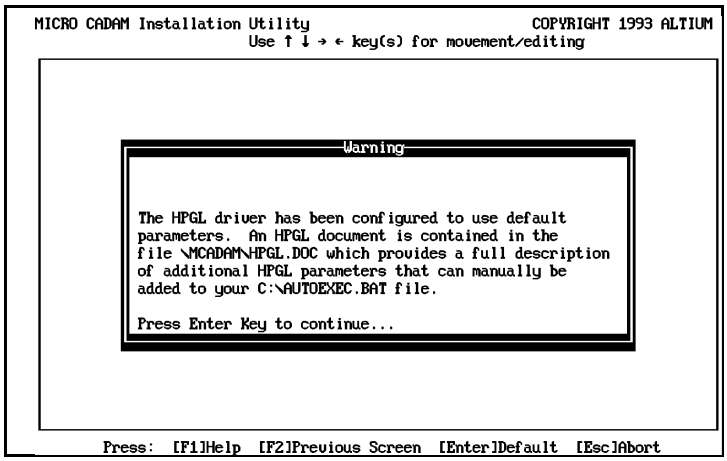

16. Select your printer choice on this screen. MICRO CADAM uses a printer to print your CAD models. It does not use it for ascii text. You should only have ONE printer OR ONE plotter defined at any one time.

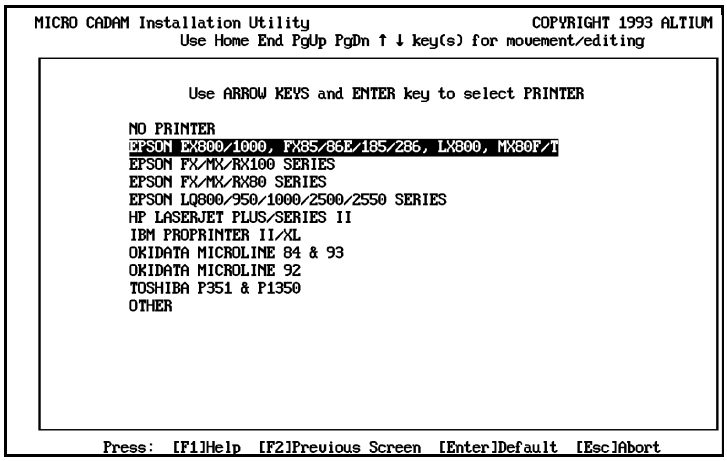

If the printer is not shown on the list, and you have an appropriate driver, select OTHER from the list, then enter the name of the diver as prompted. The default subdirectory and driver are shown. Use the arrow keys to enter the desired name following the subdirectory. You must copy the driver to the \MCADAM\DRIVERS subdirectory after MCINSTAL is finished.

17. The plotter option screen now appears if you have selected a plotter in the Plotter Choice screen.

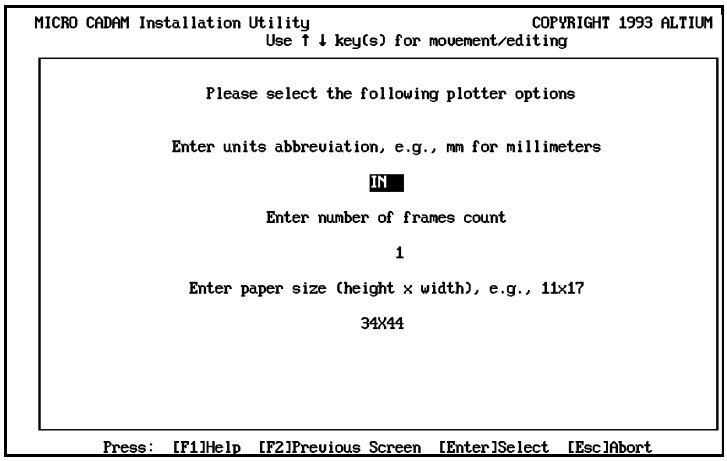

You can change the units used for calculating paper size. Type in the unit's abbreviation at the prompt. The possible entries are IN (inches) and MM (millimeters). The default setting is inches. This variable affects the Paper Size entry.

MICRO CADAM supports long plots (plots longer than 45 inches) on the HP 7586, CalComp 1044GT and IBM 7375B plotters with roll feed. Newer variations of these plotters should also work.

Enter the number of 45-inch frames necessary for the plot. This number is also used to calculate the resolution of the plot and to provide MICRO CADAM with the correct number of steps in the X axis (width). Since the longer the plot, the worse the resolution, always use the smallest number of frames in which the plot will fit. The default value is 1 frame (45 inches). For example, if you know that a model will plot out to 150 inches, enter 4, which accommodates plots of up to 180 inches (4 x 45).

Calcomp plotters do not supply paper size information to the driver, therefore, a paper size value must be supplied through the DOS environment.

18. A summary of the current configuration is now presented. Press the enter key to continue.

```
MICRO CADAM Installation Utility                    COPYRIGHT 1993 ALTIUM

   Function key box not present
   DOS directory path is C:\DOS
   PC 3270 emulation software directory path not set
   Recovery journal path is C:\MCADAM\
   IBM VGA (VIDEO GRAPHICS ARRAY)
   DEVICE=C:\MCADAM\DRIVERS\IBMVGA12.SYS
   MSC PC MOUSE (MOUSESYSTEMS)
   Mouse options: COM1, Scale = 050
   DEVICE=C:\MCADAM\DRIVERS\MSMOUSE.SYS
   HPGL HP GRAPHICS LANGUAGE FILE GENERATOR
   DEVICE=C:\MCADAM\DRIVERS\HPGL.SYS (7374)
   Plot File
   No Printer
   Units set to IN
   Paper size and number of frames set to 34X44, 1

        Press:  [F2]Previous Screen  [Enter]Save This Data  [Esc]Abort
```

19. This screen at the right now appears. Press the enter key to view and edit the autoexec.cad file, or type NO to skip this screen. Let's take a look at the autoexec.cad file. Press the enter key.

```
MICRO CADAM Installation Utility                    COPYRIGHT 1993 ALTIUM
                        Use ↑ ↓ key(s) for movement/editing

                  Would you like to edit the new AUTOEXEC.CAD file?

                                  Yes

        Press:  [F1]Help  [F2]Previous Screen  [Enter]Default  [Esc]Abort
```

20. The autoexec.cad file is now shown. You may edit this screen if desired. (You may need to replace the MSMOUSE line with one that loads your own mouse driver.) Press the ESC key to exit the screen.

```
MICRO CADAM Installation Utility                    COPYRIGHT 1993 ALTIUM
                                C:\AUTOEXEC.CAD
@ECHO OFF
PROMPT=$p$g
PATH=C:\;C:\DOS;C:\MCADAM;C:\MCADAM\BIN;C:\MCADAM\GIMSAMPL;
SET MCADAM= /dMOUSE /c03F8 /s050
SET JOURNAL=C:\MCADAM\
SET PLOT_ID=7374
SET PAPER_SIZE=34X44
C:
CD \MCADAM
MSMOUSE
MENU

                    Press:  [F1]Help  [Esc]Exit Editor
```

21. A screen now appears, asking you if you want to edit the config.sys file. Accept the YES by pressing the enter key.

```
MICRO CADAM Installation Utility                    COPYRIGHT 1993 ALTIUM
                        Use ↑ ↓ key(s) for movement/editing

                Would you like to edit the new CONFIG.CAD file?

                                Yes

        Press:  [F1]Help  [F2]Previous Screen  [Enter]Default  [Esc]Abort
```

22. The config.cad file is now shown. You may edit this screen if desired. Press the ESC key to exit the screen.

```
MICRO CADAM Installation Utility                    COPYRIGHT 1993 ALTIUM
                                C:\CONFIG.CAD
FILES=20
BUFFERS=20
SHELL=C:\COMMAND.COM /E:384 /P
DEVICE=C:\MCADAM\DRIVERS\MSMOUSE.SYS /G:MOUSE
DEVICE=C:\MCADAM\DRIVERS\IBMVGA12.SYS
DEVICE=C:\MCADAM\DRIVERS\HPGL.SYS
DEVICE=C:\MCADAM\DRIVERS\GSSCGI.SYS
BREAK=ON

                    Press:  [F1]Help  [Esc]Exit Editor
```

23. This screen now appears, asking if you want to replace your existing autoexec.bat and config.sys files. **Accept the NO prompt.** The files are now saved as autoexec.cad and config.cad in the root directory of drive C.

    CAUTION: If you say YES, your existing autoexec.bat and config.sys files will be overwritten!

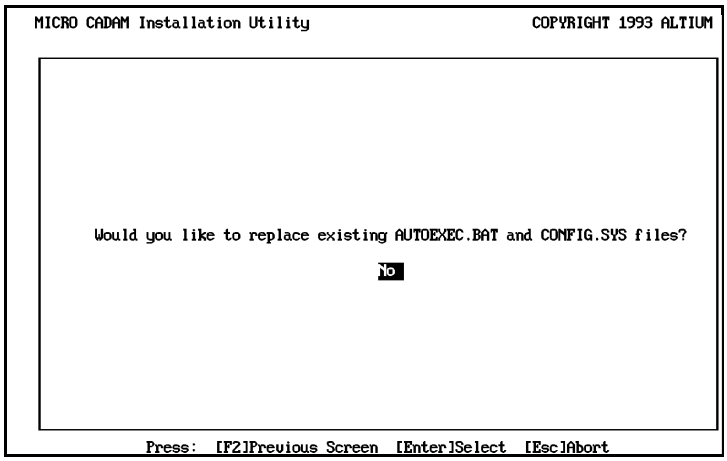

24. A screen now appears asking if you want to view the README.DOC file. Accept the YES prompt to read any additional information on the README.DOC screen. After reading this file press the ESC key.

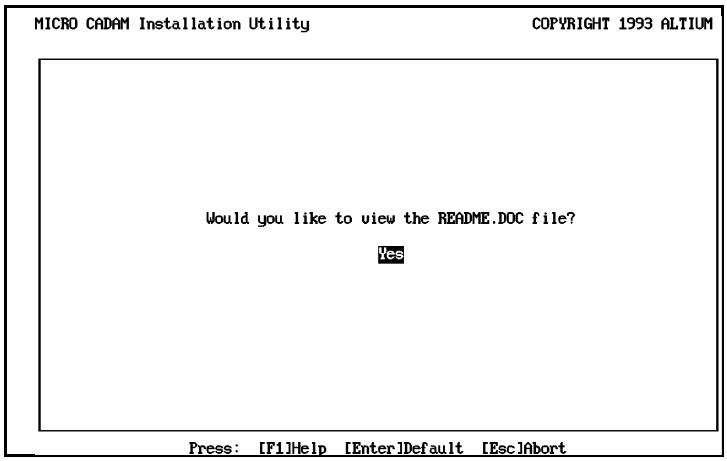

25. You are now returned to the DOS prompt. A message appears (see screen at the right) advising you how to reconfigure and reboot your system to run MICRO CADAM.

    You are now finished the MCINSTAL.EXE program!

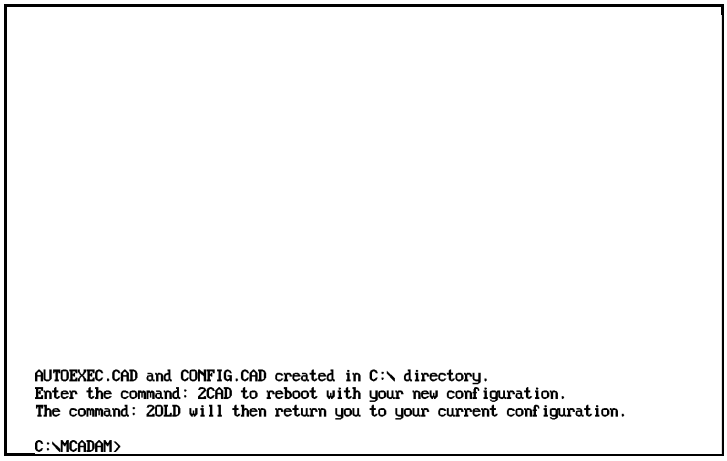

MCOPT: CONFIGURING YOUR SYSTEM DEFAULTS!

The program MCOPT.EXE (i.e. MICRO CADAM Options) allows you to set your program defaults. For example, this tells the program to start each new blank drawing in inches and have 3 decimal places for dimensions. Lets go and set the options now. Start the MCOPT.EXE program and set the program defaults as follows:

1. Change to the drive where MICRO CADAM is loaded (e.g. type C: and press the enter key.

2. Change to the \MCADAM directory (e.g. type cd \MCADAM and press the enter key).

3. Run the MCOPT program (e.g. type MCOPT and press the enter key). (NOTE: You may also run the command **MENU** and then select the Defaults option from the menu).

4. The screen at the right side is presented. Press any key to continue.

```
MICRO CADAM SYSTEM DEFAULT UTILITY                                  (C) 1993 ALTIUM
            PRESS ANY KEY TO CONTINUE OR PRESS [ESC] TO ABORT

                    MICRO CADAM SYSTEM DEFAULT UTILITY

                         COPYRIGHT 1993 ALTIUM
                             an IBM Company
                         1935 N. Buena Vista St.
                            Burbank, CA 91504

                        THIS IS A FREE VERSION
                     OF MICRO CADAM CORNERSTONE 1.3C
                  ***THERE ARE NO RESTRICTIONS ON USE***
                   ALTIUM RETAINS OWNERSHIP OF THIS SW
                          ALL RIGHTS RESERVED
```

5. The screen at the right side is now presented. Enter a number which will indicate the units that a new drawing will be started in and press the F10 function key. For example, enter 1 to have a new drawing start in units of inches, and then press the F10 key.

```
MICRO CADAM SYSTEM DEFAULT UTILITY                                  (C) 1993 ALTIUM
                        ENTER '1' through '6'

                          1. Inches
                          2. Feet
                          3. Millimeters
                          4. Centimeters
                          5. Meters
                          6. Other

                 ENTER THE NUMBER OF THE DESIRED UNITS: 1

          PRESS:  [F5]RESET     [F10]UPDATE      [ESC]ABORT
```

6. Once the units default is set, the first of the main System Default Utility screens shown at the right appears. Change the defaults as you wish. Note that a message line appears near the top of the screen telling you the permissible entries as you move from prompt to prompt. When you have finished altering the defaults, press the F10 key on the keyboard to update the changes.

```
MICRO CADAM SYSTEM DEFAULT UTILITY                                  (C) 1993 ALTIUM
                    Key view convention - 1ST or 3RD angle

INCHES
            View convention                          : 3RD
            Grid spacing                             : 0.3937
            Symbol function dot radius               : 0.039370
            Symbol function triangle width           : 0.314961
            Symbol function rectangle width          : 0.393701
            Symbol function rectangle height         : 0.196850
            Dimension decimal places                 : 3
            Angular dimension flag                   : -3
            Dimension standard                       : 1
            Dimension text height                    : 0.164062
            Dimension overshoot length               : 0.090000
            Length of tail on flipped dimension      : 0.250000
            Distance at which dimension line flips   : 0.390000
            Gap on extension line in dimension       : 0.100000
            Gap code                                 : 5
            Radius of dot on dimensions              : 0.050000

 ARROW KEYS - UP/DOWN      PRESS:  [F5]RESET     [F10]UPDATE      [ESC]ABORT
```

7. The screen shown at the right allows you to set the remainder of your MICRO CADAM defaults. When you are finished altering these defaults, press the F10 key on the keyboard to update the changes. Note the *Plotter pen control mode* option for HPGL discussions later in this chapter.

```
MICRO CADAM SYSTEM DEFAULT UTILITY                                  (C) 1993 ALTIUM

INCHES
            Default character height                 : 0.164062
            Default character width                  : 0.117188
            Default horizontal character spacing     : 0.164062
            Default vertical character spacing       : 0.246094

            Plotter pen control mode                 : 0
            Plotter x offset                         : 0.000000
            Plotter y offset                         : 0.000000
            Plotter arrow scale mode                 : 1

 ARROW KEYS - UP/DOWN      PRESS:  [F5]RESET     [F10]UPDATE      [ESC]ABORT
```

8. A pop-up menu now appears on the screen shown at the right. Press the **Y** key on the keyboard (i.e. Yes) to save the changes you have made and return to the DOS prompt.

```
MICRO CADAM SYSTEM DEFAULT UTILITY                                  (C) 1993 ALTIUM

INCHES
            Default character height                 : 0.164062
            Default character width                  : 0.117188
            D                                                   62
            D                                                   94
                  Do you want to save your changes?
            P       Y/N (ESC returns to program)
            P                                                   00
            P                                                   00
            Plotter arrow scale mode                 : 1

 ARROW KEYS - UP/DOWN      PRESS:  [F5]RESET     [F10]UPDATE      [ESC]ABORT
```

PARAMETER DESCRIPTIONS: The parameter descriptions for the MCOPT Default programs follow:

- **VIEW CONVENTION:** View Convention is the default for geometry angle projection. Third angle is the United States standard for engineering drawing. Views of an object are obtained by projecting from the projection plane toward the object. First angle is the European standard for engineering drawings. Views of an object are obtained by projecting from inside the object toward the projection plane.

- **GRID SPACING:** Grid Spacing is the default for the distance between grid points established in the /GRID/ option of POINT function.

- **SYMBOL FUNCTION DOT RADIUS:** Symbol Function Dot Radius is the default for the radius of dots created in SYMBOL function.

- **SYMBOL FUNCTION TRIANGLE WIDTH:** Symbol Function Triangle Width is the default width (base) of triangles created in the SYMBOL function.

- **SYMBOL FUNCTION RECTANGLE WIDTH:** Symbol Function Rectangle Width is the default for the width of rectangles created in the SYMBOL function.

- **SYMBOL FUNCTION RECTANGLE HEIGHT:** Symbol Function Rectangle Height is the default for the height of rectangles created in the SYMBOL function.

- **DIMENSION DECIMAL PLACES:** Dimension Decimal Places is the default for the number of decimal places displayed for dimensions. If a negative number is entered, dimensions are rounded to the nearest fractional value. For example, if the default is -8, dimensions are rounded to the nearest eighth. Decimal places may also be set to zero.

- **ANGULAR DIMENSION FLAG:** Angular Dimension Flag is the default for the number of digits displayed for angular dimensions.

  3 = angle in degrees to three decimal places
  2 = angle in degrees to two decimal places
  1 = angle in degrees to one decimal place
  0 = angle in degrees round off
  -1 = angle in degrees rounded off
  -2 = angle in degrees and minutes
  -3 = angle in degrees, minutes and seconds

- **DIMENSION STANDARD:** Dimension Standard is the default for the type of dimensioning standard. (1 = STANDARD, 2 = ISO)

- **DIMENSION TEXT HEIGHT:** Dimension Text Height is the default dimension text height.

- **DIMENSION OVERSHOOT LENGTH:** Dimension Overshoot Length is the default for the length of an extension line goes past the dimension line.

- **LENGTH OF TAIL ON FLIPPED DIMENSION:** Length of Tail of Flipped Dimension is the default for the tail length of an arrow on a flipped dimension.

- **DISTANCE AT WHICH DIMENSION LINE FLIPS:** Distance at Which Dimension Line Flips is the default for the minimum value a dimension can be before it automatically flips.

- **GAP ON EXTENSION LINE IN DIMENSION:** Gap of Extension Line in Dimension is the default for the amount an extension line is shortened or lengthened when menu options /SHORT/ or /LONG/ are selected in /SPEC/, //GAP TYPE/ of the DIMENSION function.

- **GAP CODE:** Gap Code is the default specifying the gap between an extension line and a dimension line.

  4 = no gap
  5 = shortened by gap amount (default above)
  6 = lengthened by gap amount (default above)

- **RADIUS OF DOT ON DIMENSION:** Radius of Dot on Dimension is the default for the radius of a dot and condition on a dimension.

- **DEFAULT CHARACTER HEIGHT:** Default Character Height is the default height of text created in the NOTE function.

- **DEFAULT CHARACTER WIDTH:** Default Character Width is the default width of text created in the NOTE function.

- **DEFAULT HORIZONTAL CHARACTER SPACING:** Default Horizontal Character Spacing is the default spacing for text created in the NOTE function.

· **DEFAULT VERTICAL CHARACTER SPACING:** Default Vertical Character Spacing is the default spacing for text created in the NOTE function.

· **PLOTTER PEN CONTROL MODE:** Plotter Pen Control Mode is the default for controlling the pens on your plotter. There are two valid entries:

0 - BY COLOR: Your plotter pens are mapped to element color. Elements of a specified color table number are plotted by an assigned pen. Color #1 is plotted by pen #1; color #2 is plotted by pen #2, etc.

The chart below shows the exact pen assignments:

Color number	1	2	3	4	5	6	7	8	9	10	11
Pen Assignments 8-pen plotter	1	2	3	4	5	6	7	8	1	2	3
4-pen plotter	1	2	3	4	1	2	3	4	1	2	3
2-pen plotter	1	2	1	2	1	2	1	2	1	2	1

1 - BY LINE WEIGHT: Your plotter pens are mapped to line weight. Elements with a light line weight are drawn by pen 1; medium line weights are drawn by pen 2; heavy line weights are drawn by pen 3.

· **PLOTTER X OFFSET and PLOTTER Y OFFSET:** The Plotter X and Plotter Y offsets defaults allow you to set the offset distance for a sheet of paper in the plotter. This can help in positioning your plot on the plotting paper (for example so the entire plot will fit onto a piece of plotting paper properly, or to align the title block onto preprinted paper). Set the X or Y offset as required to move the geometry in the desired direction.

· **PLOTTER ARROW SCALE MODE:** Plotter Arrow Scale Mode determines whether the arrows will scale when plotted. There are two valid entries:

0 - The arrow will not be scaled with the plot
1 - The arrow will be scaled with the plot

GRAPHIC BOARD DRIVERS:

CONFIGURING YOUR MICRO CADAM DISPLAY!

The following chart lists the Graphic Board Drivers supported in this FREE VERSION of MICRO CADAM software.

DISPLAY DRIVERS	ENVIRONMENT COMMANDS (SEE CHART ON NEXT PAGE)	COMMENTS
ART10CGI.SYS		ARTIST XJ10 @ 1024 x 768
ART12CGI.SYS	7	Artist XJ12 @ 1280 x 1024
ARTISTMC.SYS		Artist 10/16 MC @ 1024 x 768. Pop-up FKBox & Side Bar Menu
ARTXJ10.SYS		Pop-up FKBox & Side Bar Menu
CGIDGIS.SYS		NEC MultiSync Graphics Engine @ 1024 x 768
CALDISPB.SYS		CalComp Drawing Board @ 1024 x 768
ET4000.SYS	5	Any Board that has TSENG 4000 chip set on it.
HRVGA.SYS	6	VGA 800 x 600: see SUPERVGA.DOC file in \MCADAM : Pop-up FKBox & Side Bar Menu
IBMAFH.SYS		IBM 8514 @ 1024x768. Interface code req'd. Side Bar Menu.
IBMEGA.SYS	1,2,3,4	IBM EGA (and clones) @ 640x350, 16 color. Pop-up FKBox and Side Bar Menu.
IBMVGA12.SYS		IBM VGA (and clones) @ 640x480, 16 color. Pop-up FKBox and Side Bar Menu.
IMVDI2.SYS		VMI Cobra-1B3 & VMI Image Mgr. 1024-1B3 @ 1024 x 768. Side Bar Menu
METHEUS.SYS		Metheus 1104 and Metheus 1104 Plus @ 1024 x 768, Microcode required
VDIPG12.SYS		Matrox PG1280A @ 1280 x 1024.

DISPLAY DRIVERS	ENVIRONMENT COMMANDS (SEE CHART ON NEXT PAGE)	COMMENTS
VMCGIS.SYS		VMI Cobra/2 @ 1024 x 768. Pop-up Side Bar. Requires DOS driver.
VMCGISE.SYS		VMI COBRA Elite @ 1024 x 768

The environment commands are entered in the autoexec.cad (or autoexec.bat) file.

The environment commands for display drivers are shown in the following table:

COMMAND NO.	ENVIRONMENT COMMANDS FOR DISPLAY DRIVERS	RESULTS/ACTIONS
1	SET EGA=MR3	Sets video board for 16 colors, resolution 320x200
2	SET EGA=HR3	Sets video board for 16 colors, resolution 640x200
3	SET EGA=HR4	Sets video board for 4 or 16 colors, resolution 640x350 (default)
4	SET EGA=MONO	Sets video board for monochrome (4 color values), resolution 640x350
5	SET ET4000=	1024,768 or 800,600
6	SET VGA=800,600,xxh	Sets video board for 16 colors at 800 x 600 resolution. "xx" should be replaced with the mode address listed in SUPERVGA.DOC in \MCADAM
7	SET DISPLAY=ART12CGI SET MONITOR=C:\MCADAM\DRIVERS\ARTIST12.SET /W2 SET ARTPORT=nnn	These commands pertain only to the Artist X12 monitor. The nnn should be replaced with the board address (e.g. 3E0)

INPUT DRIVERS:

CONFIGURING YOUR MOUSE OR TABLET!

The following chart lists the Input Drivers supported in this FREE VERSION of MICRO CADAM software.

INPUT DRIVERS	ENVIRONMENT COMMANDS (SEE CHART ON NEXT PAGE)	COMMENTS	BUS·SERIAL·PS/2 Mport
CALCOMPB.SYS	1,3,4,5	TABLET: Calcomp Drawingboard 2300	S
MOUSESYS.SYS	2,3	MOUSE: MSC Mouse Systems, Logitech, & Torrington Mouse (Serial)	S
MSMOUSE.SYS	2,3	MOUSE: MS Mouse & Logitech (serial/bus). Install MOUSE.COM or MOUSE.SYS (Pick one)	B/S
· MOUSE.COM		MOUSE: Normally included with your mouse. Install in the Autoexec.bat.	
· MOUSE.SYS		MOUSE: Normally included with your mouse. Install in the Config.sys.	
PS2MOUSE.SYS		MOUSE: IBM PS/2 Mouse (bus). 2 buttons. Use keyboard PF2 key for Y/N function.	PS/2
SUMMATB.SYS	1,3	TABLET: Summagraphics MM961 (i.e. 6" x 9"), and Summagraphics tablet MM1201 (i.e. 12" x 12") @ 9600,N,8,1	S

The environment commands are entered in the autoexec.cad (or autoexec.bat) file.

The environment commands for input drivers are shown in the following table:

COMMAND NO.	ENVIRONMENT COMMANDS FOR INPUT DRIVERS	RESULTS/ACTIONS
1	SET TABLET=(driver filename)	Redirects application to specified input device. Enter driver filename without the .SYS extension. (e.g. SET TABLET=SUMMATB)
2	SET MOUSE=(driver filename)	Redirects application to specified input device. Enter driver filename without the .SYS extension. (e.g. SET MOUSE=MSMOUSE)
3	SET (driver filename)=(COM#)	Enter the driver filename without the .SYS extension. Directs application to **COM1** (default) or **COM2**. (e.g. SET SUMMATB=COM2)
4	SET TABSIZEX=(width)	Specify tablet width in 100ths of an inch.
5	SET TABSIZEY=(height)	Specify tablet height in 100ths of an inch.

OUTPUT DRIVERS:

CONFIGURING YOUR PRINTER OR PLOTTER!

The following chart lists the Output Drivers supported in this FREE VERSION of MICRO CADAM software.

OUTPUT DRIVERS	DEVICE	ENVIRONMENT COMMANDS (SEE CHART ON NEXT PAGE)	COMMENTS	FILE / SERIAL / PARALLEL (F/S/P)
CCP.SYS	PLOTTER	6,11,15,17,19,20 (also see CALCOMP.DOC in the \MCADAM directory	Calcomp (906 data). Width unrestricted, electrostatic support	F/S/P
EPSON80.SYS	PRINTER	1,9	Epson FX/MX/RX80 series, EX800 @ 9-pin, 11" x 14" max.	P
EPSON100.SYS	PRINTER	1,3,9	Epson FX/MX/RX100 Series FX286, EX1000 Series @ 9-pin, 11" x 14" max.	P
EPSONLQ.SYS	PRINTER	1,3,4,9,14,26,32	Epson LQ800/950/1000/2500/2550 Series @ 24-pin, 11" x14" max. Requires Font files IHW12x24.FNT and IHW18x24.FNT.	P
EPSONX.SYS	PRINTER	1,3,4,9,14,26,32	Epson EX800/1000, FX85/86e/185/286 (only), LX800, MX80F/T, MX100III. 120 dpi resolution only. Requires font files IHW12x24.FNT and IHW12x24.FNT.	
HIDMPL.SYS	PLOTTER	8,15	Houston Instruments plotters, (includes series 60) DM-PL data	S (Com1 only)
HPGL.SYS	PLOTTER	2,6,15,16,17,18,19,21,31,37,38 (also see HPGL.DOC in the \MCADAM directory)	HP7440, 7475, 7550, 7580, 7586. OCE G1830-CR. Xon/Xoff support	F/S/P
HPGL2.SYS	PLOTTER	6,15,16,17,18,21,37,39,42,43 (also see HPGL2.DOC in the \MCADAM directory)	HP Plotters; Electrostatic plotters; Laserjet III printer	F/S/P
IBMPRO.SYS	PRINTER	1,3,4,9,14,23,32	IBM Proprinter II/XL (but NOT the 24 pin X24 & XL24 printer)	

OUTPUT DRIVERS	DEVICE	ENVIRONMENT COMMANDS (SEE CHART ON NEXT PAGE)	COMMENTS	FILE / SERIAL / PARALLEL (F/S/P)
LASERJET.SYS	PRINTER	1,4,23	HP Laserjet Plus @ 150 dpi/Series II @ 300 dpi w/2 MByte RAM.	P
META.SYS	PLOTTER	15,33	GSS CGM (Computer Graphics Metafile). Plots one model to a file.	F
OKID290.SYS	PRINTER	2,3,4,13,14,23,32	Works with Okidata 92, 93 and 293 printers. Requires font files IHW6X16.FNT, IHW12X3.FNT and IHW6X8.FNT. If you have problems with this driver, try OKID84.SYS and OKID92.SYS	P
PLOTHP.SYS	PLOTTER		HP Plotters. HPGL direct 2-way communication between CPU & plotter req.	S
TOSHIBA.SYS	PRINTER	1,3,4,9,32,34	Toshiba P351, P1350.	P
ZETA8.SYS	PLOTTER	9,15	Zeta 8 plotter. Does NOT work with Zeta large format plotters	S

The environment commands are entered in the autoexec.cad (or autoexec.bat) file.

The environment commands for output drivers are shown in the following table:

COMMAND NO.	ENVIRONMENT COMMAND FOR OUTPUT DRIVERS	RESULTS/ACTIONS
1	SET ORIENTATION=(orientation)	**PORTRAIT** does not rotate output (default). **LANDSCAPE** rotates output 270 degrees. (Ex: SET ORIENTATION=LANDSCAPE)
2	SET ORIENTATION=(orientation)	**LANDSCAPE** does not rotate output (default). **PORTRAIT** rotates output 90 degrees. (Ex: SET ORIENTATION=PORTRAIT)
3	SET PAPER=(mode)	**NARROW** sets output to 8.5" x 11" (default). **WIDE** sets output to 11" x 14". (Ex: SET PAPER=WIDE)
4	SET PAPER=ISOA4	European paper (210mm x 297mm).

COMMAND NO.	ENVIRONMENT COMMAND FOR OUTPUT DRIVERS	RESULTS/ACTIONS
6	SET PAPER_SIZE=(width)x(height)	Enter whole numbers of paper size. (Ex: SET PAPER_SIZE=9X11)
8	SET (driver filename)=(COM#)	Directs output from specified driver to **COM1, COM2,** or **COM3.** (Example: SET HPGL=COM1)
9	SET (driver filename)=(LPT#)	Directs output from specified driver to **LPT1, LPT2,** or **LPT3.** (Ex: SET EPSONLQ=LPT2)
11	SET ELECTR=YES	Add this line to the Autoexec.bat file when plotting to a CalComp Electrostatic 5700 or 5800 series. (See the file CALCOMP.DOC in the \MCADAM directory for additional information).
13	SET SHEETFEEDER=(mode)	Informs driver that the cut sheet feeder is being used. **OFF** sets .5" top and bottom margins (default). **ON** sets 1" top margin and .5" bottom margin. If the setting is ON, insure that DIP switch 1-8 is set to on position, otherwise to off. (Ex: SET SHEETFEEDER=ON)
14	SET FF=(feed mode)	**ON** sets form feed on (default); after graphics are printed on a page the paper will form feed. **OFF** sets form feed off; after graphics are printed on a page the paper will not form feed.
15	SET PLOTTER=(driver filename)	Redirects application to specified device. Enter driver filename without .SYS extension. (Ex: SET PLOTTER=HPGL)
16	SET FLAGGING=X	Sets handshaking for Xon/Xoff.
17	SET UNITS=(drawing units)	**MM, FT, M, IN** (default). (Ex: SET UNITS=IN)
18	SET PLOT_ID=(model)	**7440** (default), **7475, 7470, 7550, 7580, 7586** HPGL (Hewlett Packard Graphics Language) emulation. For the IBM 6180 or 6184 plotters, specify 7570; for the IBM 7371 plotter, specify 7475; for the IBM 7372 or 7375 plotters, specify 7580. Use numeric characters only. (Ex: SET PLOT_ID=7475)
19	SET NFRAMES=(#)	Where # is the minimum number of 45" frames required to plot a drawing. Example: a model/drawing that is 86" in length would require a statement: SET NFRAMES=2.
20	SET CCP=(*, COM#, LPT#, or filename)	See the CALCOMP.DOC file in the \MCADAM directory for more information. (Ex: SET CCP=LPT1)

COMMAND NO.	ENVIRONMENT COMMAND FOR OUTPUT DRIVERS	RESULTS/ACTIONS
21	SET HPGL=(COM#, LPT#, or filename)	See the HPGL.DOC file in the \MCADAM directory for more information. (Ex: SET HPGL=FILE.PLT)
23	SET RESOLUTION=(resolution)	**75, 100, 150,** or **300** dpi. 2 Mbytes RAM is required in the output device for maximum resolution.
26	SET RESOLUTION=(resolution)	180 (default) or 120 dpi
31	SET (driver filename)=(filename)	Directs output to a specified DOS file. (Note: MCINSTAL does not offer an option to direct output to a file.) Enter driver filename without .SYS extension. To direct the output file to a printer, enter the following DOS command at the prompt of the subdirectory in which the file is located: **copy /b filename LPT#:** (Enter the parallel port number in place of "#".)
32	SET METAOUTPUT=(filename)	Allow user to specify a filename for a metafile created in the \MCADAM directory. If this statement is omitted, metafiles will default to the naming convention "METAFILE.DAT".
33	SET RESOLUTION=(resolution)	l80 (default) or 360 dpi
37	SET NR=OFF	This disables the NR (NOT READY) command issued at the end of the HPGL output on non rollfeed output device configurations. DEFAULT (ON).
39	SET COLOR=OFF	This variable maps all MICRO CADAM background colors to white and all geometry color to black.
42	SET LONG_AXIS=x	Where x is the length of the paper required for the plot. Using LONG_AXIS provides the capability to do long plots. Techniques used to achieve long plots result in loss of resolution of the plot. Therefore the smallest length required to fit the entire drawing should be used. Specify the x length by multiplying the number of pages or frames required for the plot width (w) specified in PAPER_SIZE. (See HPGL2.SYS section.)
43	SET ROTATION=x	This variable instructs the plotter to rotate the plot data by a certain angle, expressed in degrees. The four possible values of x are 0, 90, 180 and 270. The default rotation is 0.

IMPORTANT!!!

PLEASE READ THE FOLLOWING FILES IN THE \MCADAM DIRECTORY:

PLOTTER.DOC	Information on setting up your plotting and printing hardware. Includes information on cable pinouts and dip switch settings.
CALCOMP.DOC	Information about setting up and configuring calcomp plotters.
HPGL.DOC	Information on options and settings for the HPGL.SYS driver.
HPGL2.DOC	Information on options and settings for the HPGL2.SYS driver.
SUPERVGA.DOC	Information on options and settings for running super vga (i.e. 800 x 600)

SUPPORTED PLOTTERS AND PRINTERS:

The following is a partial list of plotters and printers that are compatible with MICRO CADAM.

PLOTTERS	
Calcomp	1023, 1025, 1041GT, 1042GT, 1043GT, 1044GT, 1025, 1075A, 1076C, 1077l, 9X5 series with PCI Controller, 105X and 103X series with 907 Controller, 5723, 5725, 5733, 5735, 5745, 5825, 5835, 5845, ColorMaster, PlotMaster, DrawingMaster
Hewlett-Packard	7440A, 7550A, 7470A, 7575A, 7570A, 7570A Draftpro, 7575A DraftPro DXL, 7576A DraftPro EXL, 7580B, 7585B, 7586B, 7595A DraftMaster, 7596A DraftMasterII, 7596A DraftMaster RX, 7600 models 240D, 240E Designjet
Houston Instruments	HIPLOT DMP-29, DMP-51, DMP-51, DMP-51MP, DMP-52, DMP-52MP, DMP-56, DMP-61, DMP-62
IBM	6180, 6184, 6186-1, 6186-2, 7370, 7371, 7372, 7374, 7375-1, 7575-2
Bruning (Nicolet)	Zeta 8, Zeta 824 & 836 - HPGL mode
JDL	850 EWS (use HPGL emulation)
PRINTERS	
Epson	80 series, 100 series, FX-286
Hewlett Packard	Laserjet Series II, IID, IIP, III, IV Printers
IBM	4201 Proprinter, 4202 Proprinter XL, 5152, 5182
Okidata	Microline 84, 92, 93
Toshiba	P1350
JDL	850 EWS (use Epson emulation)

NETWORKING:

INSTALLING AND RUNNING MICRO CADAM ON A NETWORK!

The MICRO CADAM FREE SOFTWARE is network capable. To install MICRO CADAM on a network, follow these steps:

1. Install your network hardware and software on each computer that will be on the network.

2. Install a separate copy of the MICRO CADAM FREE SOFTWARE on each computer that will be on the network. Install MICRO CADAM as you would on a single system. **You must have a separate copy of MICRO CADAM on each node of the network; you cannot install one copy of MICRO CADAM on the server and attempt to run multiple copies of it from the network nodes.** If you attempt to run multiple copies of MICRO CADAM from the server, you may have integrity problems with the temporary files used by the MICRO CADAM software.

   (NOTE: You may install a copy of the MICRO CADAM FREE SOFTWARE on each of the different drives on the server. For example, install one copy of MICRO CADAM on drives J, K, L, M, and N on the server.)

3. Use the DOS utilities to load DOS and various device drivers and TSR's high. Sample lines are shown below:

   IN THE CONFIG.SYS FILE:
   ```
   DEVICE=C:\DOS\HIMEM.SYS
   DEVICE=C:\DOS\EMM386.EXE NORAM
   DOS=HIGH,UMB
   DEVICEHIGH=C:\DOS\?????.SYS
   ```

   IN THE AUTOEXEC.BAT FILE:
   ```
   LOADHIGH C:\MOUSE\MOUSE
   ```

   MICRO CADAM requires approximately 483,000 bytes of RAM (i.e. memory) to load and run. A computer has 655,360 bytes of RAM available. This leaves 172,360 bytes for all other device drivers, TSR's, network drivers and DOS to fit into. If the amount of available memory becomes less than 483,000 bytes you will receive the message "**program too big to fit in memory**".

   To resolve this problem you must make available 483,000 bytes of RAM for MICRO CADAM to use. You can do this as follows:

   - Erase all unnecessary device drivers
   - Erase all unnecessary TSR's (i.e. terminate and stay resident) programs.

- Load DOS high (i.e. use DEVICE=HIMEM.SYS and DOS=HIGH commands in your config.sys file...assuming your version of DOS allows this).

- Load device drivers and TSR's high (use the DEVICE=EMM386.EXE NORAM and DEVICEHIGH=???????.SYS in the config.sys file, and LOADHIGH C:\????.COM in the autoexec.bat file). (NOTE: DO NOT LOAD THE MICRO CADAM GSSCGI.SYS DRIVER HIGH!)

- If your version of DOS does not allow you to load programs high, then use third party utilities to do so.

- Reboot your computer to free available memory (i.e. to erase existing TSR's from memory).

4. Add your network drivers to the config.sys and autoexec.bat files.

5. Reboot the computer and make sure that the network is live.

6. Run MICRO CADAM and make sure it is live. If you get the DOS error "**program too big to fit in memory**" it means that you do not have enough of your 640K memory left to run MICRO CADAM. Return to the config.sys and autoexec.bat files and try to save some more memory.

7. Let's assume that your network is now successfully installed (the network drive appears as drive H on the computer), and MICRO CADAM is up and running (on drive C) Log onto the network, then start MICRO CADAM and call up a drawing from drive C. Now select FKey FILE and submenu /DRIVE/. Key in the network drive **H** and press the enter key. File the drawing on drive H. (Note: you may have to create a group and user if this is the first time you are filing a drawing on drive H.) That's it! MICRO CADAM is now installed on your network. All MICRO CADAM nodes on the network can now access drive H and share their data files.

Note that the MICRO CADAM software must be loaded onto each node and runs from each node. It is only the MICRO CADAM data files that are shared on the network.

Printers and plotters can be attached to the network server. In a typical case MICRO CADAM would plot to parallel port LPT2. LPT2 on the node would be directed to a queue on the server which is in turn connected to server port LPT1. The plotter or printer would be connected to the server port LPT1.

When selecting FKey SYMBOL and submenu /SPECIAL/ you will also have to select the submenu /DRV/ option and key in the network drive to access special symbols.

MICRO CADAM creates a file called LOCK.XXX in the group currently being accessed. If you are on a network, and you attempt to access a group that someone else is using, you will get the message **GROUP LOCKED**. You must wait for the other user to finish their filing activities (i.e. finish a file or a call) before you may access it. Note that this LOCK.XXX file is only present while a user is actually accessing (i.e. filing or calling) a MICRO CADAM drawing. It is designed to prevent **simultaneous** access of the same file by two users, thereby possibly corrupting the file.

If your system crashes while you are using MICRO CADAM, **whether or not you are in a network**, the LOCK.XXX file may prevent you from accessing a group, although no one else is accessing it. You must delete the LOCK.XXX file from the appropriate DOS subdirectory to gain access to your group again. Type the following at the DOS prompt, where <group> is the name of the group you cannot access:

```
C:> cd \mcadam\<group>

C:> del lock.xxx
```

DOCUMENTATION FILES:

There are several documentation files located in the **\mcadam\docs** directory. They are listed as follows:

READ ME	ALL THE LATEST INFORMATION!...Please read! (Ascii Text)
INSTALL TXT	INSTALLATION Chapter in Ascii Text format
INTRO TXT	INTRODUCTION Chapter in Ascii Text format
INTRO WP	INTRODUCTION Chapter in Wordperfect 5.1 format
CONCEPTS WP	CONCEPTS Chapter in Wordperfect 5.1 format
QSTART TXT	QUICKSTART Chapter in Ascii Text format
QSTART ZIP	QUICKSTART Chapter in zipped Wordperfect 5.1 format
SHAREWAR TXT	SHAREWARE Chapter in Ascii Text format
SHAREWAR WP	SHAREWARE Chapter in Wordperfect 5.1 format

To view the Ascii text files use a text editor, or print them out.

To view the Wordperfect 5.1 files, load them into Wordperfect 5.1 and print them out. Note that

all of the graphics in these files will be printed out as well. This is the preferred method.

To view the zipped Wordperfect 5.1 files, you must first unzip them and then load them into Wordperfect 5.1. To unzip them, copy the PKUNZIP.EXE file from the first installation disk and type in the following command: **PKUNZIP QSTART.ZIP**. Repeat for the other zipped files.

PRINTCAD & PRINTGL: SHAREWARE PLOTTING PGMS:

PRINTCAD and PRINTGL are two **SHAREWARE** bonus utilities that are included with this book with the permission of the author, Cary Ravitz. These are two really excellent utilities that allow you to **PLOT** HPGL drawings onto your printer (as opposed to **PRINTING** them). Please see Chapter 31 (SHAREWARE BONUS UTILITIES) for more information on licensing, installation, setup and usage.

Q387: MATH COPROCESSOR SHAREWARE PGM:

Q387 is a **SHAREWARE** math coprocessor for 386 and 486 computers with some extended memory available. Should you have an AT class computer (i.e. an 80286) you **MUST** purchase an 80287 math coprocessor to run MICRO CADAM. This shareware version runs for 20 minutes before it dumps you out to DOS. You must then run it again for another 20 minute session. You may purchase this program and run it full time for a charge of US $25.00. Please see Chapter 31 (SHAREWARE BONUS UTILITIES) for more information on licensing, installation, setup and usage.

RECLAIMING HARD DISK SPACE:

ERASING UNNEEDED FILES.

After you have finished installing, configuring and testing MICRO CADAM, you may erase unneeded files from the hard disk to recover some of your hard disk space.

You will find the following subdirectories under the \MCADAM directory:

DOCS	Contains documentation files
BATCH	Contains configuration batch files
CAD	Contains MICRO CADAM drawing files (all files are hidden)
DRIVERS	Contains a complete selection of drivers
DXF	Contains the DXF translation files
MSGFIL	Contains the MICRO CADAM message files
SYS	Contains MICRO CADAM symbol drawing files (all files are hidden)
PRINTCAD	Contains PRINTCAD Shareware files
PRINTGL	Contains PRINTGL Shareware files
Q387	Contains Q387 Shareware files

You may erase all unneeded drivers in the \MCADAM\DRIVERS subdirectory. Check your autoexec.bat and config.sys files (and the autoexec.cad and config.cad files) to see which drivers you need. Backup all drivers onto diskette and then erase the unneeded drivers.

You may printout all documentation files in the \MCADAM\DOCS subdirectory and then erase all files there, however please leave the READ.ME file for future reference.

You may backup onto diskette all files in the \MCADAM\BATCH directory and then erase the files there.

If you elect not to use PRINTCAD, PRINTGL and Q387, you should first copy all files from these three subdirectories onto diskette and then erase the files in these directories.

CHAPTER 2 HOW DO I USE THIS BOOK?

THE MICRO CADAM MENU STRUCTURE:

There are four types of MICRO CADAM menus:

·	Primary menu	Appears when you first activate a function
·	Secondary menu	Appears when you select a primary menu option.
·	Submenu	Appears when you select a secondary menu option.
·	Modifier Menu	Can appear with any other menu. It is used to provide a variation of an option.

To simplify the use of this book, all four types of menus are called submenus.

THE BOOK STRUCTURE:

The book is composed of chapters. Most chapters are divided into the following parts:

1. Chapter Title

2. Menu Item Tree (see example at the right). This tree provides a reference chart for menu items and shows where they are found in the menu tree.

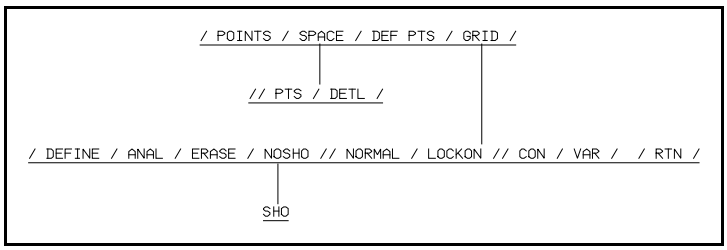

3. Concepts and a general introduction

4. Menu Item Tree detailed description.

5. Beginner and advanced sections.

Many of the chapters are divided into beginner and advanced sections.

If you are a beginner it is recommended that you read only the beginner sections. Return and read the advanced sections later after you have grasped the basic concepts.

If you are an experienced CADAM user feel free to peruse the beginner sections for a quick review, but concentrate on the advanced sections.

PRACTICE DRAWINGS:

Most examples are intended to be used as stand-alone practice exercises (see the figure at the right). Please recreate the steps yourself and watch the result.

Sample drawings are included. They have geometry already drawn and are intended to be used for the practice exercises.

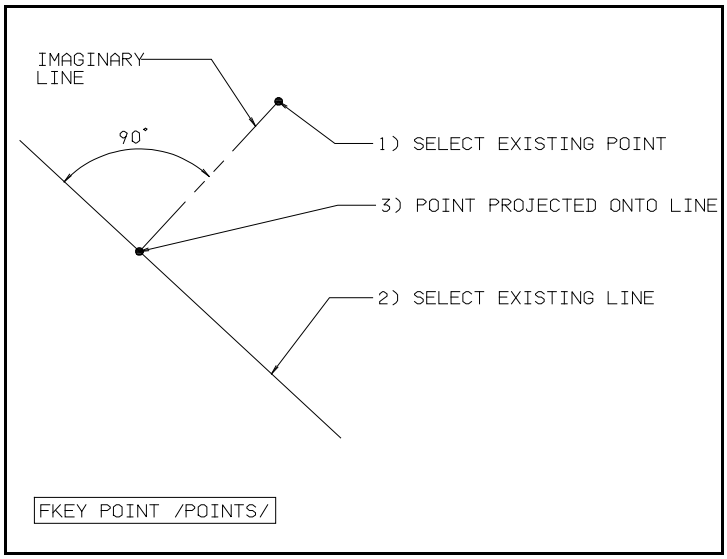

Sample practice drawings can be found in the group,user CAD,TRAIN. Simply call the appropriate drawing from the hard disk and you will have enough points, lines and circles to use in the exercises. The drawing names reflect the contents of the drawing. For example the drawing **ANGLE LINE EX,** in the group,user CAD,TRAIN contains the basic geometry as shown in the graphic at the right.

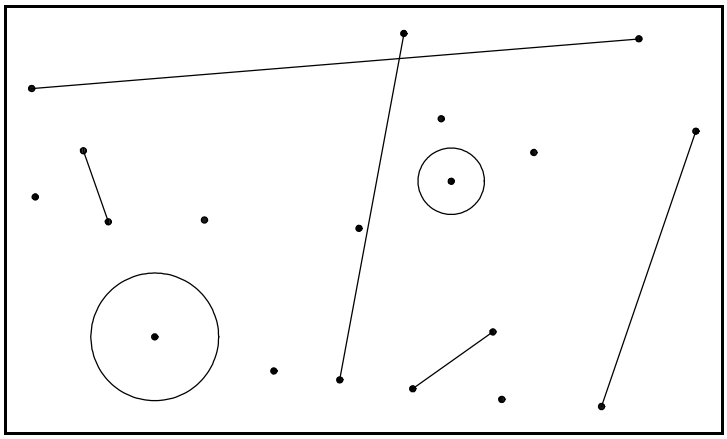

ROADMAPS:

Many chapters contain Roadmaps (see example at the right). Roadmaps provide a diagram showing the paths (or roads) that you must take to arrive at your destination. (This is just like being in your car on a trip...you would consult a roadmap to determine how to get from where you are to where you are going)

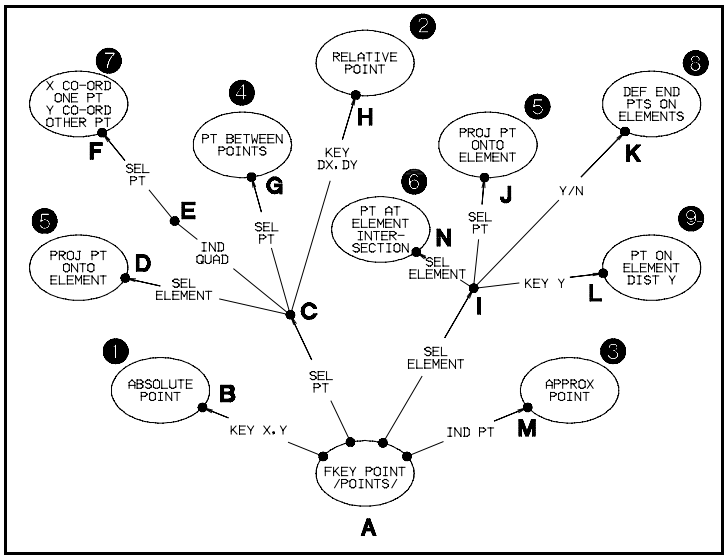

MICRO CADAM has an intelligent menu system and there are many different options. The Roadmap helps us to understand how the different options interrelate.

The Roadmaps in the beginner sections are simplified so as not to confuse the novice. Only partial Roadmaps are shown here. The Roadmaps in the advanced sections are complete and can sometimes be quite complex. Remember, you may never need to use all the options, but it is good to know that they are there.

NODES AND NODEPATHS:

Each Roadmap has nodes defined. (Refer to the diagram at the right). These nodes are labelled with the letters A-Z and AA-ZZ. Nodes are used in the descriptive text to reference a node path. For example, in the diagram at the right the node sequence A,C,E,F would create Point #7 (which is a point created by taking the X-coordinate of one point and the Y-coordinate of the other point)

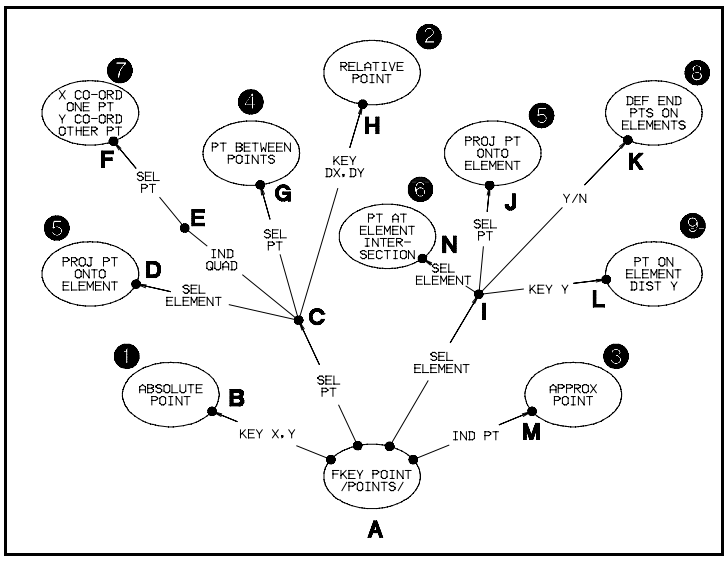

At the end of each node path is a white number in a black circle. This is the result achieved by following the

node path. These numbers are matched to the descriptive text. For example Point #7 in the diagram above would also be called Point number 7 in any charts that follow; thus the diagram is tied to the text.

DRAWING LOCATIONS:

Sample drawings are found in the following *group,user* locations:

- Standard Library drawings are in CAD,STDLIB
- Practice drawings are in CAD,TRAIN
- Quickstart drawings are in CAD,QSTART
- Demo drawings are in CAD,DEMO
- Starter format drawings are in CAD,FORMAT
- Sample symbol tables are found in SYS,SYMBOL

It is recommended that you start a new user for your own drawings. For example, if your name is fred, create a group,user called CAD,FRED and keep all your drawings there. See FKey FILE in Chapter 8 for instructions on creating a group and user.

CHAPTER RECOMMENDATIONS FOR THE BEGINNER:

It is recommended that beginners and people new to MICRO CADAM read the chapters in the following order:

1. INSTALLATION AND SETUP (in order to install the software and setup your system)

2. HOW DO I USE THIS BOOK? (This chapter...how to get the most out of your book)

3. INTRODUCTION (a quick perspective on the book)

4. OVERVIEW (a general introduction to, and overview of MICRO CADAM)

5. CADAM BACKGROUND (a chronological history of CADAM)

6. CONCEPTS (basic MICRO CADAM concepts...very important)

7. QUICKSTART (Let’s jump right in and draw!...)

8. FKey FILE (Includes instructions on calling up demo drawings).

9. Appendix A (Take a look at both production and demo MICRO CADAM drawings).

10. Read the Beginner sections in all the other Chapters.

11. Everything else!

CHAPTER RECOMMENDATIONS FOR THE EXPERIENCED CADAM USER:

It is recommended that experienced CADAM users read through the beginner sections for a quick review, and then proceed through the advanced sections.

Experienced users will find **HINTS, TIPS AND SUGGESTIONS** in Chapter 33 useful. They will also find the information on the Commercial Versions of MICRO CADAM in Chapter 32 very interesting. (There is a growth path available should you need it).

CHAPTER 3

INTRODUCTION

WHY A BOOK ABOUT MICRO CADAM?

This book was written for the following two reasons:

- To provide a reference guide for the experienced CADAM user. Advanced sections with comprehensive graphics, and the many hints and tips will increase the capability, speed and efficiency of existing users.

- To increase market awareness of MICRO CADAM and introduce it to the new user, whether they are experienced on another CAD package, or not. MICRO CADAM has a unique combination of being one of the easiest CAD packages to learn, and yet one of the most powerful.

WHO SHOULD USE THIS BOOK AND SOFTWARE?

This book should be used by any of the following:

- Designers, draftsmen and engineers: They will find this software works the way they used to work on the drafting board. It is intuitive, easy to use and powerful.

- Educational institutions: They will find the basic drafting and CAD concepts well laid out. MICRO CADAM is easy to learn and very powerful. Orthographic, isometric and true views are all covered...and the students may legally take copies of the software home with them after the course is finished and/or order their own copy of the book.

- Anyone that has always wanted to learn CAD software, but could never afford it.

- Anyone that has always wanted to learn CAD software, but their computer was not capable of running it. This FREE VERSION OF MICRO CADAM requires a 80286 processor (i.e. an AT class computer), an 80287 math coprocessor (a shareware math coprocessor emulator is included for 386 and 486 systems, to get you running should you not have a math coprocessor), 640K base memory (no

extended or expanded memory required), an EGA color monitor (VGA would be better, but the program will run on an EGA monitor), a mouse, and a 20 MB hard disk.

- Businesses that are not willing to spend a large amount of money on a CAD system to be more productive and efficient.
- Students that cannot afford standard commercial software and do not want illegal copies of other software.
- Existing CADAM users that are already proficient in the software, and want a copy of the CAD system to run at home.
- Anyone that has one job (e.g. a house or deck addition or landscaping) and don't want (or can't afford) to go out and buy a commercial package.

WHAT IS IN THIS BOOK:

This book is organized as both a reference and tutorial as follows:

1. Basic concepts and explanations for the new user.
2. A Quickstart tutorial for the beginner.
3. Advanced features and demonstrations for the experienced user.
4. Advanced tutorials for the advanced user.

CHAPTER 4 OVERVIEW

1. INTRODUCTION:

Both first-time PC CAD buyers and those looking to improve upon their current PC CAD systems should make their purchasing decisions with a firm understanding of what CAD should do in their business. They must consider the kinds of problems they want solved, the need to share data among groups or with customers and suppliers, and the role of CAD, not only as an engineering productivity tool, but also as a business tool.

The first test of any CAD system, is its ability to do real work and to solve drafting problems. But issues such as database management, communications, compatibility across disciplines and across many sizes of computers are also critical. In addition, issues such as customer support and maintenance policies may not seem relevant until a user is suddenly in trouble with a CAD system and needs assistance. Thus, it is important to ask up front about a CAD company's commitment to service, support, and software maintenance.

Other key questions about specific functional areas of a CAD system are:

- How does the system handle related sub-drawings and views of a part or assembly?
- Does the system allow me to continue to work and think in a manner similar to the way I'm accustomed to working?
- Are there capabilities that make my job as an engineer or designer easier?
- Is it easy to change and edit drawings I've already completed?
- Can I enter and edit text easily? Can I specify text parameters?
- Are the drawing management and filing capabilities easy to use and intuitive?

Beware of checklists. It is easy to accept the idea that software packages can be effectively compared using paper checklists with marketing buzz words and system-specific jargon. A large part of a CAD system is difficult to describe comprehensively.

Without actually using a system or seeing it in use, it is difficult to obtain an accurate and complete understanding of its capabilities and limitations.

On the other hand, a checklist can be useful if one has informed knowledge of the relative importance of particular features or capabilities. The weighting of a checklist item can be as important as whether the item is present or not.

Areas of analysis not easily subject to checklists include:

- Human-computer interaction (dialogue with the computer.)
- Perceived versus actual need for supported features.
- Details of actions required to invoke given functions (length, complexity, accessibility, etc.).
- Amount of data management imposed upon the user by the system.
- Level of concentration on the actual design/editing process permitted by the system (i.e. types of system distractions that require the user to focus on entering information rather than on design and editing processes).
- "Circular functions"--functions provided by the system whose need is generated only by inadequacies of the system itself.
- "Convenience functions"--simple methods for accomplishing given tasks, although more complex workarounds are also provided by the system (e.g. grouping by color).

2. USER'S ANALYSIS

a. FUNCTIONAL STRENGTHS OF MICRO CADAM

i. RELATED VIEWS

A major *functional* advantage of MICRO CADAM is the ability to create <u>mathematically related views</u> of a model, namely orthographic, auxiliary

and sectional views. Even today the basic key to manufacturing is classic orthographic projection. This is still the customary manner in which an engineer describes to a manufacturer the details of what needs to be built. In addition, the vast majority of engineering drawings incorporate many views of a part.

Less sophisticated systems may have documentation and advertisements that depict two or more views of an object positioned next to each other. However, each of the views illustrated is usually a separate drawing and completely independent from any others on the drawing page. In actuality, without related views such as those provided in MICRO CADAM, it would prove to be a major undertaking to draw the four standard views (plan, front elevation, side elevation, and isometric) of any but the simplest parts.

MICRO CADAM's AUX VIEW function and /ISO/ menu option offer a significant advantage to MICRO CADAM users. This capability is one of the most important reasons why production CAD users use MICRO CADAM as a serious engineering tool.

ii. SPLINES

Splines are mathematically accurate and easily defined "irregular" curves. True *splines* have special significance in engineering design. A spline is the mathematical equivalent of the shape that a flexible beam or rod will take when constrained at the given points (the defining points of the spline, with or without restricting end vectors). This curve can be proven to minimize the stress levels within a structure, given the point constraints. MICRO CADAM splines maintain second-order continuity, which is very important when designing very smooth cross-sections and surfaces.

Applications for splines extend throughout industry, but they are essential for automotive body design and aircraft work. A spline gives an intuitively "better-looking" curve fit to an object than does an arc-line curve, which are often mistaken for splines. Arc-line spline approximations have other disadvantages; mating parts or clearances to other parts can be inaccurate enough to be deceiving. Using MICRO CADAM, parallel spline elements can be defined in three steps--a feature that would not be practical using approximations.

iii. SUPPORT OF GROUPS

Placing model elements into temporary or permanent groups is an important capability of any CAD system. This allows the user to perform a given operation on all the elements within the group in a single step, rather than repeating the operation a number of times for each element. It is critical for a user to be able to both easily create and modify groups in order to facilitate model construction. Three distinct capabilities demonstrate MICRO CADAM's superior support of groups:

(1) Creation of a group using an arbitrary polygon. This feature allows the user to indicate the vertices of an arbitrary polygon to enclose the elements to be contained within a group. This is particularly valuable when other elements which are not desired in the group lie in close proximity to other elements. A simple rectangle may also be used to define a group.

(2) Modifying a group. This feature allows the group to be altered by either adding or subtracting elements. A group that is created using a rectangle or an arbitrary polygon often contains elements that are not desired in the group. This facility permits the easy addition or subtraction to a group, aiding the user in group definition.

(3) Sets (or permanent groups). It is often desirable to place elements into a permanent relationship with one another. This allows the user to obtain information regarding the elements within the set or to perform multiple operations on these elements without redefining the elements contained within the group for each individual operation.

iv. MORE EXTENSIVE DIMENSIONING CAPABILITIES

In virtually all production engineering drawings, dimensions are a critical component. The simplest parts may contain as few as a dozen dimensions, but a typical manufactured part contains scores of dimensions absolutely necessary for definition of the part. These dimensions are a vital communication link between designer and manufacturer. Without them many parts could not be fabricated.

MICRO CADAM provides several methods for *automatically* dimensioning

elements that are not available in other systems. The most significant ones include:

- /NORM/ -- Allows the user to dimension the normal distance between two elements.

- /CURV/ -- Allows the user to dimension the curved length of any curved element.

- /CHAM/ -- Allows the user to dimension chamfered corners.

MICRO CADAM allows the user to create a dimension by selecting any appropriate geometric element, not just points. MICRO CADAM also allows the user to redefine the location of the dimension at any time during the creation of the dimension, and allows many options for the placement of dimension text. A few examples:

- The user can define the horizontal as well as the vertical placement of the dimension for either horizontal or vertical linear dimensions.

- The user can indicate any location for diameter or radius dimensions, independent of the selection of the circle or arc.

In some other systems, a dimension is not an entity, but rather a collection of standard geometric and text elements: typically two lines for the extension lines, two more lines for the dimension lines, two solids for the arrows (a solid is a four sided, area-filled polygon), and text for the dimension. Once created, <u>these elements have no relationship to each other.</u> On the other hand, MICRO CADAM treats a dimension as a single entity for such functions as moving, erasing and editing. This saves time, because you don't have to select elements one by one to change a dimension.

In addition to position editing, MICRO CADAM possesses important dimension-editing tools. The user is permitted to change the text, add a leader, change the dimension lines, change the extension lines, etc. Dimensions in MICRO CADAM are associative (i.e. they are attached to the actual geometry). A designer or draftsman needs to be able to quickly and easily modify dimensions in order to effectively document design alterations. Without the ability to perform special editing operations on dimensions, laborious workarounds are needed, or the affected areas of the

drawing must be completely redimensioned.

MICRO CADAM also offers the functions /ERS DIM/ and /NO SHO DIM/, which allow all dimensions in a model to be erased or"no-shown" (temporarily hidden, but not removed from the model). This ability to conceal or erase all dimensions, either temporarily or permanently, is very important. An extensive set of dimensions can obscure the object being drawn. In addition, in technical illustration and general conceptual design work, it may be desirable *not* to display the dimensions on the drawing.

v. ELLIPSES AND OTHER TRUE CONICS

Generating *any* complex curves with mathematical accuracy requires a CAD system that offers curve types beyond the simple circular arc. As with splines, MICRO CADAM conics are very valuable curves. They are commonly used for aircraft design work. Using conics, a designer can easily and accurately define smooth, cross-sectional curves of aerodynamic surfaces. The ability to easily create conics and modify them during their construction (by selecting a tangent line, a shoulder point, or keying in a ratio) provides the designer with great flexibility. This allows significant control over the behaviour of the curve, ensuring the cross section is designed properly, and adequate clearance for any internal features (frames, struts, etc.) is provided. Using conics, the designer can ensure smooth, complex curves which maintain first order continuity of slope at their intersections.

The ellipse is a member of the important family of curves called conic sections. Conic sections also include the circle, parabola, and hyperbola. Ellipses occur in nature, such as in the orbits of natural satellites. Ellipses are common drafting elements found in many engineering drawings, especially those that contain non-axial views of holes and cylinders. A strong advantage of MICRO CADAM is that it creates true ellipses, not ellipses approximated by arc segments.

Some PC CAD systems use as many as sixteen arc segments to define an ellipse, and the ellipse is stored in the model as a concatenation of arcs. The MICRO CADAM system stores the ellipse as a single entity. This allows a true representation and analysis of the geometry. MICRO CADAM also accurately interprets a circle as an ellipse when viewed in an isometric drawing.

vi. FLEXIBLE LINE CREATION

MICRO CADAM allows the user flexibility in the creation of lines. In engineering design, the line is a real workhorse. A CAD system designed as an engineering tool should incorporate a variety of methods for drawing lines. Three methods are common to many CAD systems:

- Define a starting point and an ending point (Cartesian coordinates).
- Define a starting point and a relative distance (Cartesian coordinates).
- Define a starting point, a length, and an angle relative to the horizontal (polar coordinates).

MICRO CADAM offers several additional techniques virtually essential for the convenient construction of lines. Some of these, which are fundamental to MICRO CADAM are:

- Creating an "unlimited" length line.
- Creating a line that is parallel to another element.
- Creating a line that is normal to another element at a given point on that element.
- Creating a line that is tangent to another element at a given point on that element.
- Creating a line at a given angle from **any** other line.

The items mentioned above (particularly the last one) are critical functions which should be contained in any CAD system designed for use by draftsmen and engineers. MICRO CADAM also provides similar abilities for the development of circles and other elements.

vii. USER FRIENDLY RELIMITING

Relimiting is the ability to alter an element’s length, typically by having it lengthened or shortened so it meets precisely with another element. Relimiting is a fundamental CAD procedure.

MICRO CADAM's RELIMIT function allows the user to lengthen or shorten an element at will, using the same function and even the same menu option. This is one of the reasons MICRO CADAM's versatile RELIMIT function has proven to be a powerful editing tool. Additional advantages of the MICRO CADAM RELIMIT function are as follows:

- It is possible to extend or trim an element to a point or "node", as well as a line, circle, or arc.
- A "break around" function is supported for relimiting an element around another element.
- A "break inside" function is supported for relimiting an element within another element.
- The user has the ability to "close" an element (regenerate an element that has been broken or relimited).

viii. **SIGNIFICANT CORNERING CAPABILITY**

Most manufactured parts have few, if any hard corners. Corners and edges are often rounded intentionally to reduce stress concentration that can lead to premature product failure, and for safety and cosmetic purposes. In addition, many parts must have rounded corners and edges out of manufacturing necessity, especially in the fields of casting and injection molding.

The ability to automatically create a corner of a given radius (including a radius of zero) between two elements is a powerful tool for any CAD system. It automates the task of placing a circular arc tangent to two other elements and then relimiting those elements to that arc.

A significant advantage of MICRO CADAM is the ability to specify the quadrant (formed by the intersection of the elements or the linear extension of the elements) in which to create the corner, rather than arbitrarily assuming the direction the user intended.

MICRO CADAM's cornering capability also includes the following enhancements:

- /TRIM #1/ option--trim only one element, the first one selected
- /TRIM #2/ option--trim only one element, the second one selected
- /NO TRIM/ option--insert a fillet
- /CONCAVE/ option--create a concave corner radius
- /PIGTAIL/ option--create a path for optical trace following routers

ix. **SYMBOLS**

Symbols are integral elements in most engineering drawings. The ability to place a commonly used collection of elements quickly and easily at a specified location on a drawing is a requirement for virtually all types of drawings, including mechanical, electrical or architectural.

In addition to offering many built-in geometric symbols, MICRO CADAM allows the easy creation and use of the following as symbols:

- Arrows with text
- Balloons with text
- Deltas with text
- Section arrows
- Text-lines

MICRO CADAM also offers special symbol editing capabilities, including:

- Scaling
- Rotating
- Axis flipping

x. **ABILITY TO ROTATE THE WINDOW**

Without the ability to rotate the window, the user is limited to panning and zooming. It is not uncommon for a part to be designed with a number of detailed areas with a non-horizontal orientation. The ability to turn the window, possibly combined with the capability of defining a secondary origin greatly assists the user in both the defining and editing of model elements. Without this capability, the user is required to work at an awkward orientation, quite possibly tilting his head to gain a better

perspective on the work area.

xi. **MULTIPLE USER-SELECTED ORIGINS**

It is often helpful (especially with large and/or complex drawings) to place one or more additional reference origins at critical points in the drawing, possibly with a special orientation. This allows the user to work from a much more convenient axis block instead of having to reference every drawing element from the true origin (0,0) point or from some other previously-defined drawing element. In addition, it is possible to construct multiple views of a part at multiple scales using multiple origins. This allows display of a part detail in the same view at a different scale from the primary view of the drawing; a number of auxiliary origins, each with a different scale, can coexist in the same view. Multiple origins also allow the user to combine a sub-assembly in metric units with an assembly in English units and then to dimension everything in either or both systems. Multiple origins are also useful for datum dimensions. By defining a new origin, it is possible to use the origin point as a reference for datum dimensions.

xii. **TEXT EDITING**

Most drawings contain text displayed in conjunction with the geometry. The ability to generate and modify text should be supported by any productive CAD system. The purposes for generating this textual information is varied. Text helps identify elements in the drawing and often includes manufacturing or assembling information. Descriptive information pertaining to the drawing as a whole, as well as to the designing firm, is a requirement for virtually all production drawings. MICRO CADAM refers to these elements as notes. The editing capabilities provided by MICRO CADAM are both powerful and diverse, including:

- Text editing
- Moving
- Sizing
- Altering the angle
- Justifying
- Fitting

Without these editing functions, the user may be forced to erase the note

and recreate it as desired.

MICRO CADAM can also temporarily hide (no-show) the display of notes in a drawing.

xiii. OPERATIONS BY COLOR OR LINE TYPE

MICRO CADAM supports a number of functions that perform operations on model elements that share specified characteristics. Several of these have been discussed in earlier sections of this introduction (erasing/no-showing dimensions, showing symbols, and no-showing text). However, several operations for elements of the same color and line type are also important. These include:

- Grouping by color
- Showing elements of the same color
- Showing elements of the same line type

For example a user may wish to change all the elements of one color to another color (for example, convert all of the blue elements to green). This is a simple task to accomplish with MICRO CADAM. In addition, it is often desirable to display only elements of a particular color or line type for verification purposes, especially when preparing a drawing for plotting. By quickly viewing only the elements of interest, the user can assure that the model is correctly drawn and ensure that it will be plotted accurately. This also allows users to utilize colors as "layers" of a drawing or to distinguish changes from previous work on a drawing.

xiv. POWERFUL DISPLAY FEATURES

It is frequently desirable to *temporarily* remove particular elements (both geometric and non-geometric) from the display. By concealing desired elements within the model, the user is able to focus attention on a particular area of the screen. Several specific applications of this capability have been discussed in previous sections of this introduction (dimensions, notes, elements with the same color/line type).

In addition to being able to "show" and "no-show" model elements, MICRO CADAM allows for quick and easy erasure of all of the points or "nodes" which have been created in the model. Since points are typically used as model construction aids, it is often desirable to remove them as they become unnecessary. This allows the user to "clean up" the drawing and frees valuable model space. MICRO CADAM's /ERS PTS/ menu option allows the user to immediately erase all of the points in the current view with only three operations.

xv. **RELATIVE ANALYSIS**

It is often useful to obtain relative data regarding two elements, particularly the angle between two lines or the distance between two elements. The ability to quickly and easily obtain this information is an important feature of any engineering-oriented CAD system. MICRO CADAM's /REL/ menu option provides this capability.

b. **USER INTERFACE STRENGTHS**

CADAM was originally developed at Lockheed for internal use by its own designers, engineers and draftsmen. Those same people were responsible for defining the user interface for the CADAM system. They insisted that system developers retain the flexibility of the drawing board with the precision and productivity of a computer system. This challenge led to CADAM's unique and easy to use interface. the MICRO CADAM user interface evolved from that first effort. Over the years, system developers have taken advantage of innovative and user-friendly hardware options and have paid attention to user's comments regarding the system. The result is a user-friendly MICRO CADAM system that is consistent with mainframe CADAM and PROFESSIONAL CADAM on engineering workstations.

Research on interfaces has demonstrated that no single type of interface is favoured among CAD users as a group. However, users do show a marked preference for well-structured, logical, and functionally consistent interfaces. The MICRO CADAM system has combined a logical menu structure (that can be represented by a logical decision tree), clear English language prompts and system responses, and a three-button mouse (or tablet). Input from the alphanumeric keyboard is minimal.

i. INPUT DEVICES FOR QUICK RESPONSE

The most productive configuration for Micro CADAM uses three devices for input to the system: a function key box, the alphanumeric keyboard, and a 3-button optical mouse. The function key box allows the user to quickly select any major function of the system. The function keybox is a time-tested device that allows a user to enter a function with the non-dominant hand. Thus, a right handed user who is operating the mouse can quickly use the left hand to change to a new function. In addition, many users quickly learn to use the function key box "by touch", just as they would use a ten-key pad on a calculator. In addition, more drawing area is made available on the screen because a functional menu does not have to share the display area. The alphanumeric keyboard is used primarily for annotation and to input number values with the ten-key pad. The mouse is used for selecting menu options and drawing elements on the graphics display. In addition, two system functions--INDICATE and YES/NO -- in addition to SELECT are implemented on the mouse. (The INDICATE function allows the user to approximate a location on the drawing. The YES/NO function is used to confirm default values, cancel operations, or repeat options, as well as other uses.) The MICRO CADAM user is not required to memorize and key-in commands--a laborious and time-consuming process that requires accurate typing. Some PC CAD systems unrealistically expect the draftsman to be a proficient typist; this is not true of the MICRO CADAM system, because user skills and expectations were taken into account in designing the system. The implementation of input devices for MICRO CADAM places a large portion of the system function under the user’s fingertips.

PC CAD systems with overly complex and unclear menu structures frequently employ a digitizer tablet with template to spread the options out in front of the user. At first glance, this may appear to be a useful approach. However, the user may spend time trying to locate and read the fine print on a template and can become fatigued reaching across a large tablet to select frequently used options.

ii. USER-FRIENDLY MENU STRUCTURE

MICRO CADAM uses an on-screen menu system. When a function is selected, the system displays all of the allowable menu options at the bottom of the screen. Each menu option is accompanied by a system prompt that tells the user what the allowable input and actions are from

that option. In most cases, the user can complete the desired operation from the primary menu option. Rarely does the system require the user to delve more than two layers deep into a menu. In addition, the user can exit from any function at any time.

Other PC CAD systems may require the user to deal with multi-level, complex menu structures. Menus may have several entry points. Others cluster their options into two or more groups, and the steps required to move from one function to another unrelated one can be unclear, unless the user goes back to the primary menu and works down again in a different direction. It is not unusual for a user to move up and down through the various menu levels, resurfacing at the primary menu level to reorient himself and then move down again. In addition, the system may display menu options that are not available to the user at the current level.

iii. AUTOMATIC REPETITION OF OPERATIONS

Creating a complex drawing often requires certain operations to be repeated. Command driver systems typically require the user to reselect a function or menu option to repeat an operation. This can be time-consuming and annoying.

MICRO CADAM's unique YES/NO function allows the user to repeat an action by pressing a single button on the mouse. In addition, after an operation is completed, the system automatically restarts the sequence until the user interrupts the cycle by selecting another menu option or by pressing a function key.

iv. ABILITY TO WINDOW DURING AN OPERATION

A CAD user frequently finds it necessary to alter the drawing window (or viewport) to construct or modify a model. This is an especially important function when the user is working with small PC graphic monitors. MICRO CADAM's WINDOW function allows the user to zoom in and out on specific areas of a drawing. This allows him to use a small monitor to draw very large and complex drawings. In addition, the MICRO CADAM user can change window size or orientation in the middle of another task and resume the task at the point where it was left. Also, the MICRO CADAM system "remembers" up to seven window positions that can easily be recalled.

Other PC CAD systems may lock a user into a task or sequence of tasks until all the steps are completed. Thus, the user must complete or abort the operation before the drawing window can be modified.

v. **EASY TO USE DRAWING FILE MANAGEMENT**

MICRO CADAM makes it easy to access, delete, copy, and rename drawing files that have already been created, even if the user has forgotten the name (or the spelling) of the model.

To access a drawing in MICRO CADAM, you simply:

1) Key in a group,user which contains the drawing file of interest.

2) Since the /CALL/ menu option (which initiates the calling sequence) is the default, press the Y/N function key to obtain a complete listing of your files. View the list and determine the name of the file in which you are interested.

3) Select the name of the file you wish to call.

This requires significantly fewer steps than many other PC CAD systems. Similarly, deleting, copying, and renaming files are simple, straightforward procedures in MICRO CADAM. Easy manipulation of the drawing file data base is an important productivity tool not found on many PC CAD systems. Long filenames make it easy to recognize drawings.

vi. **"INTELLIGENCE"**

MICRO CADAM interacts *intelligently* with the user. This is evident in the way in which the computer carries on a dialogue with the user. Most CAD systems require the user to prepare the system for the exact form and sequence of the data to be put into the system.

The MICRO CADAM user is typically permitted to enter information into the system without explicitly informing the program of the exact nature of the data. The software analyzes the information and "decides" on its own the precise significance of the data. That is, the MICRO CADAM user can communicate with the system on a more natural level, providing it with detailed information and allowing the software to interpret it.

In some other systems, the computer must be informed *in advance* of the precise method being used to define entries (such as the several ways to define a circle). MICRO CADAM, on the other hand, anticipates the user's actions whenever possible, frequently permitting data to be entered with little or no "prefacing remarks". The user is able to work with the software, allowing it to make as many "decisions" as is practical. Thus, MICRO CADAM attempts to incorporate many features of human-human dialogue into its human-computer interface.

vii. SINGLE-SCREEN INTERFACE

MICRO CADAM has been designed to effectively use a single screen; no additional monitor is necessary. All of the information which a user needs or requests is displayed around the perimeter of the graphics screen. This allows the user to more easily relate the data supplied by the computer to the drawing and permits uninterrupted concentration on the task at hand.

Some PC CAD systems are designed to be used most effectively with two monitors. One screen is the graphics area, with the menus located down the right-hand side and several lines at the bottom to serve as a combination message area and command line. The second screen contains most of the user/computer dialogue, analytical data requested by the user, and other information which is too bulky to fit conveniently in the graphics area (such as user HELP listings).

However, requiring the use of two monitors is a bulky, ineffective design for a CAD system designed for a micro computer, and can be costly. When a system combines two screens into a single monitor, using a PF key as a "toggle" between them while internally keeping track of both, the user must flip back and forth to view the graphics area or to set up command sequences.

viii. EASY POINTS CREATION AND SELECTION

Points are the basic building blocks for other geometric elements. A user often needs a visible marker at a significant location on the screen that can be referred to repeatedly within a drawing session. By placing point elements on the graphic screen, the user can accentuate areas of interest. The exact location of interest can be seen without any approximation. (For example, the midpoint of a line or the center of a circle can be easily

designated.) It is essential that a CAD system allow easy generation and use of points.

MICRO CADAM points are simple to create and reference. Once a MICRO CADAM point has been defined, it becomes a visible part of the model and remains until it is erased or no-shown. A single operation allows the user to create a point.

Although virtually all other elements (arcs, circles, ellipses, lines, splines, etc.) include within their definition one or more points, other PC CAD systems do not allow these points to be referenced by selecting them with a pointing device.

ix. COLOR HIGHLIGHTING

Most CAD systems support some type of element highlighting. This important feature is used to single out the element(s) detected by the system. It is therefore vital that a CAD system support a highlighting capability that dramatically alters an element's physical appearance while preserving its integrity.

Many MICRO CADAM operations (such as grouping, analyzing, editing, etc.) use highlighting to identify model element(s) on which the system is currently operating. This tells the user that the element(s) picked have indeed been selected and allows him to continue the process in progress or alter it as required.

MICRO CADAM alters an element's color to accomplish this task. Thus, while the element's appearance changes, it maintains its geometric integrity. In addition, MICRO CADAM supports a user-selectable highlight color.

x. EASY COLOR ASSIGNMENT AND MODIFICATION

Color support is invaluable for today's state-of-the-art CAD systems. The ability to quickly assign and modify the colors of model elements is desired by many CAD users. MICRO CADAM's "side" color display provides a superior method for assigning and modifying element colors from within a work session. The user has a large pallet of colors from which to choose, and changing the color of an element (or setting the color mode) requires a few simple operations. The user can visually examine

a hue before assigning it to a model element without the use of the keyboard.

Some PC CAD systems allow the user to assign colors from a color pallet, but from outside a work session. Thus, the user may have to remember color numbers or leave a session to check or modify color assignments.

xi. **QUICK, EASY SCREEN REFRESH**

Most PC CAD systems require the user to refresh the screen occasionally in order to "clear up" the drawing. This "housekeeping" operation should be easily accessible and quickly executable.

Since refreshing the screen requires excessive CPU time, most PC CAD systems do not automatically refresh the screen after each operation (except for certain functions, such as windowing). However, this task needs to be performed following extensive editing of the model elements. MICRO CADAM provides an extremely convenient method for accomplishing this task: a programmed function key (PFK3) has been allocated for the purpose of refreshing the screen. This key is always accessible and can be pressed at any time during the modelling session without interrupting the current operation.

xii. **ACCEPTS MATHEMATICAL EXPRESSION ENTRIES**

MICRO CADAM allows the direct entry of mathematical expressions to help define geometry. It is often convenient to use mathematical expressions to define a numerical value. This eliminates the need to manually solve an equation (using pencil and paper or calculator) and then key in the solution.

There are many applications for this feature. The placement of model elements at specific locations in a drawing typically requires the user to reference existing elements. The user frequently finds that he must generate a simple mathematical expression relative to the present geometry and to the element(s) he desires to create. Sometimes these calculations are too complex to perform mentally. If the CAD system permits him to enter an expression, it can be of significant assistance any time the user is required to add, subtract, multiply, and/or divide in order to arrive at a single value.

c. COMPATIBILITY WITH OTHER SYSTEMS

There are many approaches to the problem of compatibility with other CAD systems. It is difficult to write programs that not only translate the elements of a model in one system to the format of another, but also retain the intelligence and unique features built in to the model. This is one reason that translation software based on the IGES standard has generally been unsuccessful. Because there is rarely, it ever, a one-to-one correspondence between the features and functions of two different CAD systems, something is invariably lost in translation.

ALTIUM INC. (formerly CADAM INC.) has approached the problem of translating drawing models from one system to another in three ways:

i. The Data Transfer Option allows drawings to be downloaded from mainframe CADAM to MICRO CADAM and uploaded from MICRO CADAM to mainframe CADAM. This allows the user to move drawings created on MICRO CADAM to mainframe CADAM or PROFESSIONAL CADAM, and to take advantage of additional functions and applications packages.

ii. Users and third-party software vendors have a window into the MICRO CADAM database through the Geometry Interface Option. Geometry Interface allows you to write FORTRAN programs that can access the MICRO CADAM database--geometric and nongeometric entities can be edited, extracted from, or added to a MICRO CADAM drawing file.

iii. The DXF translator allows drawings from competing CAD systems to be brought into MICRO CADAM, and drawings from MICRO CADAM can be sent to other CAD systems.

d. CUSTOMER SUPPORT AND SOFTWARE MAINTENANCE

Some low-priced PC CAD vendors sell their software on an "as is" basis. That is, the product the customer receives is not subject to maintenance updates or bug fixes and, normally, the software vendor is not available for consultation on installation and use of the product. There is a trade-off between price and functional integrity, reliability, and ease of use.

ALTIUM INC. (formerly CADAM INC.) strongly believes that a customer is entitled to a reliable product that is easy to use. They are committed to the constant improvement of the MICRO CADAM software, including functional

enhancements and improvement of any functional deficiencies. The commercial version of MICRO CADAM continues to be enhanced.

3. CONCLUSIONS

Setting aside MICRO CADAM's ability to link directly with other members of the CADAM family, MICRO CADAM's pure engineering advantages over other PC CAD systems can be summarized as follows:

MICRO CADAM has:

- Superior capabilities for relating subdrawings and for viewing the part
- More types of elements meaningful to engineers
- More ways to create elements
- Quick and easy editing of graphic elements
- Complete and flexible text facilities
- Superior dimensioning capabilities
- More direct access to points
- User-friendly data management facilities

A significant advantage of MICRO CADAM is that it is fully compatible with mainframe CADAM. This is very important to current mainframe CADAM users, to those companies large enough to be planning the acquisition of a mainframe system or UNIX workstation in the future, and to those who have direct dealings with contractors and vendors who use CADAM. MICRO CADAM is also a productive tool for smaller design and manufacturing shops that perform a myriad of technically creative tasks.

Before purchasing a CAD system, it is a good idea to actually sit down and work with the system. A "canned" demonstration can be misleading. The bottom line advantage of MICRO CADAM is "more drawings per hour".

The CADAM family of products offers a compatible set of CAD/CAM tools across many

industries and disciplines, supported on machines ranging from the single-user PC/AT to the RS6000 to the 200-plus user IBM 3090 mainframe.

Overall, MICRO CADAM is a superior engineering tool, and its use will incur productivity gains for the user. The tremendous amount of CAD/CAM experience which has been incorporated into MICRO CADAM is readily evident upon working with the system. Years of dealing with demanding users have fine-tuned the product into a powerful and productive software package with proven reliability. A careful review of the functional capabilities of other PC CAD systems will convince a prospective purchaser that MICRO CADAM is the best system on the market today.

CHAPTER 5

CADAM BACKGROUND

CHRONOLOGICAL HISTORY:

- 1964 Joint Computer Conference: IBM announced graphics hardware and graphics concept. Lockheed-California Task Force established

  CADAM had its beginnings in 1964 when Lockheed-California Company established a task force to investigate the possibility of utilizing graphics hardware and the graphics concept that IBM had recently announced at a Joint Computer Conference. The result of the Lockheed Task Force was the successful production of the Lockheed L1011 airplane.

- 1965 Graphic development plan launched

- 1966 First operational graphics terminal

- 1978 IBM Marketing Agreement

  In 1978, CADAM signed a marketing agreement with IBM. Under this agreement, CADAM produced CAD/CAM software and IBM handled sales and marketing of these products.

- 1979 IBM installs CADAM for all internal IBM CAD requirements

- 1980 100 CADAM installations

- 1981 200 CADAM installations

- 1982 CADAM INC formation
  445 CADAM installations
  207 employees

  In 1982, CADAM INC. was incorporated as a wholly owned subsidiary of the Lockheed Corporation. At this time there were over 445 mainframe installations of CADAM software worldwide.

- 1983 685+ CADAM installations
  291 employees

- 1984 CADAM Services Company formation
  1000+ CADAM installations
  363 employees

  In 1984, the CADAM Systems Company Inc. was formed in Japan in a joint partnership with Kawasaki Heavy Industries, Ltd. CADAM Systems Company or "CSC" was formed to address the specific needs of the Japanese marketplace. Their first product, released in October 1985, was CSC MICRO CADAM for the IBM 5550 microcomputer.

- 1985 Synthavision acquisition
  CADAM European offices opened
  CADAM Southeast Asian office opened
  MICRO CADAM introduced in Japan
  1500+ CADAM installations

  In 1985, CADAM INC acquired Synthavision, a New York-based company with expertise in solid modelling. The mainframe CADAM ISD and PROFESSIONAL CADAM ISD products are outgrowths of the Synthavision acquisition.

- 1986 2000+ CADAM installations
  MICRO CADAM introduced worldwide
  PROFESSIONAL CADAM™ introduced

- 1987 MICRO CADAM CORNERSTONE introduced
  4000+ MICRO CADAM units sold
  GM/EDS selects CADAM as strategic partner

  After a fierce competition among the leading CAD/CAM vendors in 1987, CADAM INC. was chosen by General Motors as their strategic partner for the GM C4 program. The C4 strategy is aimed at integrating and consolidating the vast GM CAD/CAM resources. A recent outgrowth of this strategy was the selection of MICRO CADAM by General Motors as the PC CAD package of choice. MICRO CADAM joins PROFESSIONAL CADAM as the software solution for the C-4 program currently underway at General Motors.

- 1989 Personal CAD acquisition

  In March 1989, CADAM acquired Personal CAD, who produce the P-CAD product line.

- 1990 CADAM, an IBM Company

  CADAM was acquired by IBM from the Lockheed Corporation in January 1990, making CADAM an IBM Company.

- 1991 IBM, Dassault Systemes and CADAM INC announce agreement to restructure. MAINFRAME CADAM and PROFESSIONAL CADAM to be under common management with Dassault Systemes. CADAM INC retains MICRO CADAM, P-CAD and IBM CAD.

  Unix version of MICRO CADAM announced

- 1993 CADAM INC. changes name to ALTIUM INC.

CADAM TODAY:

There are four different commercial versions of CADAM today:

- MICRO CADAM CORNERSTONE
- MICRO CADAM PLUS
- PROFESSIONAL CADAM
- MAINFRAME CADAM

MAINFRAME CADAM is available on mainframe computers with VM/VMS and MVS/TSO operating systems.

PROFESSIONAL CADAM is available on IBM's RS6000 AIX (i.e. UNIX) workstations.

MICRO CADAM is available on both DOS and UNIX systems.

A comparison between the MICRO CADAM CORNERSTONE FREE software included with this book, and the MICRO CADAM PLUS commercial version follows:

A COMPARISON BETWEEN THE MICRO CADAM FREE SOFTWARE (included with this book) and the MICRO CADAM PLUS COMMERCIAL VERSION (available for purchase from your MICRO CADAM reseller)

ITEM	MICRO CADAM CORNERSTONE FREE SOFTWARE	MICRO CADAM PLUS R14
1	16,000 word model size (approx. 110,000 bytes)	384,000 word model size (approx 2.64 MB)
2	No overlay capability	200 models may be overlayed into one parent model (approx 528 MB model size)
3	No areafill capability. Cross hatched dittos must be used.	Area fill capability (as well as cross hatched dittos).
4	640K RAM base memory required.	8 MB RAM required (includes 1 MB base memory).
5	Runs on DOS based systems (must be at least 80286 (i.e. AT class) computer)	Runs on DOS base systems (at least 386SX based computer) and on the following UNIX systems: IBM RS6000 SUN SPARC HP Apollo 9000 series 700 SILICON GRAPHICS IRIS
6	Binary compatible files between DOS and UNIX versions of MICRO CADAM (model size must not exceed 16,000 words). Upward compatibility guaranteed.	Binary compatible between DOS and UNIX systems.
7	Requires math coprocessor (or use math coprocessor software emulator for 386 and 486 systems)	Requires math coprocessor on DOS based systems (or use math coprocessor software emulator for 386 and 486 systems).

NOTE1: The commercial version of MICRO CADAM CORNERSTONE is a greatly enhanced version of the FREE SOFTWARE included with this book.

NOTE2: For a detailed listing of enhancements provided by the commercial version of MICRO CADAM PLUS, please see "THE COMMERCIAL VERSIONS OF MICRO CADAM" in Chapter 32.

WHY FREE SOFTWARE?

ALTIUM INC. has decided to release a free version of MICRO CADAM CORNERSTONE software to increase market awareness of the MICRO CADAM product, and to inform users about MICRO CADAM applications, benefits and advantages.

The free software included with this book is not copy protected (you are encouraged to copy and freely distribute this software to friends, acquaintances and business associates), it is **NOT** crippled in way (full file saving and printing/plotting), and there are no restrictions on use (you can use it anywhere to do anything). ALTIUM INC. does retain ownership of the software.

The free software was current around 1988/1989 and at that time sold for approximately US $2,995.00. Because the user interface is the same on all three levels of CADAM, there is no retraining for existing users of the Mainframe CADAM or PROFESSIONAL CADAM. Drawings may be transferred between the three levels of CADAM using the MICRO CADAM DATA TRANSFER product.

CHAPTER 6

CONCEPTS

What is MICRO CADAM?

MICRO CADAM is a computer aided electronic design and drafting program. It was originally developed at Lockheed (U2, Lockheed L1011, SR71 Blackbird, etc.) in the early 1960's. Back then the draftsman and engineers wrote the specification for the programmers so that they would make the program work the same way they worked on their drafting boards. That is why MICRO CADAM has a drafting and engineering interface. If you are a draftsman or engineer it works the way you do; it will be a comfortable fit.

Electronic Drawing Area:

MICRO CADAM has an electronic drawing area of 20,000 units by 20,000 units. A unit can be any of the following:

- inch
- Ft
- mm
- cm
- metre
- km
- user defined units

For example, if the units are inches, the drawing area would be 20,000" x 20,000". It is possible to draw outside the 20,000 x 20,000 unit drawing area, but the accuracy will be reduced.

At the centre of this 20,000 x 20,000 unit drawing area is the origin The origin has an X,Y co-ordinate of 0,0. Points and other elements are entered with reference to this origin. The positive X direction is to the right and the negative X direction is to the left. The positive Y direction is up and the negative Y direction is down. See Figure 1 on page 6 - 2.

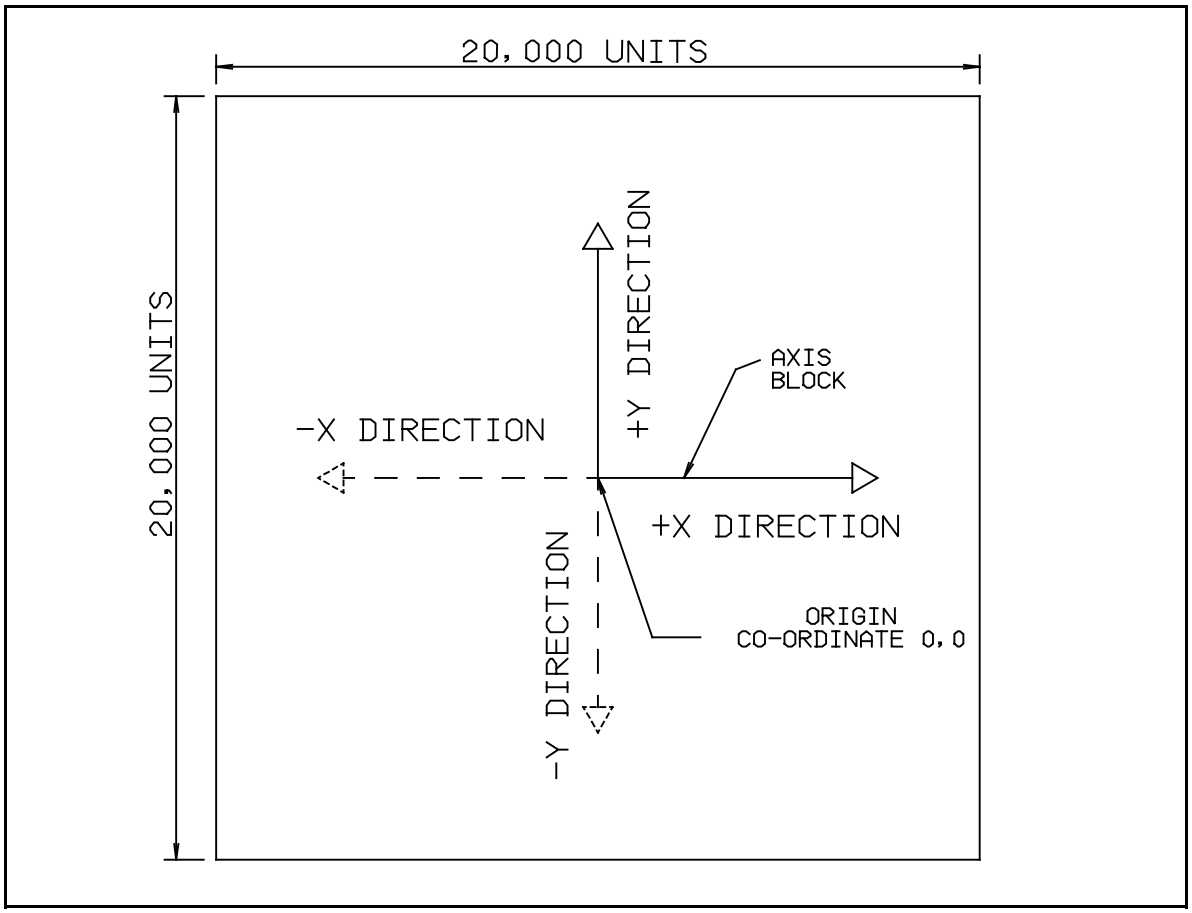

Figure 1 Electronic Drawing Area

Groups and Users:

MICRO CADAM stores drawings in Groups and Users. A Group is like a filing cabinet, a User is like a drawer in that filing cabinet and the CAD dwgs are like file folders in the User drawer (See Figure 2 on page 6 - 3). Many other CAD packages use the DOS file path structure to store their models and you must be familiar with this DOS file structure to store/recall models. MICRO CADAM uses DOS too, but it is used behind the scenes, it is transparent to the operator and requires no knowledge of DOS.

When the program is first started you are asked to key in the GROUP,USER (e.g. CAD,TRAIN). The program wants to know which filing cabinet (GROUP) and which drawer (USER) you want to work in. Your models (CAD drawings) are located in the USER drawer.

The GROUP name can have up to 4 characters and the USER name can have up to 6 characters. The comma between the GROUP and USER is significant. It is a separator and is always required. An example of a valid group,user is CAD,TRAIN.

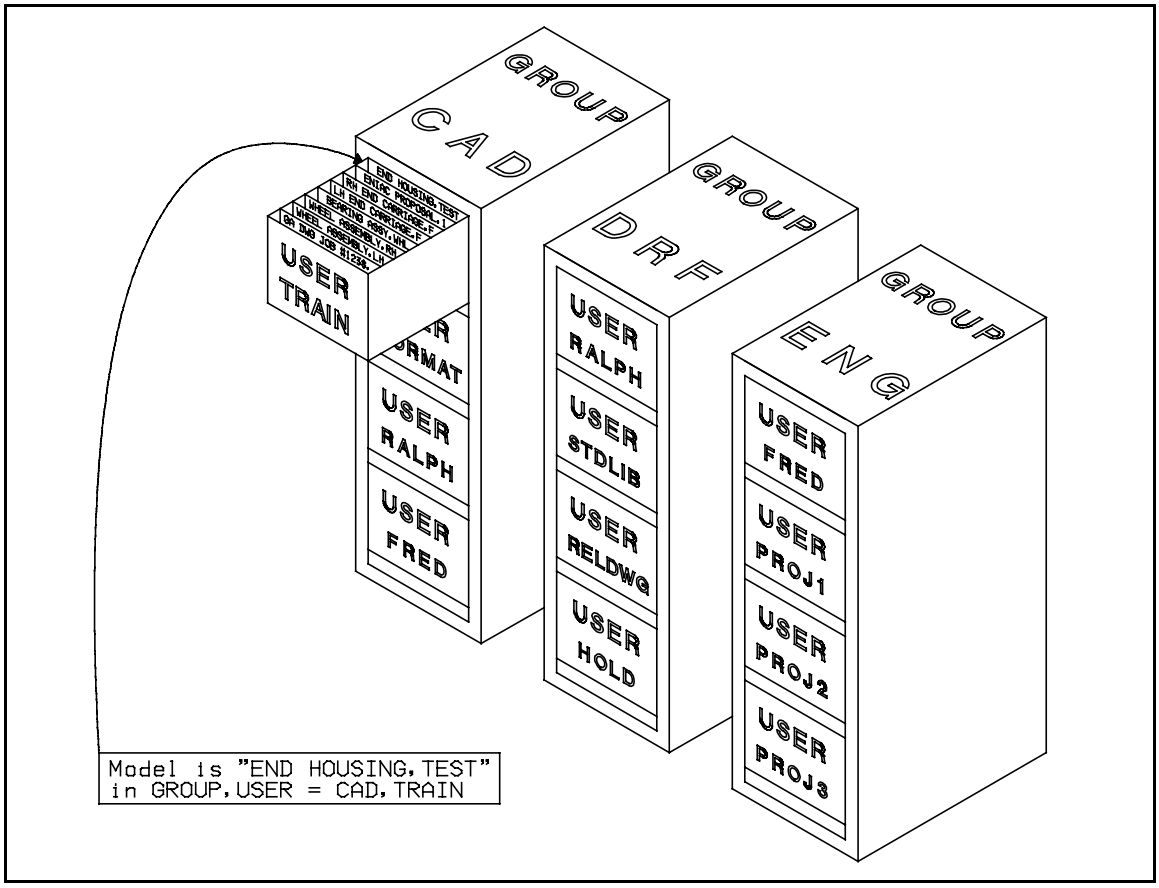

Figure 2 Micro CADAM Groups and Users

File Naming Conventions:

Users of other CAD packages are limited to the DOS file name convention of 8.3 characters (e.g. file1234.txt). The first 8 characters comprise the file name and the last 3 characters comprise the extension. In most cases the extension has a reserved name (i.e. DWG or PLT, etc.) with the result that hundreds of CAD drawing names end up being very cryptic...i.e. you must use drawing names like "89X24AVY.DWG". Only letters, numbers and some other characters can be used in a filename. You cannot have spaces and special DOS characters like "?, ., *".

MICRO CADAM drawing names are *20 characters* long and are divided up into two fields; PN (16 characters),and FN (4 characters) (See Figure 3 on page 6 - 4). Spaces and DOS reserved characters can be freely used. The models can be sorted by the first 16 characters (PN, or Part Name), or the last 4 characters (FN, or Find Name), or all 20 characters. Examples of valid MICRO CADAM model names are shown below:

· 1234567890123456,1234
· TEST HOUSING ,HOND
· PLANT OUTLINE * ,
· STARTER ,A1
· PRACTICE DRAWING,JOHN

PN (16 CHAR)	FN (4 CHAR)
PART NAME ,	FIND NAME

Figure 3 Micro CADAM Drawing Names

MICRO CADAM drawing names also have other advantages. You can do the following:

· attach descriptive text to a model name
· display model names on the display screen along with descriptive text
· retrieve (CALL) a model by selecting it from display screen
· attach READ ONLY tags to models to prevent deletion
· attach PASSWORD to models for security
· sort by the first 16 characters or the last 4 characters or by all 20 characters
· sort by file date (ascending or descending)
· easily move models between users and groups

Functions:

MICRO CADAM uses Functions to *create or modify geometry*. The following functions are available:

· Point . . . . . Creates points
· Line . . . . . Creates lines
· Circle . . . . . Creates circles and ellipses
· Spline . . . . . Creates splines
· Type . . . . . Change line types and colours
· Electrical . . . . . Has electrical capability and special utilities
· Relimit . . . . . Relimit and break elements
· Corner . . . . . Creates corner elements
· Offset . . . . . Creates offset elements
· Group . . . . . Form multiple elements into temporary groups for easy manipulation
· Symbol . . . . . Creates symbols
· Detail . . . . . Creates geometry on detail pages and places dittos and uses
· Dimension . . . . . Creates dimensions to international standards

- Analyze . . . . . Analyze elements and create section properties
- Note . . . . . Creates notes for annotating the drawing
- File . . . . . Files drawings to disk and calls up existing drawings from the disk
- Show . . . . . Erases elements and turns element display on and off
- Auxiliary View . Create related views, isometric views, true views and exploded views
- Origin . . . . . Creates multiple origins
- Window . . . . . Zoom in and out of your drawing and moves around it

These functions are activated by selecting Function Keys which are available on the pop-up FKey menu, or the side bar FKey menu. In this book the word Function Key is shortened to FKey (for example FKey Circle). These FKeys are different from the Function Keys (i.e. F1, F2, F3, F4, F5, F6, F7, F8, F9, F10, F11, F12) located at the top (or side) of your keyboard. **DO NOT CONFUSE THE MICRO CADAM Fkeys WITH THE KEYBOARD FUNCTION KEYS!**

THEREFORE, IN THIS BOOK:

***Fkey* Always refers to the MICRO CADAM Function Keys**

***Keyboard Function Key* always refers to the Keyboard Function Keys at the top or side of your keyboard**

To select a FKey press the Keyboard Function Key F1 (at the top or side of your keyboard). A Fkey menu will pop-up. The green cross on the screen is called the cursor. As you move your mouse in one direction, the cursor moves in the same direction. Position the cursor on top of the Fkey you want to select and press the SELECT button on the mouse (this is the left button). This Fkey will now become active. The active Fkey will appear in the top left area of the screen, and the Fkey submenu will appear at the bottom of the screen. Note that the Fkeys can also be selected from the sidebar menu ... the procedure is the same (CTRL-F1 toggles between the two types of menus). See Figure 9 on page 6-20 and Figure 10 on page 6-21 to show this.

Point Based CAD:

MICRO CADAM is a point based CAD program. This means that every element (an element is a point, line, circle, ellipse, spline, etc.) is created at a position where a point is already located (the point would be **SELECTED** in this case), or at an approximate

location where a point would be located (the point would be **INDICATED** in this case).

Points have the highest priority. This can be an advantage or a disadvantage depending on what you are trying to do. If you want to select a point that is in the middle of dozens of lines and circles just place the cursor over the point and press the SELECT button on the mouse. All lines and circles will be ignored and the point will be selected. Conversely, if you want to select a line or a circle you must select it away from the point.

Windows and Window size:

When drawing on the 20,000 unit x 20,000 unit electronic drawing area, you would normally start drawing on a small part of that area. This is called a window. It acts like a porthole in the side of a ship. You can look out and see a small part of the view. If you go closer to the porthole you will be able to see more of the view and if you go farther away from the porthole you will see less of the view. At the top of the computer screen you can see a line that says 'WINDOW 1.0000, 0.0". This tells us that the window size is 1.000 and the window angle is 0 deg.

Another way of looking at this is to place yourself at your drafting board (your drafting board is 20,000 inches x 20,000 inches) at a normal distance away from you. This would be called window size 1.000. If you moved backwards 1,000 inches (or 83' 4") you would now be at window size 1,000 and your drafting board would seem much smaller...but you could see more of your drawing. If you moved closer to your drafting board...lets say you begin looking at it under a microscope, you could zoom in 1,000 times closer. You would now be at window size .001 and you would be .001" away from your drafting board.

Since you can window out to size 1,000 and window in to size .001 the resolution of the system is 1,000 x 1,000 or 1,000,000:1. To get a different perspective on this pretend that you are on the space shuttle at a height of 1,000 km (or approx 625 miles). You would be able to look down to see a 30" x 60" office desk on the ground. See the top half of Figure 4 on page 7 for a graphical interpretation of this.

The bottom half of Figure 4 shows 3 pairs of vertical lines. All three pair at first appear the same but they are actually quite different. The pair of lines at window size 1,000 are 1,000 inches apart, however they appear as 1" because the window size is 1,000. The pair of lines at window size 1.000 are 1" apart and they appear as 1" apart because the window size is 1.000. The pair of lines at window size .001 are .001" apart and they appear as 1" apart because the window size is .001.

The Cursor:

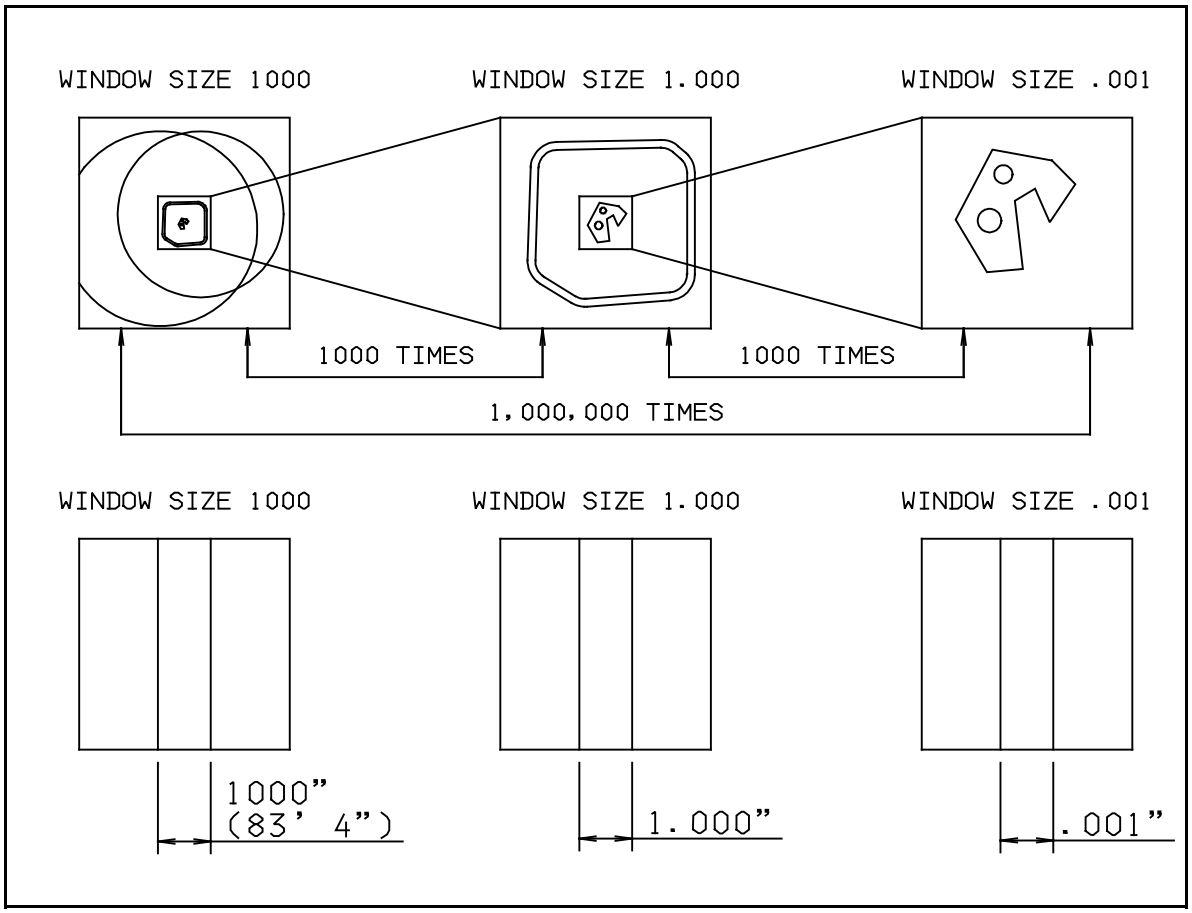

Figure 4 Windows in Micro CADAM

The small green cross you see on the CADAM screen is called the cursor. As you move the mouse, the cursor moves in exactly the same way as the mouse. Thus by moving the mouse you can position the cursor on the screen. The cursor is used to SELECT geometry or menu items, or to INDICATE position. To SELECT an element, move the cursor until it is on top of the element and then press the SELECT button on the mouse.

The Mouse Interface:

MICRO CADAM uses a mouse to move the cursor around the screen and the mouse keys to provide information for the program. The mouse buttons are setup as follows:

· LEFT BUTTON: The **SELECT** key. This is used for selecting

existing elements (i.e. Point, Lines, Circles, etc.) and menu items.

· MIDDLE BUTTON: The **INDICATE** key. This is used for indicating APPROXIMATE position.

· RIGHT BUTTON: The **Y/N** key. This is a multifunction key that can be used for a variety of functions. Its' use is specific to the function that is active. For example if an element is erased, it can be unerased by pressing the Y/N key or if the wrong end of a line is relimited it can be flipped by pressing the Y/N key.

NOTE: Should your mouse only have two buttons, the left button is the SELECT button and the right button is the INDICATE BUTTON. The Y/N button is not available on the mouse and must be accessed either by pressing the Keyboard Function key F2 on your keyboard (along the top or side of your keyboard) or selecting the Y/N option on the pop-up menu or the side bar menu.

· LEFT + RIGHT BUTTON: Pressing the **SELECT** button and the **INDICATE** button simultaneously will toggle to the WINDOW menu. The active menu is suspended and the WINDOW menu is brought up. After windowing is finished, another toggle (i.e. SELECT + INDICATE) will return to the active menu.

Figure 5 on page 6 - 9 shows the layout of the mouse buttons.

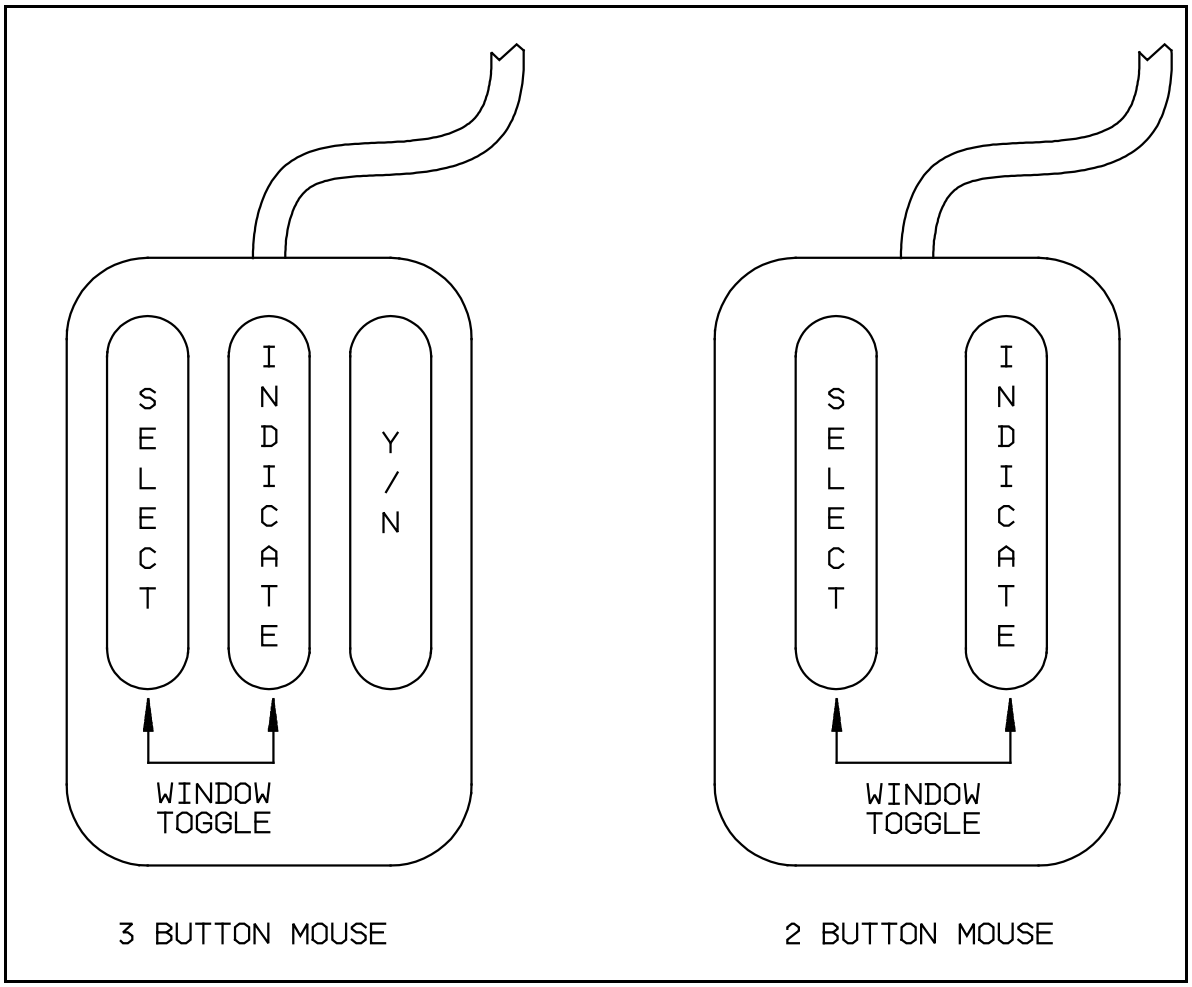

Figure 5 Layout of Mouse Buttons

Entering Information into MICRO CADAM:

There are four different ways of entering information for MICRO CADAM. The second line down from the top of the screen is the information line (See Figure 8 on page 6 - 15). This is where the program talks to you. Several different menu options, may appear here. Each is separated by a slash ('/'). For example you may see the following line:

/ Sel Pt / Ind End / Key distance / YN same DX

In this case there are four different things that we can do. They are described as follows:

a. **SELECT (Sel):** Whenever you are asked to **SELECT** something (e.g. select point, select menu, select circle, select ditto, etc.) move the cursor (that is the little green cross on your screen) by moving the mouse so that the cursor sits on top of the item you are trying to select. For example, to select a point move the cursor on top of a point and press the SELECT button on the mouse; to select a circle move the cursor on top of any portion of the circle and press the SELECT button on the mouse; to select a ditto move the cursor on top of any part of the ditto and press the SELECT button on the mouse; to select a menu item move the cursor on top of any of the submenu items (second line from the bottom of the screen ... see Figure 8 on page 6 - 15) and press the SELECT button on the mouse. Note that when you are asked to select something it means to select an *existing* element or menu item.

b. **INDICATE (Ind):** Whenever you are asked to **INDICATE** something (e.g. indicate point, indicate line, etc.) move the cursor (that is the little green cross on your screen) by moving the mouse so that the cursor sits at the *approximate* location on your screen (to INDICATE a point or a line). For example to INDICATE a point move the cursor to a location anywhere on the screen and press the INDICATE button on the mouse; to INDICATE a Line move the cursor to a position and press the INDICATE button on the mouse. Note that when you are asked to INDICATE something it means to INDICATE an *approximate* position.

There is no inherent accuracy insinuated by indicating a point or position. All indications are only approximate.

c. **KEY (Key):** Anytime you are asked to **KEY** something (it could be a distance, a length, or a note) this means *keyboard* entry. Type something on the keyboard and press the ENTER key. For example if you are asked to "/ **Key length** /" and you wanted the line to be 5 ¼" in length, you would type ’5.25’ and press the ENTER key.

NOTE: BE SURE NOT TO GET THE SELECT AND INDICATE BUTTONS ON THE MOUSE MIXED UP!!! This is a common source of error for those new to MICRO CADAM. When a point is required to finish an operation (for example lets say that you want to place a circle through three existing points) the proper procedure is to place the cursor over the 1st point and press the SELECT button on the mouse; then place the cursor button over the 2nd point and press the SELECT button on the mouse; and finally place the cursor over the 3rd point and press the SELECT button on the mouse. A circle will now appear with all three points being on the circumference. The program has interrogated each of those three *existing* points for their exact co-ordinates and uses those co-ordinates to create the circle. If you had, in error pressed the INDICATE button instead of the SELECT button for those three points, the result would have initially *appeared* the same. Both circles (i.e. a circle with 3 points SELECTED, and a circle with 3 points INDICATED) would initially *look* the same however the circle with 3 points INDICATED would only be based on *approximate* locations of the points...not *exact* locations had the points been SELECTED. This will generate a slightly different circle than you wanted, thus creating an error in your drawing.

As you work through this book, always be careful to press the SELECT button on the mouse when you want to SELECT something, and press the INDICATE button on the mouse when you want to INDICATE a location.

d. **YN (YN):** The **YN** (Yes No) button on the mouse is a multi purpose button.

If you have just erased an element the menu prompt will read 'YN restore'. This means if you press the YN button on the mouse the erased element will be restored.

When you are relimiting lines, should you relimit the wrong end of the line, you can easily flip the line to the opposite end by pressing the YN button on the mouse when the menu prompt says 'YN flip'.

Anytime you make an numeric entry to the program (for example the radius of a circle) that numeric entry is memorized and is available for the next circle. For example lets say that you have SELECTED a point for the centre of a circle and KEYED in '4.375' for the radius. A circle appears, centred on the SELECTED point and with

a radius of 4.375 inches (assuming units are in inches). To create another circle with the same radius SELECT another point; the menu prompt (2nd line from the top in Figure 8) will now give you the option ' / YN radius=4.375 /'. Press the YN button on the mouse and another circle will be created, centred on the selected point and with a radius of 4.375 inches.

NOTE: If you are using a two button mouse you must access the Y/N Fkey action by either pressing key Keyboard Function Key F2 (i.e. the Function key on the top or side of your keyboard) or by selecting the Y/N button on the pop-up menu or the sidebar menu!

2½D...What is it?:

MICRO CADAM is a 2½D CAD program. Most other CAD programs are either 2D or 3D.

Working with a 2D CAD program means that you are working just like on your drafting board; the views have no intelligence and isometrics and true views are created manually.

With a 3D CAD program all lines are created in 3D space and a single 3D object can be rotated to look at it from different directions. Most people find 3D is much harder to work with and use.

The 2½D MICRO CADAM program has the power of 3D with the ease of 2D. All the views (i.e. PV (plan view), FV (front view), SV (side view), TR (true view), IS (isometric view), etc.) are *mathematically* related to each other. Each view automatically knows at all times exactly how it is positioned relative to all other views. Information can be projected between these related views. Isometrics and True Views can be quickly and easily constructed. All views can be independently scaled, moved, rotated, shown or no shown and still retain their mathematical relationship.

Auxiliary Views:

Each MICRO CADAM drawing can have up to 63 Auxiliary views and each of these views is mathematically related to all the other views. Auxiliary views can be thought of as transparent foils on top of an overhead projector; when looking at them on the screen they all appear to be a single drawing. However if you take a marker and start to draw on top of the pile of foils, only the foil on top is actually being drawn on. The foil on top is called the *active* Auxiliary View. Auxiliary views can be 'shuffled' to the top by using the submenu function /CHOOSE/ so that information can be added or deleted, or so that information can be projected between auxiliary views. Figure 6 on page 6 - 13 shows the relationship between Auxiliary Views.

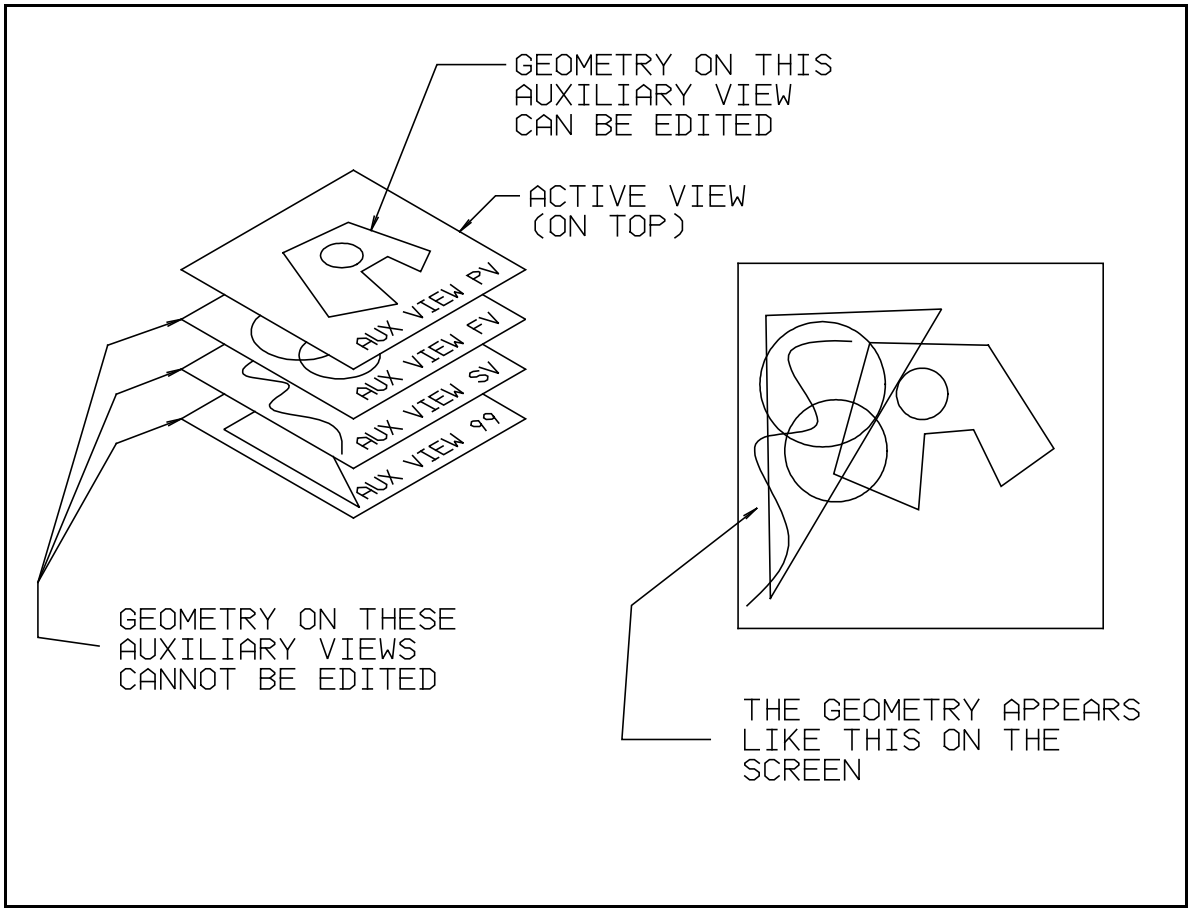

Figure 6 Auxiliary Views

Special Keys:

There are several keys on the Keyboard Function Keys that do special things in MICRO CADAM. They are summarized here: (ALL 'F' KEYS REFER TO KEYBOARD FUNCTION KEYS)

- **F1** - Pops up the Function Key Menu
- **CTRL-F1** - Toggles between the Sidebar Menu and the Popup Menu
- **F2** - The Y/N key. For those people that have only a 2 button mouse
- **F3** - Force a redraw of the screen
- **CTRL-BREAK** - Stop the redraw of the screen

Display Screen:

When MICRO CADAM is first started (by typing 'MCADAM' at the 'C:\MCADAM' prompt) the screen shown in Figure 7 below appears.

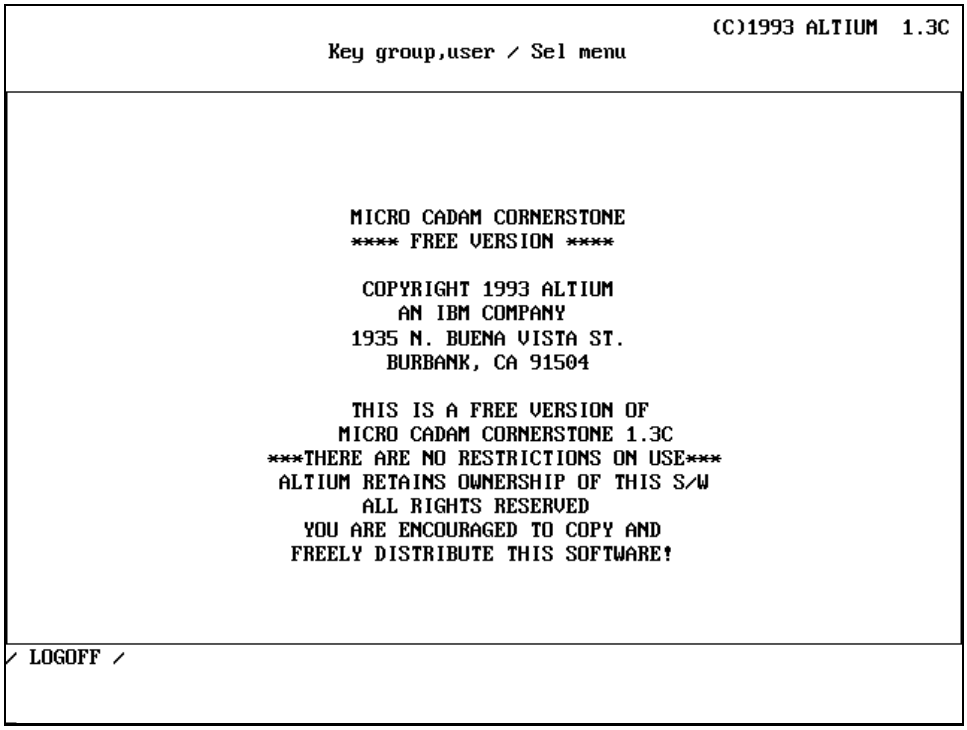

Figure 7 Initial Micro CADAM Display Screen

After the Group and User are entered (by keying ’CAD,TRAIN’ for example), the initial display screen disappears and is replaced by the working display screen (see Figure 8 on page 6 - 15).

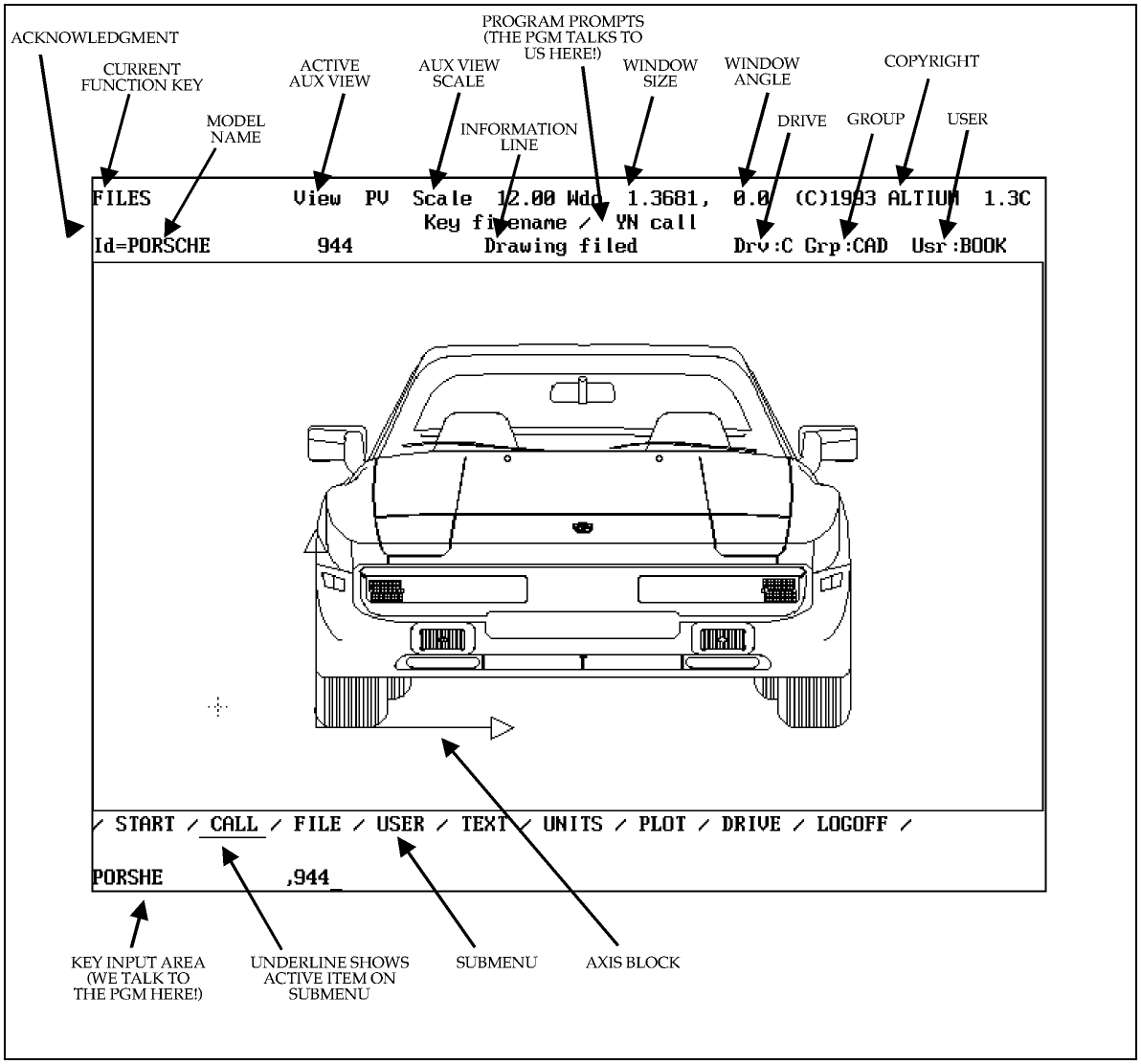

Figure 8 Micro CADAM Working Display Screen

The descriptive tags are defined below:

MODEL NAME:

This is the 20 character (i.e. maximum of 20 characters) name that we assign to our CAD drawing.

CURRENT FUNCTION KEY:

The current Function Key appears at this location.

ACTIVE AUX VIEW:

There may be up to 63 Auxiliary Views in a single MICRO CADAM drawing. These 63 Auxiliary Views are stacked on top of each other like foils on an overhead projector. The foil on top is called the Active Auxiliary View. It is on this view that new geometry is created and existing geometry edited.

AUX VIEW SCALE:

Each Auxiliary View has an Auxiliary View Scale. This is exactly like the scale that would be used on a manual drafting board. For example, a drawing may be constructed at 1/4" to the foot, or ((1/4)/12) = 1/48 = .020833333. The Auxiliary View Scale would then Read '**Scale .020833333**'. Remember that in MICRO CADAM, just like on the manual drafting board, everything is drawn full size and to a drawing scale.

WINDOW SIZE:

The window size of the drawing may be adjusted to allow different parts of the drawing to be viewed at different window sizes. For example, to view the entire drawing the window size may be adjusted to read perhaps 23.500. If a closer look at a small detail was desired the window size could be adjusted to read perhaps .025.

WINDOW ANGLE:

The window may be rotated to any desired angle. This provides assistance when working on objects that are skewed at an angle.

COPYRIGHT:

This is the Copyright from ALTIUM Inc. ALTIUM Inc. retains ownership of the Free Software included with this book. There are, however, no restrictions on use and copying of the software is encouraged.

DRIVE:

This is the drive where the MICRO CADAM models are currently being filed or called onto the screen.

GROUP:

This is the Group where the MICRO CADAM models are currently being filed or called onto the screen.

USER:

This is the User where the MICRO CADAM models are currently being filed or called onto the screen.

ACKNOWLEDGMENT:

Acknowledgments appear here to confirm actions. For instance if you SELECT a point you will see the acknowledgment 'DET POINT' which confirms that a point has been detected.

ERROR MESSAGES:

Error messages will appear here. For instance if you SELECT a point for the center of a circle and then key in a radius of 0, you will see the error message 'IMPOSSIBLE GEOMETRY'.

PROGRAM PROMPTS:

As each menu or submenu appears, the program will prompt with all options that are available. Each of the prompts are separated by slashes (/). There may be 5 or more different options available. For example the line may look as follows: *PROMPT1 / PROMPT 2 / PROMPT 3 / PROMPT 4 / PROMPT 5* . These different prompts form parts of the Road Map for each Function key. Command trees are shown with the detailed descriptions of each function key.

INFORMATION LINE:

This line provides additional information. For example, after a drawing has been filed, the line will read *Drawing filed*.

KEY INPUT AREA:

Information that must be keyed into the computer is displayed here. This is where the operator 'talks' to the computer.

SUBMENU:

Each Function key has one or more submenus associated with it. These sub menus and their associated sub submenus are displayed here.

UNDERLINED ITEM ON SUB MENU:

The active item on the sub menu is underlined. Each function key has a submenu and only one of the items on the submenu is active at one time. For example, Function Key File has items such as 'START', 'CALL', 'FILE' and 'USER'. The main Function Key is FILE, and at the submenu level the individual item must be selected to specifically access the desired item.

Function Key Selection:

DO NOT CONFUSE THE MICRO CADAM FUNCTION KEYS WITH THE FUNCTION KEYS ON THE TOP OF THE KEYBOARD! In this book whenever the word 'FKey' is mentioned, it means the MICRO CADAM Function Keys. Whenever the Keyboard Function Keys are mentioned (i.e. F1, F2, F3, F4, etc.) they will be referred to as 'KEYBOARD Function Keys'.

The Function Keys (e.g. Fkey Line, Fkey Circle, Fkey Group, Fkey Type, etc.) are used to select the main menu items. To draw a line, **SELECT** Fkey Line; a line submenu now appears on the bottom of the screen. To draw a circle **SELECT** Fkey Circle; a circle submenu now appears on the bottom of the screen.

There are two types of Function Key Menus. They are the Popup Menu and the Side bar Menu.

1. *POP-UP Fkey MENU:* The Pop-up Fkey Menu is shown in Figure 9 on page 6 - 20. Press the F1 (KEYBOARD FUNCTION KEY) to 'pop-up' the Pop-up Fkey Menu. Press the F1 (KEYBOARD FUNCTION KEY) or select a Fkey to make it disappear. Note that the green cursor is located on the FKey WN each time the POP-UP menu is displayed on the screen.

2. *SIDEBAR Fkey MENU:* The Sidebar Fkey Menu is shown in Figure 10 on page 6 - 21. Press the F1 (KEYBOARD FUNCTION KEY) to bring up the Sidebar menu (it may be necessary to toggle the menu type by pressing the CTRL-F1 (KEYBOARD FUNCTION KEYS). The Sidebar Fkey menu remains on the screen until logoff.

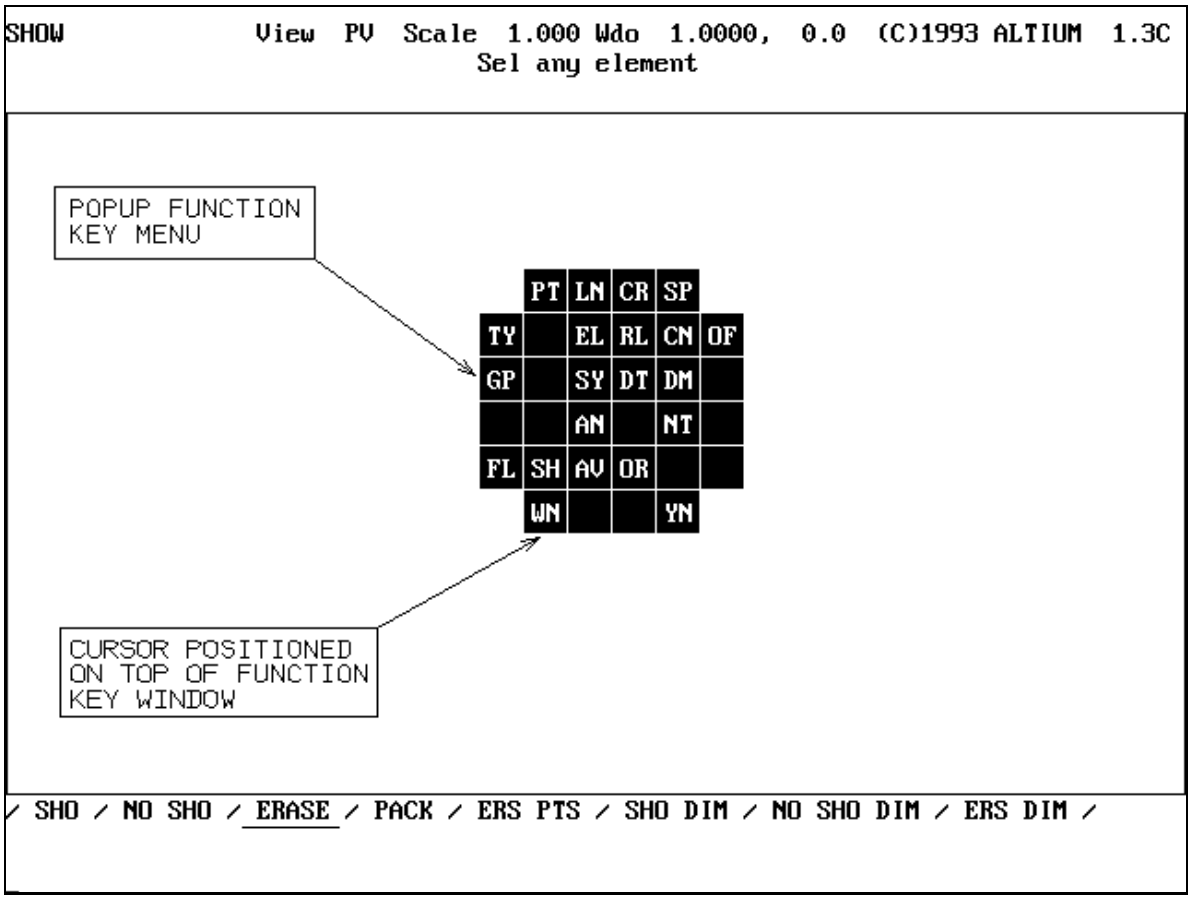

Figure 9 Popup Function Key Menu

The two letter function key designations are expanded as follows:

PT	Point	DT	Detail
LN	Line	DM	Dimension
CR	Circle	AN	Analyse
SP	Spline	NT	Note
TY	Type	FL	File
EL	Electrical	SH	Show
RL	Relimit	AV	Auxiliary View
CN	Corner	OR	Origin
OF	Offset	WN	Window
GP	Group	YN	Yes/No
SY	Symbol		

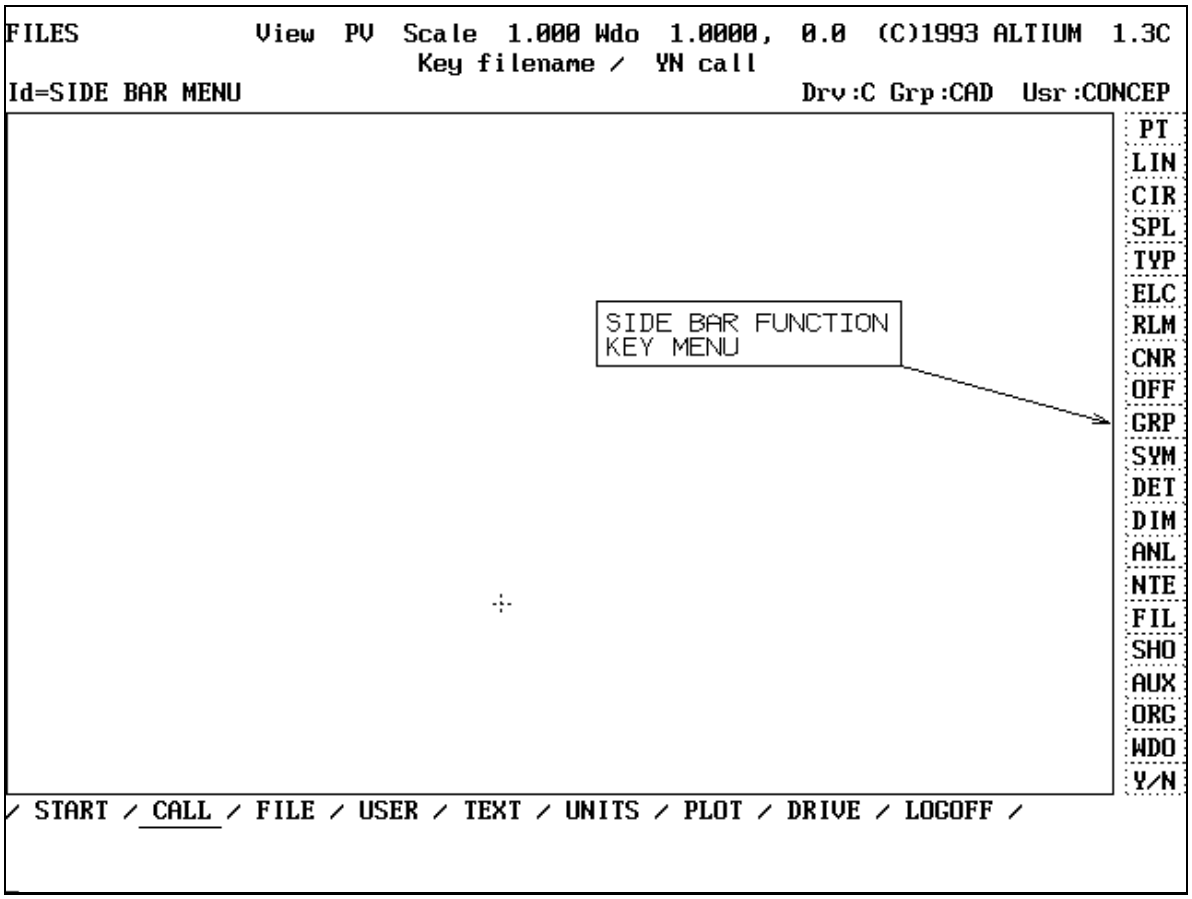

Figure 10 Sidebar Function Key Menu

The three letter function key designations are expanded as follows:

PT	Point	DET	Detail
LIN	Line	DIM	Dimension
CIR	Circle	ANL	Analyse
SPL	Spline	NTE	Note
TYP	Type	FIL	File
ELC	Electrical	SHO	Show
RLM	Relimit	AUX	Auxiliary View
CNR	Corner	ORG	Origin
OFF	Offset	WDO	Window
GRP	Group	Y/N	Yes/No
SYM	Symbol		

CHAPTER 7

QUICKSTART

This chapter of the book is designed to get you up and drawing in MICRO CADAM Cornerstone as quickly as possible. You will learn the basics of creating points, lines, and circles. You will also learn just a few of the many ways to relimit, scale, translate and rotate what you have drawn.

If you have a drafting background, you will appreciate the 2-1/2D capabilities of the software. We will be drawing the swing bracket shown in figure 1 below.

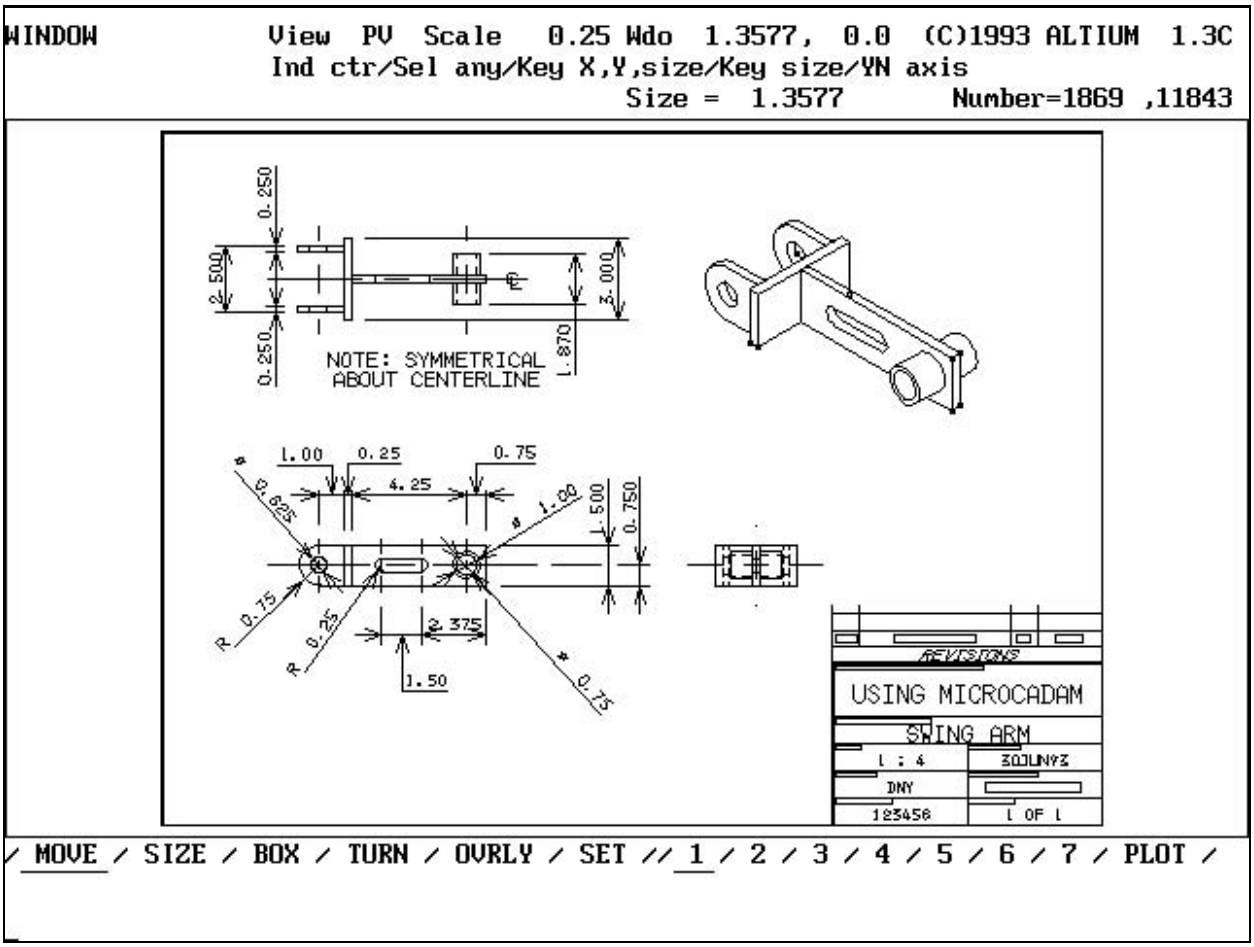

Figure 1 Swing bracket

Whether you are an experienced CAD user or a raw rookie, you will find MICRO CADAM Cornerstone very easy to use. If you have not read the concepts section (Chapter 6) of the book, please do so now! We will be using the terms that were defined in the Concepts section throughout the Quickstart and the reference sections of this book.

Perhaps the best feature of this software is the wealth of information that the screen gives you while working on your CAD model. The biggest hint that any beginning user of MICRO CADAM can use is: if in doubt of what you should do next, just look at the program prompt section at the top-centre of the screen. The software gives you the options available to you! If you are the adventurous type, you can look in the reference sections of the book for more and detailed information on how the particular *Function* works. This section will deal with just the basics of the software to get you drawing as quickly as possible. As you become more familiar with the software you will want to branch out on your own. Go ahead. Be courageous. As you become more confident in your skills, you will discover there are more ways to achieve the desired result than just the few that you will be shown. The Quickstart section is not meant to show you the most efficient way to do something (however some interesting short-cuts will be mentioned). It is meant to introduce you to as many basic methods of drawing as possible in as short a space of time.

Starting MICRO CADAM

This section assumes you have been successful in installing the software on your hard disk. You should run the MCTEST program first to make sure your mouse and video board are properly configured. Check the section in the book on installing MICRO CADAM (Chapter 1) if you experience any problems.

For the purposes of this section we will assume you installed the software on your hard disk drive D:>. Any time you see a reference to a command, you should automatically change any references to the disk drive specified to suit your installation. Also, we assume you have a rudimentary knowledge of DOS commands. If you don't, do not panic. We will do our best to explain as we go.

We ran MICRO CADAM Cornerstone on a VGA screen. If your screen does not look like the examples, or you get a menu prompt which says "Off window - YN erase / Window to save", you will have to make your "window size" larger. We recommend selecting the window function from your pop-up menu (press the keyboard function key F1 and SELECT, with the left mouse button, the square labelled WN), key the number "2" and hit the enter key on your keyboard. This will increase the viewing size of your EGA screen to approximately the same size as a VGA screen.

You can start MICRO CADAM Cornerstone either one of two ways. The first way is from

the DOS command prompt and the second is using the menu system provided by ALTIUM.

To start the software from the command prompt, change to the drive where you installed the software, change to the subdirectory \MCADAM, type the command MCADAM and hit the enter key.

For example, if you installed the software on drive D:> of your hard disk, you would type the following:

D:
cd \mcadam
mcadam

The second method of starting the program is to use the MICRO CADAM menu system provided. This is the default method if you followed the installation routine to the letter and did no customizing. When you type ***2cad*** while in the c:\mcadam subdirectory, your system is reconfigured to run the MICRO CADAM software, and will automatically restart. After your system has been reset, you will see a screen something like figure 2.

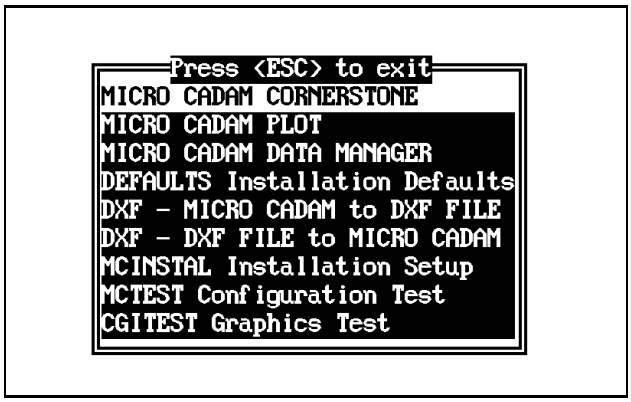

Figure 2 MICRO CADAM menu screen

After hitting the enter key, the highlighted menu item MICRO CADAM Cornerstone will be run.

Whichever method you use to load the software, the result will be the same. Your screen will go blank for a few seconds and then the opening screen of the software will be shown (figure 3).

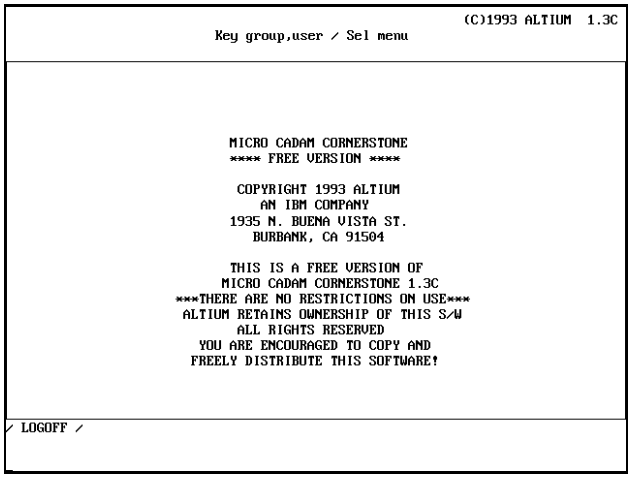

Figure 3 MICRO CADAM opening screen

Notice the menu prompt area asks you to " Key Group,User / Sel menu". On your keyboard type in CAD,QSTART and hit the enter key. In this instance, we will storing our drawings in the group "CAD" and the user will be "QSTART". If you made a typing mistake before you hit the ENTER key, you

can correct it by using the backspace key on your keyboard to erase all the characters until you come to the mis-typed letter. You may then re-type the letters CAD,QSTART and hit enter (note the " comma " is important!!). If you hit the enter key and the area on the screen that normally shows the drive, group, and user says "Invalid group,user", you just mis-typed. Re-type CAD,QSTART and you will be OK.

Take a moment to look at the screen (see figure 4).

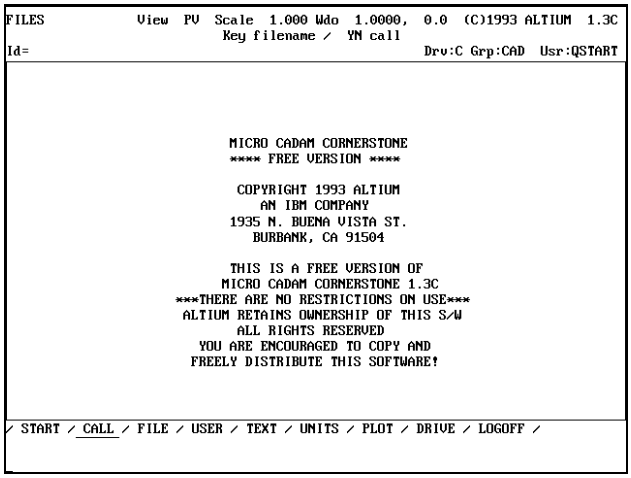

Figure 4 Opening screen

Refer back to the concepts chapter (Chapter 6) for the names of the different parts of the screen. For now, it is important to note just a few areas and what they are telling us. There is the program prompt area that says "Key filename / Y/N call". There is the area in the top right that shows the drive, group, and user that is active. Since we have not started a drawing, the "id=" line is blank.

Let’s start our first drawing. As you remember from the concepts section of the book, MICRO CADAM Cornerstone allows you to have a drawing name 20 characters long. The pattern is 16,4. The first part of the name is 16 characters long and the last part of the name is 4 characters long. these two sections are separated by a ",". "SELECT" (using the left mouse button) the submenu item on the bottom of the screen called "/START/". The menu item should now be underlined. If it is not, select /START/ again with the mouse. (For complete instructions as to the purpose of each mouse button refer to the "concepts section of the book.) Type in the letters " RANDOM POINTS,1" and hit the enter key. Your screen should change to figure 5.

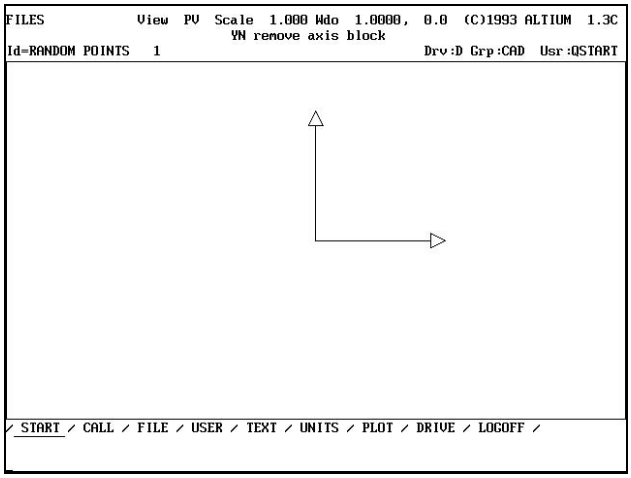

Figure 5 Initial screen

An axis appears in the middle of your screen and the program prompt area of the screen changes to say "YN remove axis block". We will leave the axis block on the screen to allow

us to maintain our orientation for entering the co-ordinates of the points we are about to draw.

FKey POINT:

Press the keyboard function key F1 and the pop-up menu appears. (For more information on toggling between the pop-up menu and the on screen menu, see the Concepts section of the book in Chapter 6.) Move the mouse cursor until it is over the PT square of the pop-up box and press the select button on your mouse. Your screen should now appear like Figure 6.

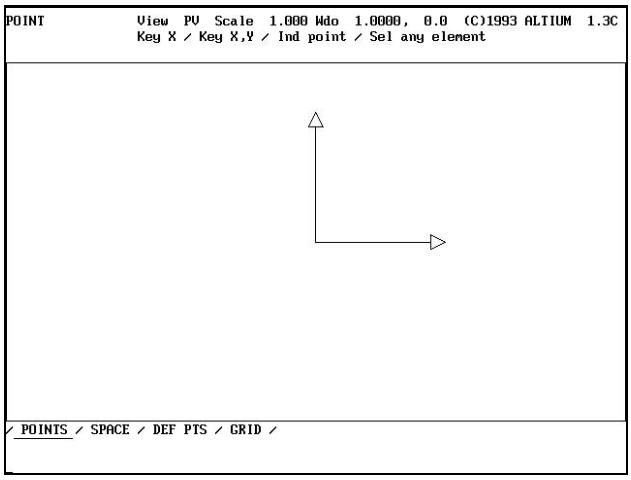

Figure 6 FKey POINT initial menu

The screen changes to show the current function to be point (top left corner of your screen) and the Function Point submenu appears across the bottom. You can randomly add points at approximate locations in MICRO CADAM. Indicate (the indicate button on a 3 button mouse is in the middle, the indicate button for 2 button mice is the right one - see concepts section) at random locations all over your screen. (i.e. Move the cursor (the little green cross) to different locations on the screen and press the indicate button on the mouse). A sample screen would look something like figure 7.

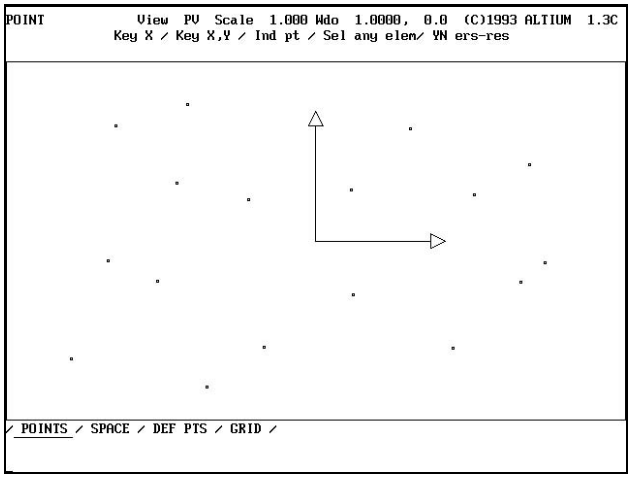

Figure 7 Random points

Lets start another new drawing. This time we will call it RANDOM POINTS,2. Press the keyboard function key F1 to display the pop-up menu and "select" with the mouse the FILES function (FL). Again you will Select the submenu START and key in "RANDOM POINTS,2" and hit enter (don’t forget the comma). You screen should change. All the points will disappear and the axis block will be left in the centre.

SELECT the POINT function from your pop-up menu (use keyboard function key F1). Using the keyboard, key in 0,0 and hit the enter key on your keyboard. A point will appear at the "origin" (see the CONCEPTS section for an explanation of the co-ordinate system). If it didn't, you will notice the program prompt line gives you the option of erasing the point you just drew by pressing the YN key (keyboard function key F2, or the right mouse button on a 3 button mouse). Key in "1,1" and hit the enter. Do the same for the following values:

-1,2
-3,-1
1.875,2
2.5,-1
0,-1.5
.75,.5

Your screen should look like figure 8.

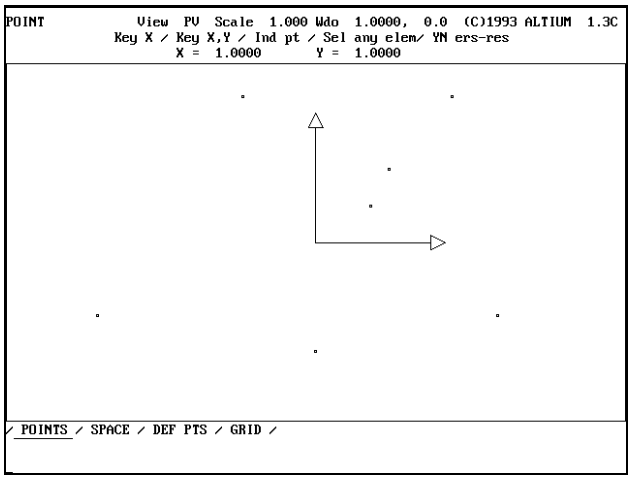

Figure 8 Points at absolute locations

If it doesn't, you may have entered an incorrect coordinate value, or you may have a screen display other than VGA.

You can create points from existing points. Select the point at co-ordinates -1,2 and the select the point at co-ordinates 2.5,-1. A point appears at co-ordinates that are exactly half way in between the two selected points. We will do more point work as we go through this QuickSTART section of the book. We will "define" the points of an object as well as space a series of points along an object.

FKey LINE:

MICRO CADAM allows the user many different ways to produce lines. You can use existing geometry to aid in the construction of lines or you can key in the information directly from the keyboard. MICRO CADAM has a unique line type - the unlimited length line.

Press the keyboard function F1 to get your pop-up menu and select Fkey line (LN). Notice that the default active settings (underlined submenu items) are horizontal and unlimited. Key in the value 1 and hit enter. A horizontal line appears on your screen going through the Y co-ordinate value of 1. By pressing the YN button (keyboard function key F1 or the right most mouse button on a 3 button mouse), you can toggle the display of the line on and off. Note that the program prompt area has an option saying "/YN erase-restore". If you ever have any

doubts as to what to do next, look at the program prompt area of the screen. It will tell you what your options are for the submenu items that are active. Your screen should look like figure #9.

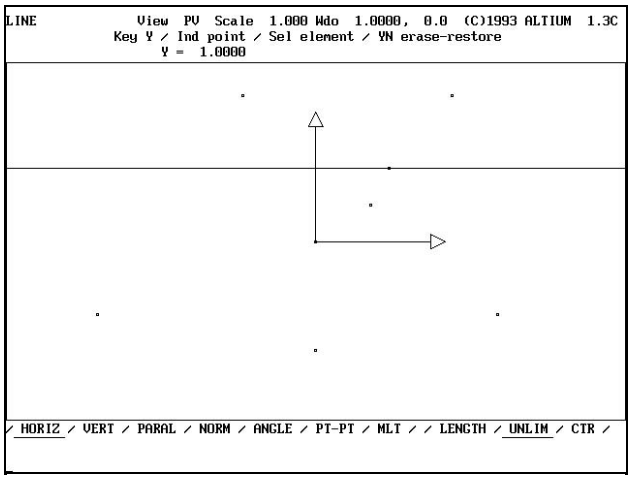

Figure 9 Horizontal line drawn through a point having a Y value of 1

Add three more horizontal lines by "indicating" just above the line we drew at Y=1. Use the "indicate" button of the mouse (see concepts for mouse button usage). The position of these lines are approximate. We did not key in an exact value for Y, but just "indicated" approximately where we would like the line to appear.

We can use the points on the screen to supply the "Y" co-ordinate. Select the point at co-ordinates -3,-1. A horizontal line appears on your screen. MICRO CADAM automatically analyses the point that you selected and uses the "Y" value of the points co-ordinates to draw the line. Try drawing another horizontal line using the point at co-ordinates 0,-1.5. Your screen should look like figure 10 with the only difference being the two lines you indicated may not be in the same place as shown.

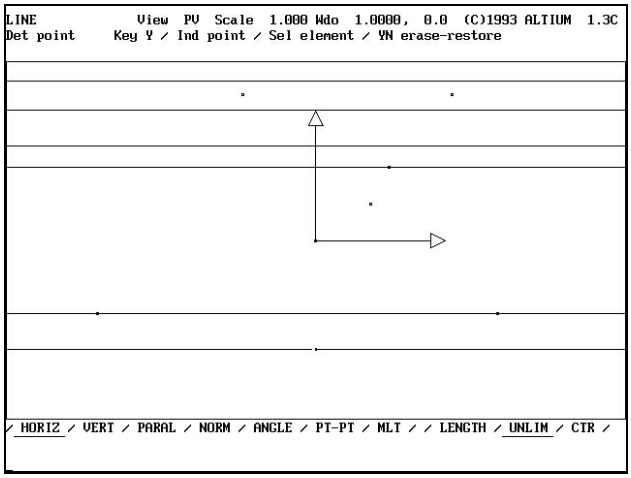

Figure 10 Horizontal lines

The same process applies to drawing unlimited vertical lines. Select the submenu item VERT (for vertical). VERT should now be underlined telling you that MICRO CADAM will now draw vertical unlimited lines. SELECT the points at co-ordinates -1,2 and co-ordinates 2.5.-1. "INDICATE" with the mouse to draw 2 vertical lines in between the two vertical lines you have just drawn. Practice drawing a few more vertical and horizontal lines by either "selecting" the existing points or "indicating" an approximate location. As you draw these lines, use the YN key to erase each one immediately after you have drawn it.

MICRO CADAM allows you to draw lines from one specific point to another specific point. "SELECT" the submenu item PT-PT. MICRO CADAM assumes you wish to draw a line of specific length when you choose the PT-PT submenu, so the submenu item LENGTH also becomes underlined. SELECT the point at co-ordinates 1.875,2. The program prompt area

should now say Key X,Y / Ind point / Sel Element 2. We will use the Sel Element 2 option and SELECT the point at co-ordinates 2.5,-1. Draw another line PT-PT using the point at co-ordinates -3,-1 and the point at co-ordinates -1,2. Your screen should look like figure 11.

Use some of the other existing points to draw some more PT-PT lines using the Y/N option to erase each immediately after it has been drawn.

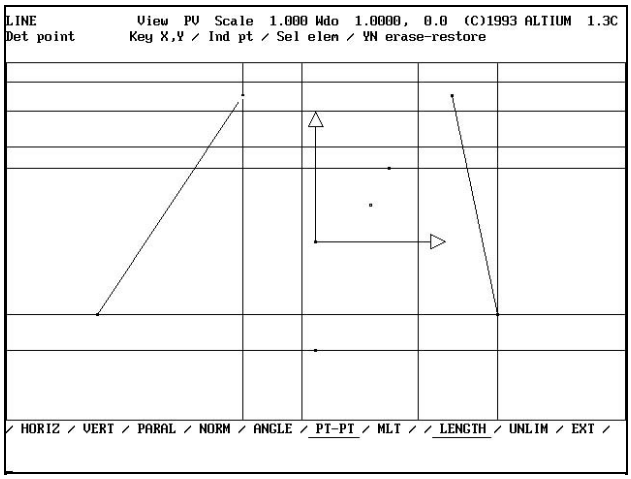

Figure 11 Vertical and Point to Point lines

You can use other geometry besides points to create a line from one point to another point. SELECT the first line you drew (right side of screen) making sure you do not SELECT close to an existing point. The PROGRAM PROMPT area now changes to say Ind end / YN center / Sel point. INDICATE near the top of the screen. The Program prompt area changes to Key X,Y / Indicate point / Sel element 2. SELECT the other PT-PT line you drew and click the YN button on your mouse or press the keyboard function key F2. You now have drawn a line from the endpoint of one line to the center of another (see figure 12). Notice how the program prompt area has an option that says YN erase-restore.

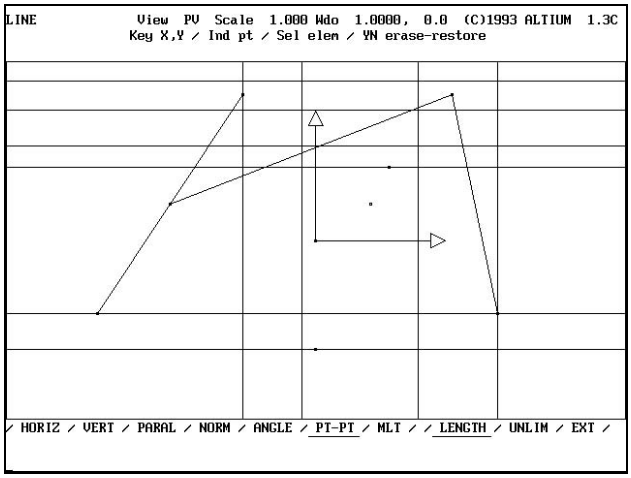

Figure 12 Line drawn using existing lines.

MICRO CADAM automatically detects the type of geometry (point, line, circle etc.) that you SELECT. It then gives you the option of choosing how you wish to use the existing geometry to create new geometry.

MICRO CADAM gives you the option of drawing a "CHAIN" of lines from point to point to point to point. To return to the original program prompt options, SELECT the submenu PT-PT again. Now the YN button gives you the chance to enter the chain-mode of drawing point to point line. Press the YN button to enter chain mode. SELECT the point at co-ordinates 0,-1.5 and then SELECT the point at co-ordinates -3,-1. SELECT the point at the origin (0,0)

and then select the first point to point line you drew. Notice how the program prompt area has now changed asking you tell the software which end of the SELECTED line you wish to use (Ind end) or whether MICRO CADAM should use the center of the selected line (YN center). Press the YN button to use the center of the line as an endpoint for your new line. Your screen should now look like figure 13.

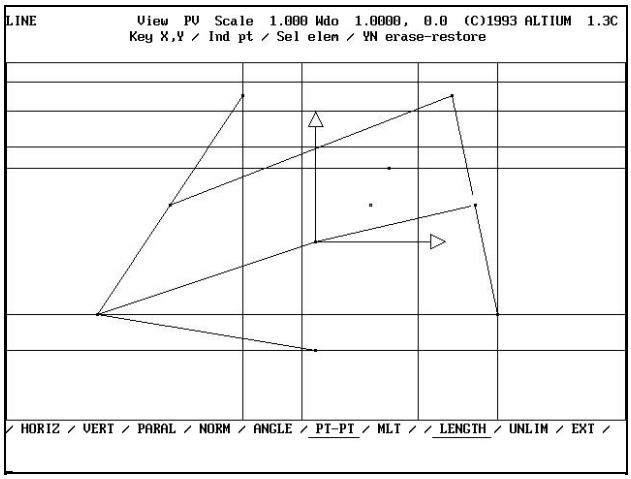

Figure 13 Using Y/N chain to produce PT-PT lines.

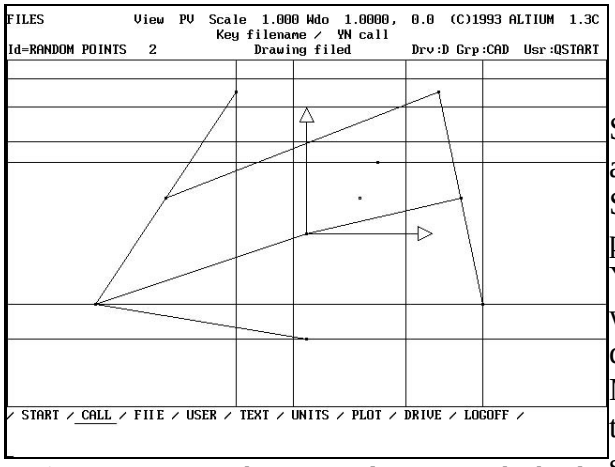

Figure 14 Storing the current drawing on the hard disk.

Save this drawing by using your pop-up menu and SELECTING function key FILES (FL). SELECT the submenu item FILE. The program prompt area now asks you to Key filename / YN same name. Notice that the drawing name we originally used RANDOM POINTS,2 is displayed in the lower left corner of the screen. MICRO CADAM is asking us to either accept this name for the file or change the name to something else. For now, we will accept this as the name of our drawing by pressing the YN button. After storing the drawing on our hard disk the information line below the program prompt area tells us the drawing has been filed (figure 14).

Experiment with the function LINE (re-select FKey Line from the pop-up menu) and see what other options and methods of line drawing you can discover. If you are unsure as to what you should try next when you are part way through drawing a line, always check the program prompt area of the screen. MICRO CADAM tries to help you along by giving you options to consider. If you feel you are unsure of what you are doing, do not despair. By re-selecting a submenu item, you will cancel what-ever it is you were in the process of doing and will be able to start again.

FKey FILE:

Congratulations on saving your first drawing. By now, you should be familiar with starting a

new drawing in MICRO CADAM. You can CALL an existing drawing two ways. SELECT the FILES function from your pop-up menu. Notice how the program prompt area gives you your two options. If you are absolutely sure of the file name, you could key the name in at the keyboard and hit enter. However, most MICRO CADAM users press the YN button and SELECT the file that they want. Press the YN button and your screen changes to look like figure 15.

```
FILES            View  PV  Scale  1.000 Wdo  1.0000,  0.0  (C)1993 ALTIUM  1.3C
                           Sel filename / Key page #
Id=RANDOM POINTS   2              Drawing filed        Drv:C Grp:CAD  Usr:QSTART
                                                                PAGE 1
   SWING ARM DIM        RO
   SWING ARM ISO        RO
P  SWING ARM FINAL XXX  RO
   RANDOM POINTS   2

/ FWD / BACK / CALL / DELETE / CHANGE / USER / RETURN / LEV 3 / SHOTXT /
```

Figure 15 Calling a previously saved drawing.

Now all you have to do is move the mouse cursor over the name of the drawing that you want to CALL and SELECT it. Try it!! Most MICRO CADAM users find this method much easier than having to type the name of the file to be CALLed.

If you accidently pressed the YN button on your mouse instead of the SELECT button, you may have got this screen. Do not panic. Your drawing has not been lost. It is still in the memory of your computer. Just select the submenu item RETURN and you will get your drawing back on screen. The drawing that you have been working on, stays active until you CALL another drawing or until you LOGOFF from MICRO CADAM.

A word of warning, if you have made changes to a drawing and then SELECT LOGOFF to leave MICRO CADAM, the software ***does not*** warn you directly that the drawing has changed and that you should refile it. It just asks you to press the YN button to LOGOFF. A good habit is always FILE your work before you LOGOFF.

You can change to a different GROUP,USER in 2 ways. From the main screen of function FILE, you can SELECT the submenu USER. The program prompt area changes to say "Key group,user / Sel menu". You now can use the keyboard to type in the GROUP,USER that you want to change to (don’t forget the comma !!!!!). You would use this method if the GROUP that you want to be in is different then the one that you are currently in.

If all you want to do is change to a different USER inside the same GROUP (see concepts section for an explanation of GROUPs and USERs), select submenu /CALL/, then press the YN button. You will get the screen that shows all your drawings in the current USER (see fig. 15). Instead of SELECTING a drawing to CALL, SELECT the submenu item /USER/. Your screen will now show you all the USERS that you have in the GROUP called CAD. You are now free to SELECT the USER you wish to be in. You can accomplish all this

without losing your drawing. Your drawing stays active in the computer's memory.

MICRO CADAM users frequently store drawings that can be used as STARTER FORMATS in a separate USER (called FORMAT for example) for easy recall. These drawings may be preset for a particular scale or page size, or just a drawing that has your AUXILIARY VIEWS and favourite colors already established. This is an excellent way to maintain consistent drafting standards throughout your company. By storing blank title blocks for use as your starter drawing, you save time by never having to worry about establishing plotting parameters every time you change to a different size of paper.

SELECT the submenu item RETURN (you may have to SELECT RETURN twice if you were at the SELECT USER screen) to get back your drawing screen. You should still be in the GROUP,USER CAD,QSTART (check the top right corner of your screen). If you are not in the QSTART user change to it now (see above).

You can easily change the DRIVE you are storing your drawings on. SELECT the submenu /DRIVE/ and you will get the program prompt asking you to "Key drive". Just type the DOS drive letter that you wish to store the drawing on (for example "A") and press the enter key. You can use this method to store drawings to either a hard drive or a floppy drive.

SELECT the FKey FILE submenu item /UNITS/. Your screen changes to look like fig. 16.

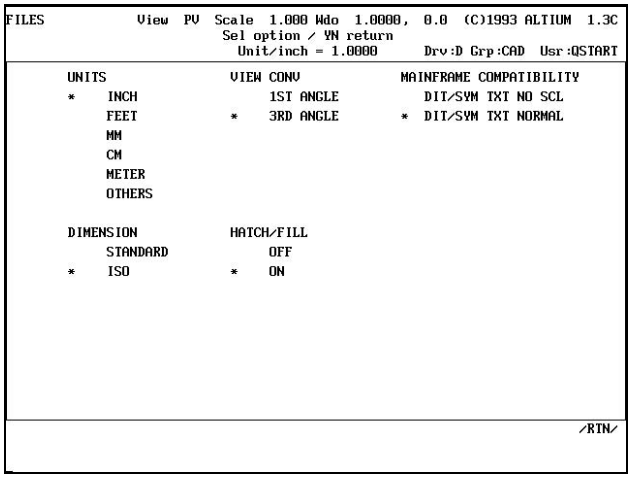

Figure 16 FKey FILE sub-menu item /UNITS/ display.

You will use this submenu to establish certain drawing parameters. When-ever you type in a number, MICRO CADAM Cornerstone assumes that each full unit matches what you have defined on this screen. For example, during the exercises we have been doing, every time you have entered a value, MICRO CADAM has assumed it represents some portion of an inch. If you had changed the units to be MM, then each value would represent a millimetre. MICRO CADAM allows you to enter information in feet and inches format as well. Regardless of the UNITS defined, MICRO CADAM will force the value you enter to suit what you want. Notice in the top centre portion of the screen, there is a prompt which says Unit/inch = 1.0000. SELECT the MM text on the screen, This prompt then changes to "Unit/inch = 25.4" MICRO CADAM automatically converts between feet and inches, and millimetres and metres. (Make sure Units are inches before leaving this screen).

This submenu also allows you to establish the dimensioning standard you wish to use, the view convention that will apply when you establish auxiliary views (more on FKey AUX VIEW later in the book), whether or not you wish to display your hatch and fill patterns, and lastly, your compatibility with mainframe CADAM users that you may exchange drawings with.

If you wish to take a break at any time, just FILE your drawing (to save your work), and SELECT the submenu item LOGOFF. Press the YN key to exit MICRO CADAM Cornerstone. When run the program later on, Key in the GROUP,USER that you were working in, (e.g. CAD,QSTART), press the YN button to CALL your drawing, and SELECT the drawing from the screen.

FKey WINDOW

MICRO CADAM Cornerstone has a fully transparent WINDOW function. No matter what you are doing, you can change the viewing size or location of your window at will. The CONCEPTS section of this book (Chapter 6) gives you some idea as to the scope of window sizing available to you.

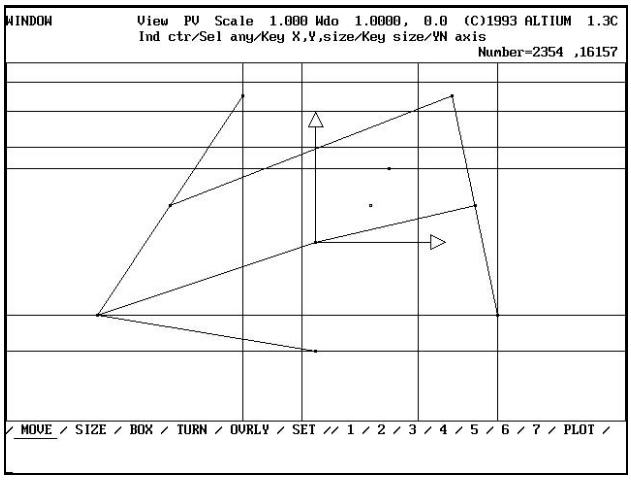

Figure 17 FKey WINDOW.

You access FKey WINDOW in one of three ways. You can press the keyboard Function key F1 to get the pop-up Function box and SELECT "WN". If you are using the function key side bar, you would SELECT " WDO ". You may also get the WINDOW Function by simultaneously pressing the SELECT and INDICATE buttons on your mouse. This may take a little practice to get used to, but once you have a feel for the timing on your mouse, it is a great way to toggle between whatever MICRO CADAM Function you were working on, and changing your window size. We recommend that when you do use the toggle method to get your FKey WINDOW submenu, you move your cursor to a blank space on the screen before you press the two buttons. This helps eliminate the problem of inadvertently SELECTing an element when toggling to window.

SELECT Fkey WINDOW. Your screen should look like figure 17.

Notice on the very top line of your screen the message " Wdo 1.0000, 0.0". This tells you

the viewing size and rotation of your current window. This information is present on screen no matter what MICRO CADAM FKey you are using. By default, every time you START a new drawing or CALL an existing one, your window size and orientation will always be size 1.0000 and angle 0.0.

Changing the size of your window in MICRO CADAM is quite easy. The simplest way is to type in a size directly. SELECT submenu /MOVE/ and then type in the value 2.75 and see what happens to your screen. Notice everything has become smaller except the Axis symbol. Looking at the top center portion of your screen, you now see that the WINDOW size has been changed to 2.75. Return to WINDOW size 1 by typing in the number 1 and hitting enter. The screen returns to it's original size.

To move around your screen you can either SELECT or INDICATE where you would like the center to be. SELECT submenu /MOVE/ and then SELECT the point at co-ordinates 1.875,2. Your screen should look like figure 18.

Notice how your screen is now centred on the point 1.875,2. You can use the INDICATE button on your mouse to tell MICRO CADAM *approximately* where you would like the center of your drawing to be. Try INDICATING a few locations on your screen and see what happens.

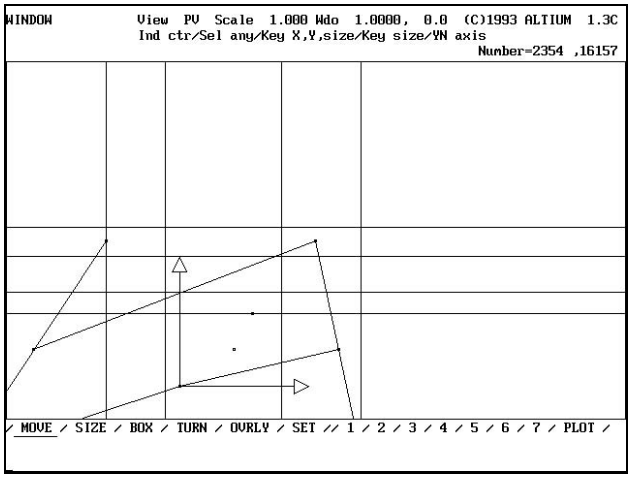

Figure 18 Window centered about point (1.875,2).

To restore your drawing to the original position, just press your YN button. This forces MICRO CADAM to center your drawing about the origin (AXIS) 0,0. As you become more familiar with MICRO CADAM, you will find the YN button to be very useful.

Instead of keying in an exact window size, you can approximate a size. SELECT the submenu item SIZE from the FKey WINDOW menu. (A submenu item is selected if a line appears underneath it). Imagine an invisible line running through the centre of your screen. If you were to INDICATE above this line, your window size would get larger, and if you INDICATE below this imaginary line, your window size would get smaller. Try INDICATING above and below this imaginary line to get used to how this works. Notice that your drawing stays centred about the origin. Again, you can return to a window size of 1 by just hitting the YN button.

If you wish to get a closer look at a particular area of your screen, just SELECT the submenu

item BOX. By INDICATING a BOX of the size you need, you can get a closer look at your drawing. SELECT the submenu item BOX. The program prompt area has an option that says "Ind corner". INDICATE somewhere in the lower left corner of your screen. Indicate somewhere in the top right corner of your screen. You should see your window size change to something smaller than 1.000. Note the program prompt area now allows you to use the YN button to go back to your previous window (YN back). If you were to SELECT an element while having the submenu item BOX active, your screen would center itself on that element.

You can store up to 7 window positions in any given drawing. SELECT the submenu item MOVE from FKey WINDOW's menu. SELECT the line connecting the points -3,-1 and -1,2. Now your window is located about the center point of the line. You do not have to SELECT a point to center a window; you can SELECT any element as the center point. To save this particular window, SELECT the submenu item SET. The program prompt area asks you to "Sel set number". SELECT the number 1 at the bottom of the screen. This stores all the information about this particular window position in your drawing. Press the YN button to center your drawing on the origin and then SELECT the submenu item 1 at the bottom of your screen. Your saved window is restored. Unless you redefine the WINDOW SETS, they default to a window size of 1 with the center point being the origin. Try SELECTing window SET #4 and see what happens.

Experiment with the options that the program prompt area gives. You should be getting familiar with the way the MICRO CADAM program prompt area helps you along by providing your alternatives. If you are ever in doubt of where you are located while performing some action, in most cases you will be able to start again by RESELECTING either the FKey or the submenu item.

You can do as many WINDOW changes as you need without interrupting the other FUNCTION that you may have active. For example, you could be drawing a line from point to point that requires you to WINDOW BOX into a specific area, TOGGLE back to the FKey LINE to allow you to SELECT a point, TOGGLE back to FKey WINDOW to change the SIZE of your drawing, WINDOW BOX in on the other point, TOGGLE back to FKey LINE to SELECT the endpoint of your line. All this can be accomplished with your hand never leaving your mouse!!!!!

ERASING ELEMENTS IN MICRO CADAM Cornerstone:

To erase an element or a GROUP of elements in MICRO CADAM Cornerstone use FKey SHOW. Access FKey SHOW by SELECTing either the SH box on the pop-up menu or the box SHO on the side bar menu.

To erase one of the horizontal lines on your screen, SELECT the FKey SHOW from your

menu. When you first SELECT FKey SHOW, the submenu item ERASE is always the default active item (see figure 19).

Notice the program prompt area says "Sel any element". By simply SELECTing any of the lines on the screen, you will erase that line. SELECT one of the horizontal lines. The program prompt area changes to allow the YN button to "YN restore element". This allows you to undo the last erasure if the wrong line is SELECTed.

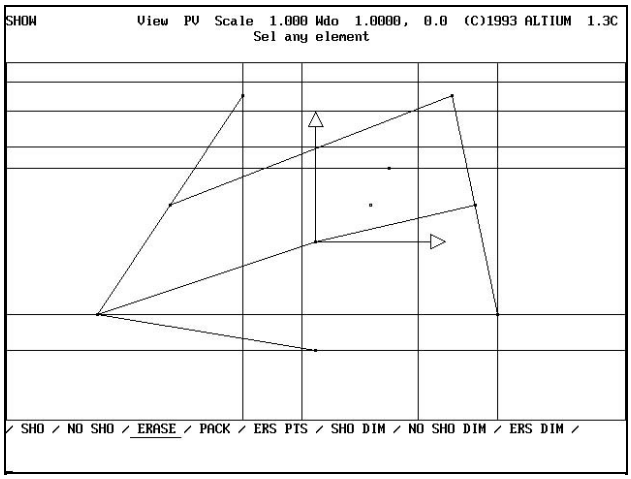

Figure 19 FKey SHOW menu.

> NOTE: If you do not restore the erased element(s) at this time, you will not be able to restore them later. MICRO CADAM Cornerstone does not keep a list of all erased elements in memory.

If you had defined a GROUP of elements (more on defining GROUPs a little later), The program prompt area would have added an extra option telling you to" YN erase group".

By SELECTing the submenu item ERS PTS you would be able to erase all the points in the entire drawing or - if you had defined a GROUP - all the points in that GROUP.

> NOTE: MICRO CADAM Cornerstone does not allow the use of "YN restore" when you have erased points !!!!!

The submenu items SHO and NO SHO allow you to temporally suppress the display of an element or a GROUP of elements. MICRO CADAM also allows you to quickly suppress the display of dimensions by using the submenu item NO SHO DIM. You can quickly erase all dimensions by simply SELECTing the ERS DIM submenu item.

DRAWING CIRCLES IN MICRO CADAM Cornerstone:

Here are a few ways to draw circles in MICRO CADAM Cornerstone. There are many variations on the techniques that you will be shown. If you need to find out more about any of the other options, feel free to look in the reference section of this book (FKey CIRCLE in

Chapter 13) for more information.

If you have a point that is at the center of a circle you want to draw, you can SELECT the point and then type in the exact radius that you require. SELECT the FKey CIRCLE from your menu (CR on the popup, and CIR on the sidebar). SELECT the point at 0.75,.5. Note the program prompt area tells you to " Key rad = 0.00000". Key in the value 1.1. A circle with a radius of 1.1 appears centred about the point .75,.5 (see figure 20). Again, you have the option of pressing the YN button to erase or restore the circle you have just drawn if it is not to your liking.

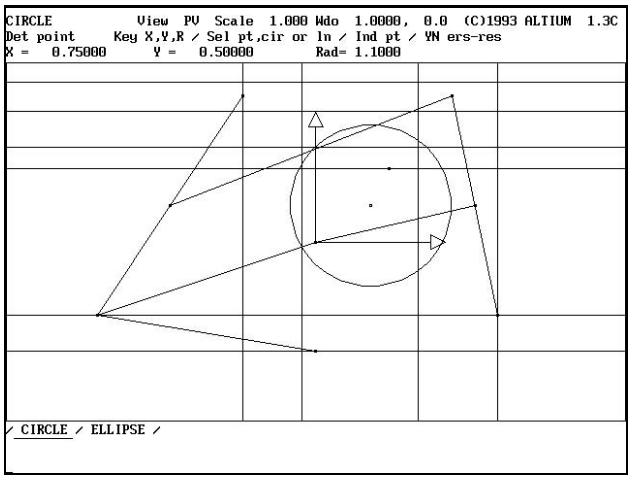

Figure 20 Circle with a radius of 1.1.

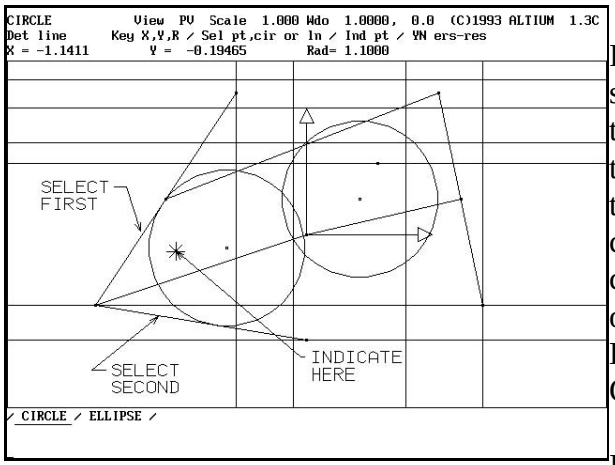

Figure 21 Circle drawn tangent to two lines with a given radius.

INDICATE three different points on your screen. If the circle that appears is not fully on the screen, press the YN button to erase it and try again. This method draws a circle through three points that lie on the circumference of a circle. Use the YN button to make sure the circle you have just drawn is erased. If that option is not available, use FKey SHOW to ERASE the circle and the re-SELECT FKey CIRCLE.

If you do not require an accurate center for the circle, you can substitute INDICATE instead of SELECT for choosing a center point. INDICATE somewhere on your screen, then key a radius of 1.1. A 1.1" radius circle appears. Now press the Y/N button to erase this circle.

SELECT the line that joins the points at -3,-1 and -1,2 and then SELECT the line that joins the points at -3,-1 and 0,-1.5. The program prompt area now allows you to " Key radius = 1.1000". If you were to press the YN button, the value 1.1000 would be accepted as the radius of the circle. This ability of the YN button in MICRO CADAM is not mentioned in the program prompts but usually works whenever the value you want is displayed at the top of the screen. Press the YN button. The program now prompts you to ’Ind center". This method will produce a circle tangent to two lines with a specific radius. Though the lines

have a specific length, MICRO CADAM thinks of these lines as being of unlimited length. Therefore, there are four possible locations for the center of a circle that is tangent to two lines. That is why the software prompts you to INDICATE where the center point is to be. INDICATE to the left of the first line and above the second line. See figure 21 for the lines to be SELECTed and where you should INDICATE.

FILE your drawing. SELECT FKey FILE from your menu and SELECT submenu item /FILE/. Press the Y/N button once to accept the displayed file name, and then press Y/N again to replace the existing drawing. Now you can experiment with drawing circle. Try different combinations of SELECTing and INDICATing different elements. Remember to always look at the program prompt area to see what your possible actions are. CALL your previously saved version of RANDOM POINTS,2 before you continue to the next section of the QUICKSTART. NOTE: Press the F3 key to periodically redraw the screen.

FKey RELIMIT:

FKey RELIMIT allows the user to adjust the endpoint of an element or group of elements. You may also BREAK an element around either a given point or a given element. You can restore an element to it's original state by CLOSing it.

First, ERASE the other two circles on your screen by SELECTing FKEy SHOW and then SELECTing the two circles. Draw a CIRCLE around the origin with a radius of 1.3. SELECT FKey CIRCLE, SELECT the point at the origin 0,0, and then key in the value 1.3 and hit ENTER on the keyboard. SELECT the FKEy RELIMIT. (RL on the popup menu and RLM on the sidebar menu). SELECTing RLM. Your screen should look like figure 22.

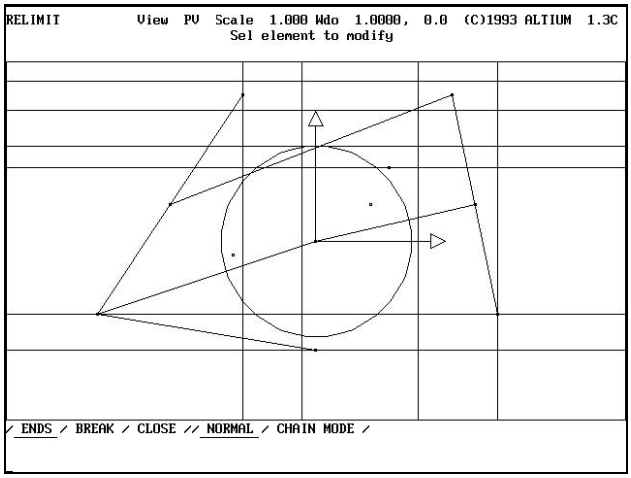

Figure 22 FKey RELIMIT menu.

The default active submenu items are ENDS and NORMAL for FKey RELIMIT. These submenu items allow you to adjust the ENDpoints of an entity one at a time. SELECT the vertical line on the far right side of your screen. Notice how the length of the SELECTED line has changed and that the color has become green. MICRO CADAM highlights entities that are SELECTED to help the user see what they are altering, moving or adjusting. SELECT the top most horizontal line. The line stays highlighted as you may still "YN flip" (see program prompt area of screen). Should the wrong end of the line relimit, press the Y/N button and the line will 'flip'...try it!!! One end of the line stops where it

intersects the horizontal line you SELECTed.

You can RELIMIT lines to other entities besides other lines. SELECT the unlimited vertical line that is the farthest left on your screen somewhere near the top of your screen. The program prompt now asks you to "Sel intersecting element". SELECT the circle you just drew, but SELECT it close to the top of the circle. There are two possible intersections that the line could have used as the new end point. MICRO CADAM Cornerstone tries to make an educated guess as to which intersection you wanted to use based on the location of where you SELECTED the intersecting element. By SELECTing the circle near the top, SELECT the circle near the bottom. Compare figure 22 and figure 23 to see the different results you will get.

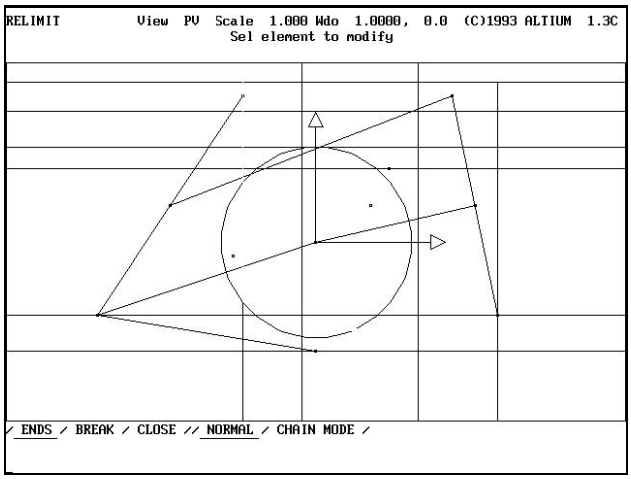

Figure 23 Relimited lines.

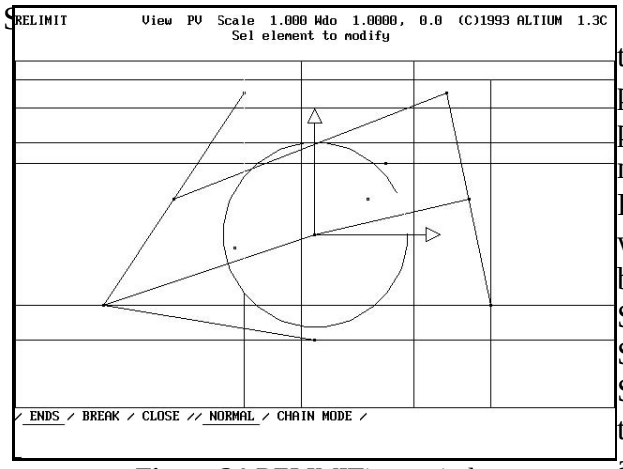

Figure 24 RELIMITing a circle.

telling the software to use the top intersecting point. SELECT the submenu item CLOSE. The program prompts you to "Sel element to modify". SELECT the line you just RELIMITED. If you happen to SELECT the wrong line, don't worry, just press the YN button and the line will be restored. Now SELECT the submenu item ENDS and SELECT the line you just CLOSEd. Instead of SELECTing the circle near the top, SELECT the circle near the bottom. Compare figure 22 and figure 23 to see the different results you will get.

MICRO CADAM tries to aid you in your drawing by anticipating what you want to do based on your prior actions. Let's relimit the circle you drew around the origin. A circle has a start and endpoint at 3:00 o'clock. Therefore, it becomes important to SELECT the circle at the appropriate spot to alter the endpoint. SELECT the circle centred on the origin somewhere around the 2 O'clock spot (see fig. 24).

Notice how the circle now looks like it is missing a piece. What you have done is shown MICRO CADAM which end of the circle you want to modify by SELECTing at a certain spot. SELECT the horizontal line that goes through the circle right at the top. This line will be the intersecting element for the new endpoint of the circle. Your screen should look like

figure 25.

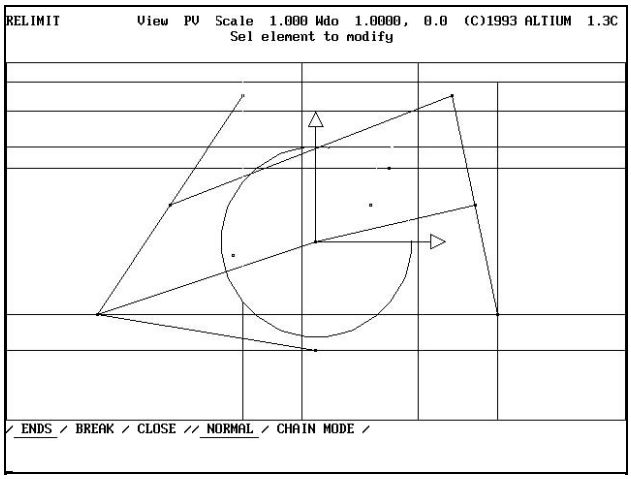

Figure 25 Top of the circle RELIMITed to a horizontal line.

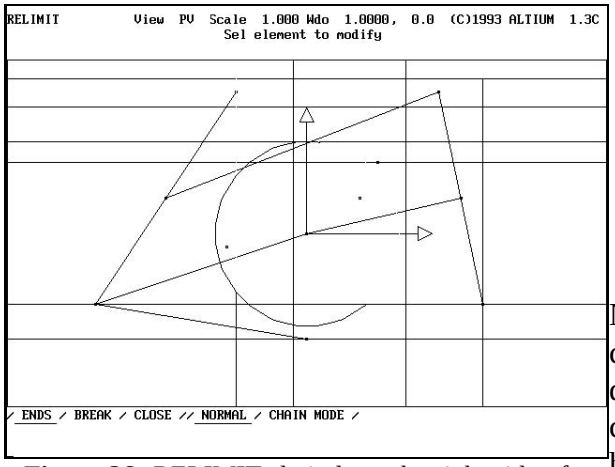

Figure 26 RELIMITed circle to the right side of a horizontal line.

Now we will RELIMIT the other end of the circle to a second line. SELECT the circle drawn at the origin, only this time SELECT it close to the 3 O'clock position but in the lower half. SELECT the intersecting horizontal line that goes through the circle near the bottom, but SELECT the line somewhere on the right side of the screen. (See figure 26).

If you want to take a break now or if you wish to explore FKey RELIMIT (or any other FKey for that matter), just FILE your drawing and then explore. When you are finished exploring and want to pick up where you have left off, just CALL the drawing and you will be ready to continue. Try drawing a couple of circles that intersect each other and relimit these circles to each other. Watch the program prompt area and remember to SELECT or INDICATE the relimited one the sides that you want altered. See the chapter on FKey RELIMIT (Chapter 15) for a more in-depth explanation of this useful FKey.

FKey CORNER:

This FKey appears on your popup menu as CN and on the side bar-menu as CNR. FKey CORNER allows you to CORNER two elements at a specific point. You can have a sharp corner, a corner with a radius on it, or you can have a corner with a CHAMFER on it.

SELECT FKey CORNER from your menu. SELECT the two lines as indicated in figure 27.

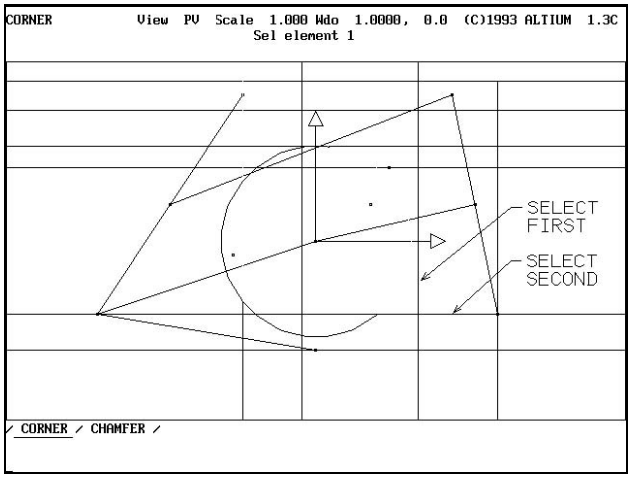

Figure 27 Lines to use for FKey CORNER.

You now have to tell the software which corner you wish to keep. There are four possible corners. By INDICATing which CORNER you want to keep, you allow the software to give you the desired results. Figure 28 shows a close up view of the two lines you have SELECTED and the four corners that are available. We will be using this method of naming "quadrants" as we go through the book.

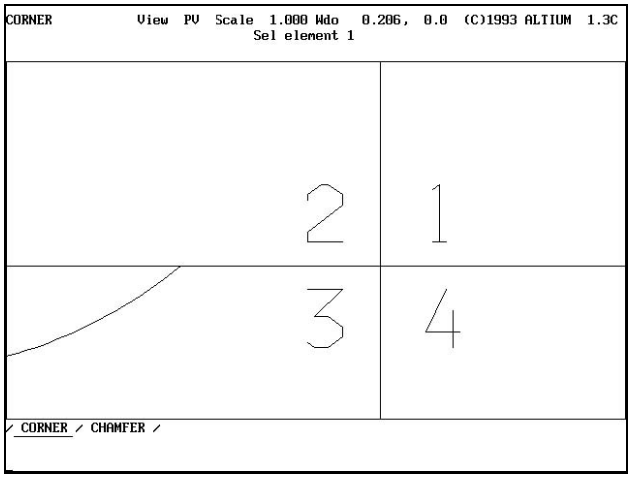

Figure 28 Quadrant names for FKey CORNER.

Move your cursor to the corner denoted by the number 1 and press the INDICATE button on your mouse. A corner appears to the right and above the intersection of the two lines. Press the YN button to restore both lines and INDICATE close to the number 2. Press the YN button to restore the lines to normal and repeat these actions to see the results of INDICATing in each of the four quadrants(see fig 29 for each possible corner).

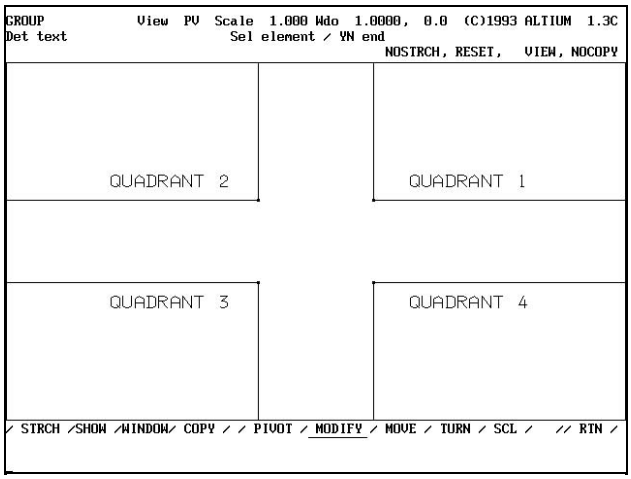

Figure 29 Possible corners available between 2 intersecting lines.

SELECT the horizontal line at the very top of your screen and SELECT the diagonal line just below it (see figure 30).

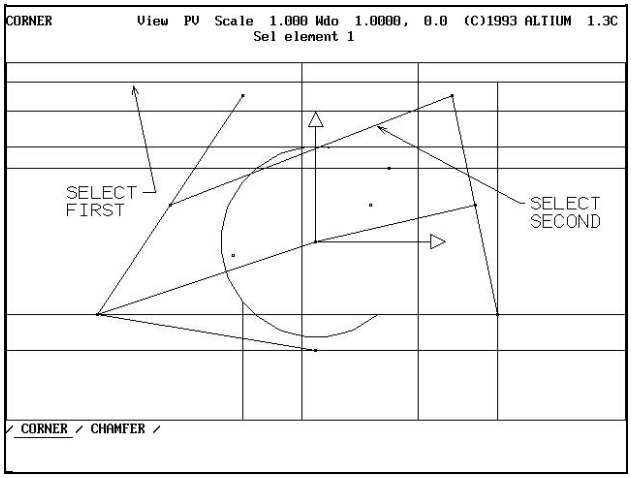

Figure 30 Lines to be SELECTed.

The program prompt allows you to "Key rad = 0.0000". This option works just like it did when you were drawing a circle. If you were to press the YN button, a radius of the value shown (in this case 0) would be used. This little feature becomes very handy. By looking at the screen, you can tell immediately what the default value would be should you need to put a radius on this corner. Since we want to put a ¼" radius on the this corner, you should type in the value 0.25. Notice the change in value on the screen in the program prompt area. INDICATE in the lower left corner (quadrant #3 - see fig 28 for numbers). Your screen should look like figure 31. If you made a mistake in INDICATing the incorrect quadrant, you can use the Y/N button to undo the corner and then INDICATE the one you really wanted.

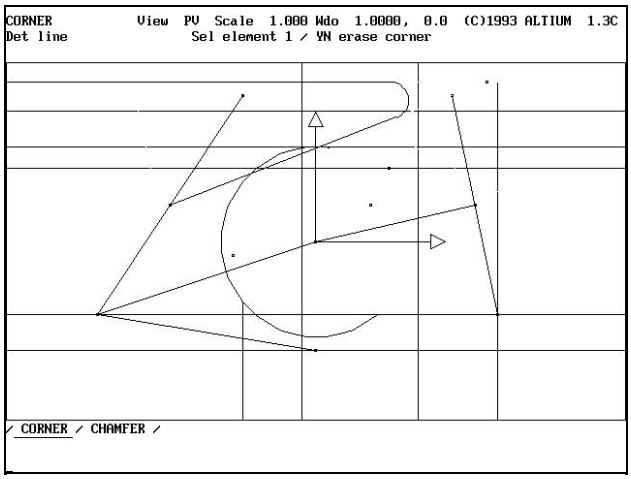

Figure 31 corner created using Quadrant #3 and a radius of 0.25.

SELECT the submenu item CORNER again. This forces the software to restart the function. Sometimes you may get so far with a task and realize what is happening is not what you want. By re-SELECting a menu item, you usually force the software to cancel everything that has happened and restore you to your original geometry. This little hint does not always hold true, but is something you can try if you have problems.

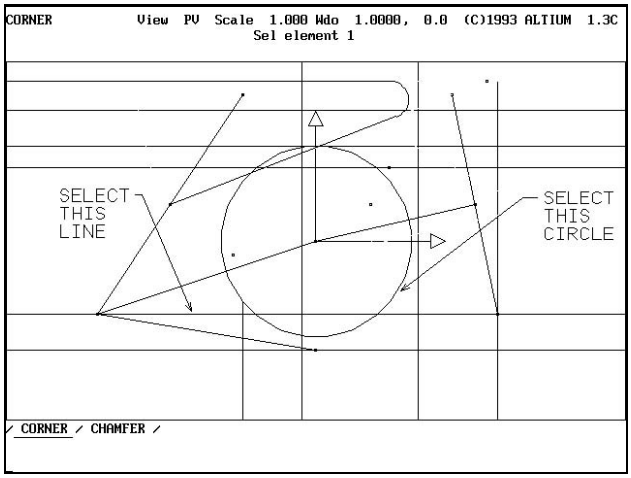

Figure 32 CIRCLE and LINE to be SELECTed.

SELECT FKey RELIMIT and CLOSE the circle. (SELECT submenu item CLOSE and SELECT the CIRCLE. The circle changes to a full circle). Now SELECT FKey CORNER again and then SELECT the circle and the line as noted in figure 32.

This action presents a bit of a problem. The line intersects the circle in 2 places. The CORNER that the software will use depends on *where* you INDICATE with the mouse. Key in the value 2.0 for a radius and hit enter. INDICATE in the lower right quadrant (#4) of the intersection of the circle and line on the right side of your screen. A radius appears between the line and the circle (see fig. 33).

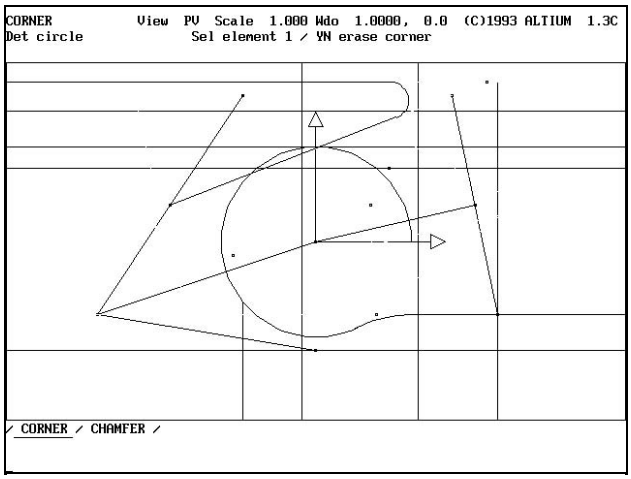

Figure 33 Corner a line and a circle with a 2.0 radius.

Again, if you wish to experiment, here are some actions to try. CORNER two lines but only adjust on of the lines. (Hint , look at the submenu items available after you have selected the two lines. Try submenu item TRIM #1 (this trims the first line you SELECTed but leaves the second SELECTed line unchanged). Try using the submenu items CONCAVE and PIGTAIL as well!!!!! Do not forget to FILE your drawing first so you can CALL it to start where you left off.

FKey GROUP:

FKey GROUP allows you to:

1) define a group of elements,
2) disband a group of elements,
3) MOVE, SCALE, TURN, MIRROR a group of elements.
4) add attributes to a group of element and
5) define & manipulate a set of elements using other FKeys

The FKey GROUP appears on your pop-up menu as GP and on the sidebar menu as GRP. When you first SELECT the FKey, submenu item ABORT is the default. This item allows you to disband any GROUP that may have been defined previously. It is a good habit to press the YN button if you are not sure that the previously defined GROUP has been disbanded. Press the YN button. Notice the line under ABORT has disappeared and the program prompt area now tells you to "Sel menu".

SELECT the submenu item TRANSL (short form for translate). Another series of submenu items now appears on your screen (see fig 34).

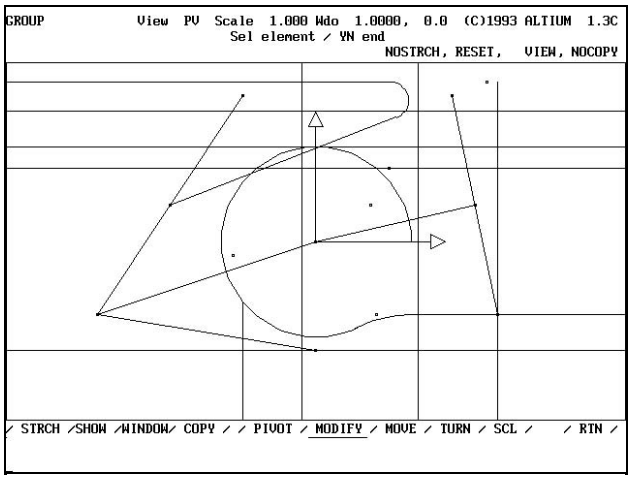

Figure 34 Menu item for FKey GROUP, sub-menu item /TRANS/.

MODIFY is the submenu item that is active. MODIFY allows you to add or subtract elements from a group. Since you have not previously TRAPped a group (more on TRAPping elements a little later), no elements are highlighted. SELECT the 4 vertical lines that appear on your screen. As soon as you SELECT an element it's color changes to highlight it and the program prompt area changes to say "Sel element / YN end". Press the YN button to tell the software you have finished defining the GROUP. Submenu item PIVOT now becomes highlighted and the program prompt area says "Sel pivot element / YN use origin". Press the YN button to use the origin as the PIVOT. By SELECTing a pivot, we tell the software how to grab the elements SELECTed and MOVE, TURN, or SCALE them. The program now prompts us to " Key DX,DY / Key DX = 0.0 / Ind DX / Sel pt or ln". DX is a mathematical short form for "the Change in X or Delta X". MICRO CADAM automatically assumes you want to move your elements a certain distance with respect to the element you choose as the PIVOT (in this case the ORIGIN). Using the keyboard, type in 0.5,0.1 and hit enter. The 4 lines have moved .5 units to the right and .1 units up. The 4 lines are still highlighted. This means you have an active group that you may still manipulate in any way you deem necessary. By pressing the YN button again we could move the 4 lines another .5 units to the right and .25 units up (notice the program prompt area says YN same DX,DY). SELECT the submenu item EXIT to disband the group. Your screen should look like figure 35.

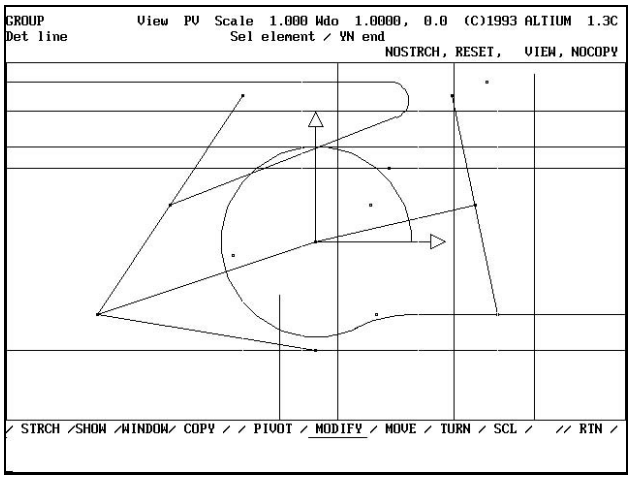

Figure 35 The four lines after being moved 0.5 units to the right and 0.1 units up.

We will now show you how to scale an element. SELECT the circle that you RELIMITED previously. Press the YN button to tell the program that this is the only element you want to

SCALE. Instead of using the origin as our pivot, we will use the circle we have just SELECTED. SELECT the highlighted circle. The software tells you that it "Det circle" (DETected a CIRCLE as the SELECTed element). MICRO CADAM uses the center of the circle as the PIVOT point. SELECT the submenu item SCL (short from for SCALE). Make sure the submenu item SCL is underlined. We can now key in the amount we wish to SCALE this circle. Let's make this circle 1.6 times it's original size. Key in the value 1.6 and hit enter. If we did not like the result, we can change the size of the circle back by keying in the value 1/1.6. Try it.

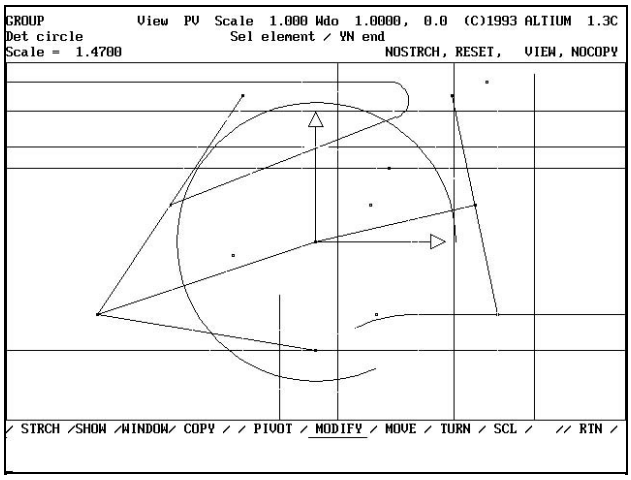

Figure 36 Circle scaled 1.47 times larger.

Now key in the value 1.47. SELECT the submenu item EXIT to disband the group. Your screen should look like fig.36. FILE your drawing. NOTE: Press your F3 key on the keyboard to periodically redraw the screen.

Use FKey SHOW to ERASE all the horizontal and vertical unlimited length lines on your screen. Do not ERASE any of the lines that you have RELIMITED or CORNERED. Compare what is on your screen to figure 37 to be sure you have erased the correct lines.

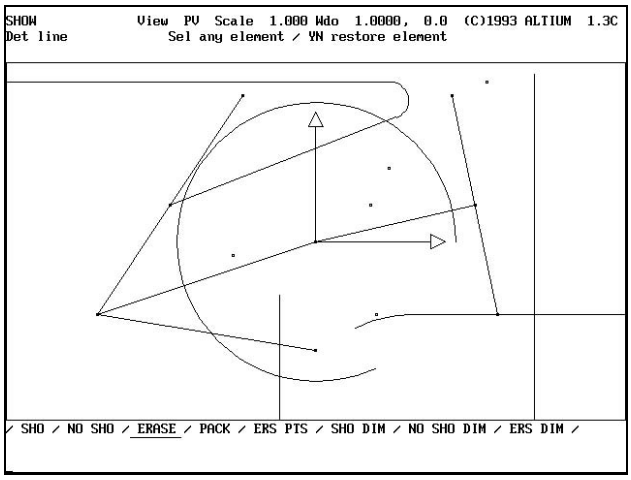

Figure 37 Display with requires lines erased using FKey SHOW, sub-menu item /ERASE/.

SELECT FKey GROUP and submenu item TRANSL. SELECT the two lines and one circle as shown in figure 38.

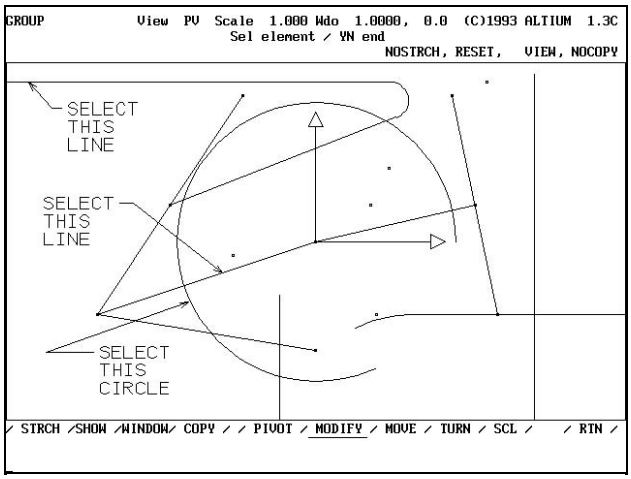

Figure 38 The two lines and the circle that are to be SELECTed.

Press the YN button on your mouse to accept these elements as your group and press YN again to use the origin as your PIVOT element. SELECT the submenu item TURN. Key in the value 44 and press enter to turn the objects 44 degrees counter clockwise. Press the YN button to TURN the elements 44 degrees more. Press the YN button 2 more times and then SELECT the submenu item MOVE. The elements remain highlighted. Key in the value -2,.25 and hit enter. Disband the group by SELECTING EXIT at the bottom of the screen. Your drawing should look like fig. 39. FILE your drawing.

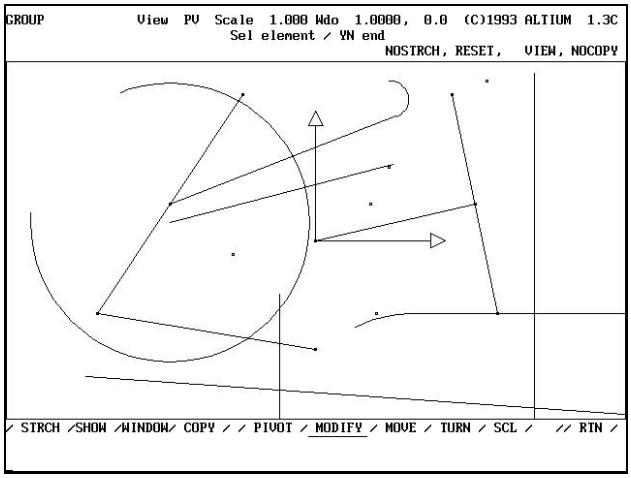

Figure 39 Rotating and moving the two lines and the circle.

SELECT the submenu item RTN to get back to the main FKey GROUP menu. SELECT the menu item MIRROR. The program prompts you to "Sel mirror line 1". SELECT the short vertical line in the bottom center of the screen (see fig 40).

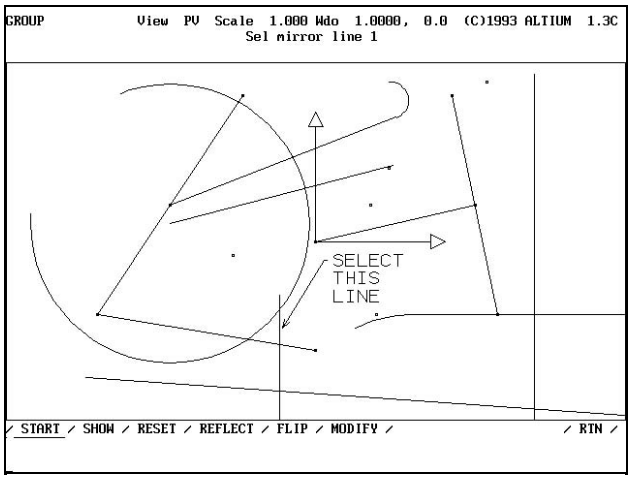

Figure 40 Mirror line number 1.

SELECT the large circle, the small radius at the top of the screen, and finally SELECT the line that has one point at the origin. SELECT the submenu item FLIP. What you have done is told the software the line you wish to use as the mirror line, the elements you wish to mirror and whether you want to erase the original elements (submenu item FLIP) or leave the original elements and create new ones that are a mirror image of the originals(submenu item REFLECT). Check figure 41 to make sure you have done the exercise correctly. If you have not, just CALL the drawing using FKey FILE and try again.

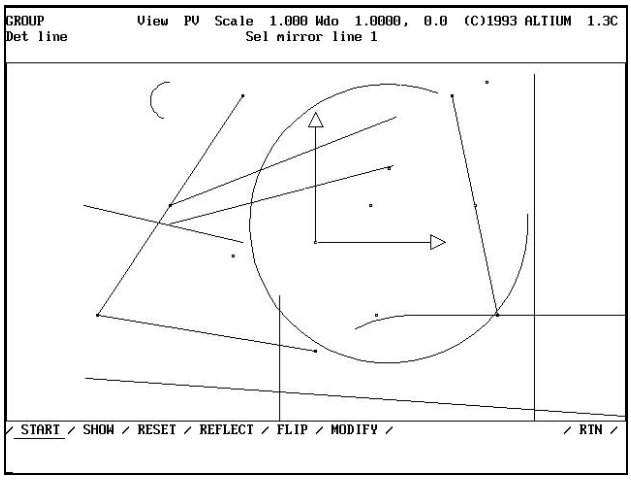

Figure 41 Result of MIRROR.

START allows you to do another MIRROR operation with different elements. SHOW displays only the elements you have selected to use mirror with. RESET resets your display to show all the elements (for use after you have used submenu SHOW). REFLECT leaves the original geometry in place while FLIP deletes the original geometry. MODIFY allows you to add or subtract elements from a previously defined GROUP. Experiment with FKey GROUP/MIRROR. there are many possibilities including the capabilities of doing a double mirror operation in one step. (Note the program prompt "YN mirror line 2").

You can define a group using the FKey GROUP submenu item TRAP. This submenu item

allows you to TRAP a group of elements a number of different ways. You can trap using an irregular polygon, a rectangle, or you can tell the software to trap everything that is or is not displayed in the current WINDOW.

CALL your previously saved drawing. SELECT the FKey GROUP and then SELECT the submenu item TRAP. INDICATE with your mouse approximate points in the top left, bottom left, bottom right and top right corners of your screen. MICRO CADAM should draw some lines that look like fig 42.

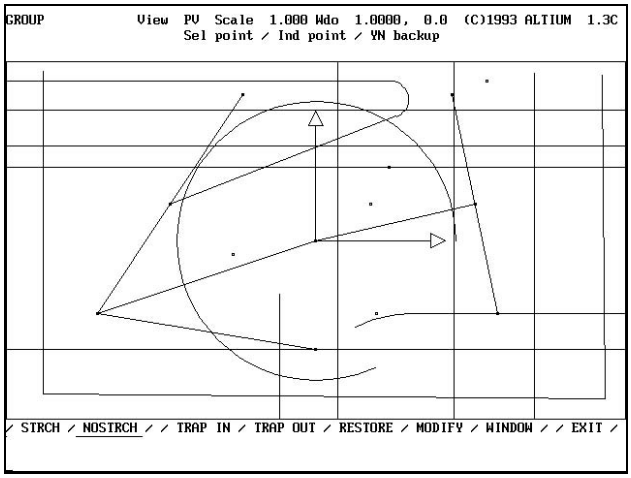

Figure 42 Using FKey GROUP, sub-menu item /TRAP/.

SELECT the submenu item TRAP IN. MICRO CADAM changes the display momentarily to show you all the elements that would make up your group. SELECT the menu item RESTORE to bring back your screen. SELECT /RTN/ to get back to the first GROUP menu and then SELECT TRANSL. All the items that were TRAPPED should now appear highlighted on your screen. Notice that the ORIGIN symbol does not change color. Your ORIGIN is not affected by a GROUP SELECTION. All the elements on your screen should be highlighted. If some are not, SELECT them so they all are highlighted. Press the YN button twice to accept the group and to use the origin as the PIVOT. Move the group of elements 1 unit to the left by keying in the values -1,0. SELECT the submenu item EXIT and then compare your screen with figure 43.

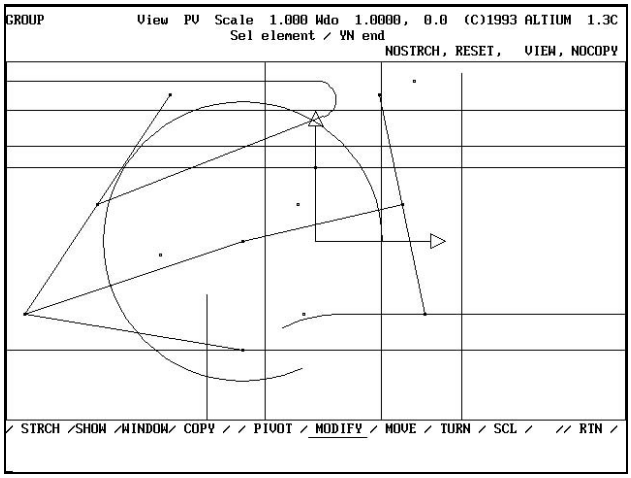

Figure 43 Result of moving the GROUP TRAP elements -1,0 units.

SELECT the menu item RTN to return to the first GROUP menu and then SELECT submenu

item TRAP. If you were to SELECT sub menu item WINDOW and then TRAP IN you would be able to make a group of all the elements displayed on screen. If you pressed the YN button, you would be able to establish a group of elements using a rectangle defined by INDICATING or SELECTING the corners of a rectangle. For all the uses of these and other submenu items, look in the reference section of the book (FKey GROUP in Chapter 18) for more information. FILE your drawing and then experiment with the power that FKey GROUP gives. When you are ready to continue, just CALL your drawing and you will be right where you left off.

FKey TYPE:

FKey TYPE controls the way your elements are displayed. You can change the color, the line type and line weight. SELECT FKey TYPE (TY on the pop-up menu, TYP on the side bar) and then SELECT submenu item COLOR (see fig. 44).

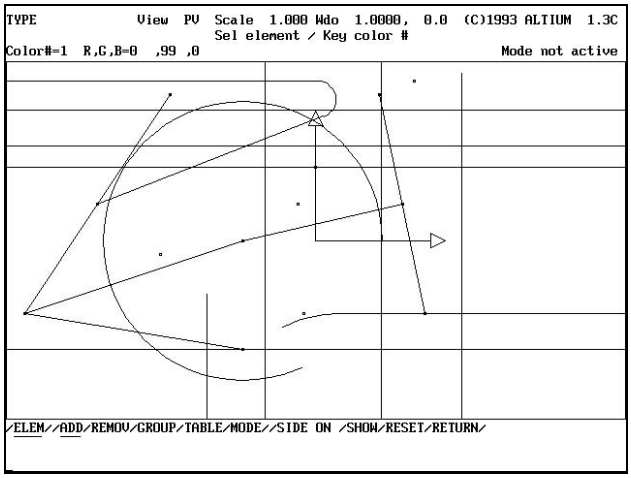

Figure 44 FKey TYPE sub-menu item /COLOR/.

The default menu items are /ELEM/ and /ADD/. MICRO CADAM assumes that you wish to ADD a COLOR to an element or a GROUP of elements when you first use this menu item. The sub menu item /REMOV/ resets an element or group of element colors to the default color (usually white but this can be changed). Sub menu item /GROUP/ lets the user add all the elements in the drawing with a specific color into a temporary group. /TABLE/ allows you to get a color table from another drawing and make it the color table for this drawing. /MODE/ is a command to make all elements created, (after MODE is turned ON), to be of a specific color.

SELECT the submenu item /SIDE ON/. A color table appears on the right side of your screen. This is the default color table for MICRO CADAM Cornerstone. The color number is on the left side of the color chart, and the palette number is on the right. By SELECTing the number of the color you wish to change, and SELECTing on the UP or DOWN text in the middle part of the color side-bar, you can change the displayed color for a given color number. You are able to have 11 colors active at any given time from a palette of 64 (numbered 0 through 63).

SELECT the submenu item SIDE OFF to remove the color table. Submenu item SHOW

makes MICRO CADAM display only the elements that have the current color number attached to it. The screen tells you which color number is current. In this case, the screen says color#=1 R,G,B=0 ,99 ,0. R, G, and B stand for the amount of red, blue and green in color number 1(or whatever COLOR NUMBER is current). RESET restores your display after you had SELECTED SHOW. RETURN restores the original FKey TYPE menu.

With the Color submenu active and /ADD/ as the default menu item, SELECT the four full horizontal lines on your screen. All four lines should appear in the color green which is mode #1. Key in the number 2 and hit enter. Notice the screen now tells you the color number that is current is now "=2, R,G,B=0 ,99, 99". Select the large circle. The circle should be a light blue color. Make all the other white lines (Quantity of 11) the color number 3 by typing 3 and hitting enter and then SELECTing all 11 lines. SELECT the sub menu item GROUP and SELECT one of the green horizontal lines (color mode #1). MICRO CADAM Cornerstone temporarily displays all the elements that are shown in the current window that have the color #1 (green). The program prompt area asks you to press the YN button if you wish to make a GROUP of these elements. Press the YN button to accept these four lines as a group.

> NOTE: Using this technique of GROUPING by Color can sometimes have mixed results. This procedure makes a GROUP of all the elements in the drawing that have the SELECTED color, even if they are not shown in the currently displayed WINDOW !!!!

In the information line of the screen (see CONCEPTS section in Chapter 6 for the location of this line), MICRO CADAM Cornerstone tells you that " # grouped = 4". Therefore you immediately know only the four lines were GROUPED. SELECT the submenu item ADD and then key in the number 5 and press enter. The program prompt area gives you an option of pressing the YN button to ADD this color to the GROUP. Press YN to change the color of the four lines to color #5 (magenta). FILE your drawing under the name "RANDOM POINTS,3". CALL the drawing called RANDOM POINTS,2 to bring back a copy of the drawing that has all the elements in the color white.

SELECT the FKey TYPE. This FKey has a "sticky" quality to it. If the last time you used FKey TYPE was for applying colors to elements, then the next time you SELECT FKey TYPE you will automatically be in the Color submenu. SELECT RETURN to restore the first FKey TYPE menu and then SELECT the menu item STYLE. Check your screen with figure 45.

Since MICRO CADAM draws it's lines with a line type of SOLID, the STYLE submenu defaults to the next most common line type used - DASHED. SELECT all four of the full horizontal lines on your screen. All the lines changed from a solid line to a dashed line. By pressing the YN button you can RESTORE the previously SELECTED element to it's original state.

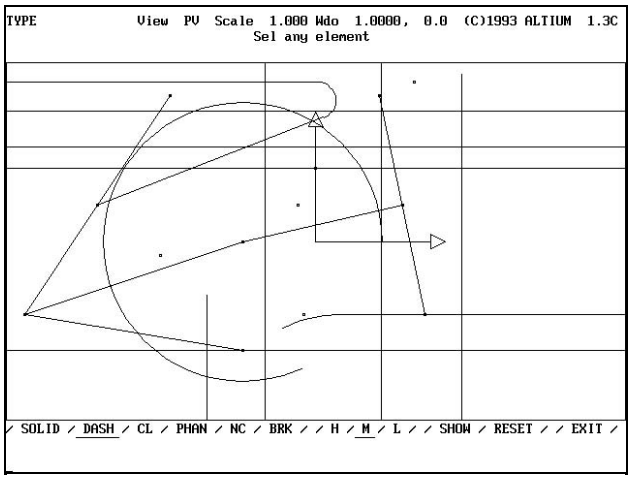

Figure 45 FKey TYPE sub-menu item /STYLE/.

NOTE: Using this method, you may only restore the last element you SELECTED. If you need to restore an element that was changed previously, you will have to SELECT the line style that you wanted the element to be, from the STYLE menu, and then RE-SELECT the element to restore it .

FILE your drawing (drawing name "RANDOM POINTS,2") with the four lines as dashed and then experiment with the different line styles available (see figure 46).

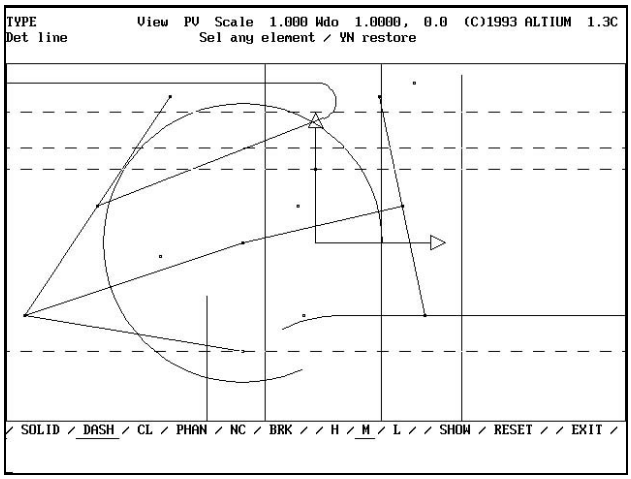

Figure 46 Current screen with four lines changed to dashed.

FKey DIMENSION:

MICRO CADAM Cornerstone allows you to add dimensions to your drawings using one of two dimensioning standards called "STANDARD" and " ISO". You SELECT which standard you wish active using FKey FILE and submenu item UNITS.

SELECT FKey FILE and START a new drawing. Call the new drawing DIMENSION,TEST. SELECT the submenu item UNITS and change the active dimension standard to ISO by SELECTING the text ISO. An " * " should appear beside ISO if you have SELECTED it properly. (If you want to set ISO permanently, see the MCOPT section in Chapter 1). Press the YN button to return your drawing to the screen. SELECT FKey LINE. SELECT submenu item VERT and make sure UNLIM is underlined. Key in the following numbers, hitting the enter key after each one: 1, 1.5, -2,-1.46. SELECT the submenu item HORIZ to draw unlimited horizontal lines. Key in the following numbers, hitting the enter key after each one: .75, 1.8, -2.2, and -.43.

SELECT the FKey DIMENSION from your menu (DM on the pop-up, DIM on the side bar menu). Compare your screen with fig 47.

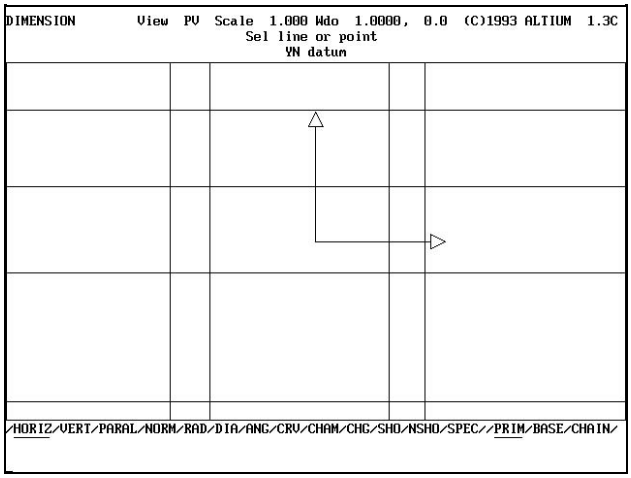

Figure 47 FKey DIMENSION with required lines drawn.

When you first SELECT FKey DIMENSION, the system defaults to HORIZ and PRIM submenu items. This is short for HORIZONTAL and PRIMARY. SELECT the vertical line at far left of your screen and then SELECT the vertical line at the far right of your screen. KEY in the number 3 (for 3 decimal places - see program prompt area) and INDICATE with your mouse anywhere on the drawing screen. SELECT the submenu item RTN to complete the dimension.
SELECT the submenu item VERT to dimension the vertical distance between 2 parallel horizontal lines. SELECT the horizontal line at top of the screen and SELECT the horizontal line at the bottom. This time, INDICATE somewhere on the right side of the screen. The text part of the dimension has a line running through it. Because the dimension you have just drawn is highlighted (the color green on a VGA screen), you are still able to adjust the dimension to suit your needs. INDICATE somewhere halfway in between 2 of the horizontal lines. Wherever you INDICATE is where the center of the dimension text will be. If you INDICATED incorrectly, you may still change the location of the dimension text by INDICATING a new location. As long as the dimension is highlighted, you can modify it.

Once you are satisfied with the location of the text, SELECT RTN to accept the dimension (see fig 48).

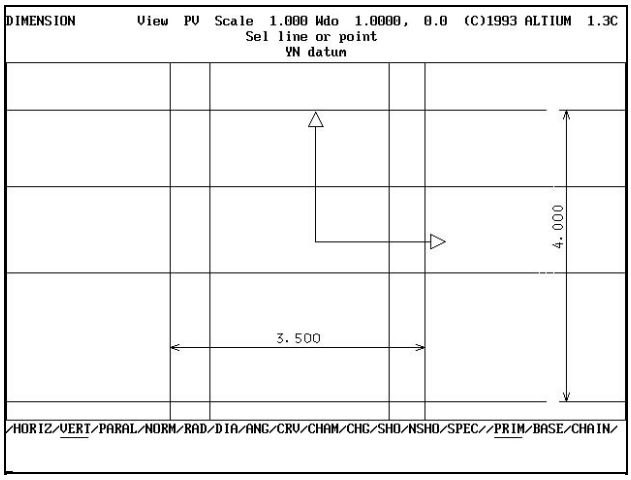

Figure 48 Screen with horizontal and vertical dimensions in place.

FILE this drawing under the name DIMENSION, TEST and then CALL the drawing RANDOM POINTS,2. SELECT the submenu item UNITS and make ISO the active dimension standard. Press the YN button to restore the drawing screen.

Change your window size to 1.5 by SELECTING FKey WINDOW, and keying in the value 1.5. Your screen should look like fig 49.

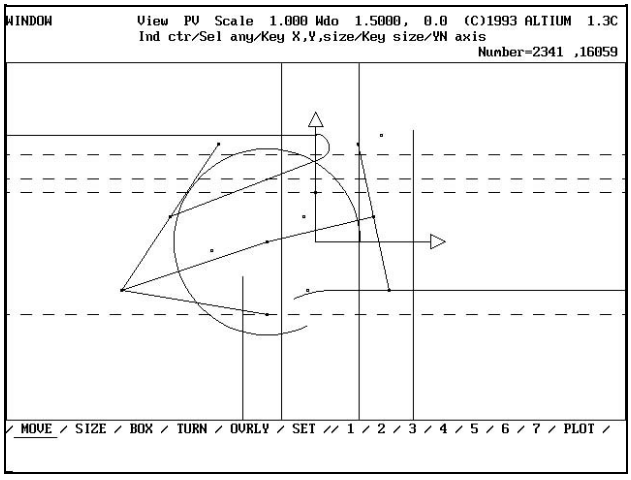

Figure 49 WINDOW size 1.5

Note that the top center of your screen now says "Wdo 1.5000".

SELECT FKey DIMENSION. This time, we will dimension the diameter of a circle. SELECT the submenu item DIA. (You will know it is SELECTED or active when it is underlined). SELECT the large circle in the center of the screen. INDICATE near the center of the circle. You can RE-INDICATE the location of the text as many times as you wish. Try and get your dimension to look like the one in fig 50. by INDICATING, as often as you require, the

location of the dimension text. SELECT submenu /RTN/ when you are finished with this dimension.

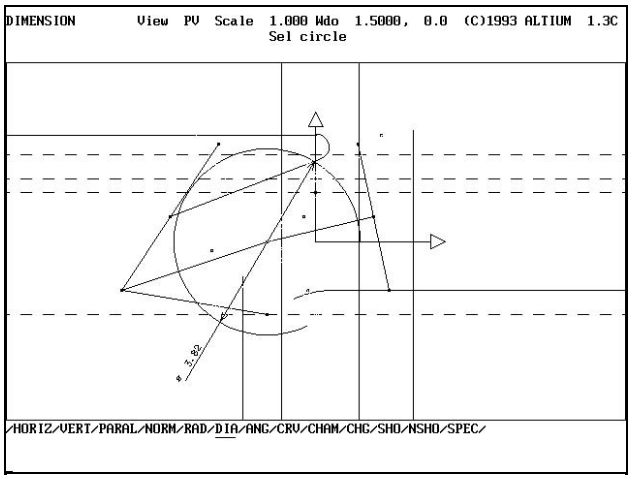

Figure 50 Diameter of a circle dimensioned.

SELECT the submenu item RAD to dimension the radius of a circle. SELECT the small radius near the Y arrow of the origin symbol and INDICATE the location of the dimension text to approximately the spot shown in figure 51. FILE this drawing.

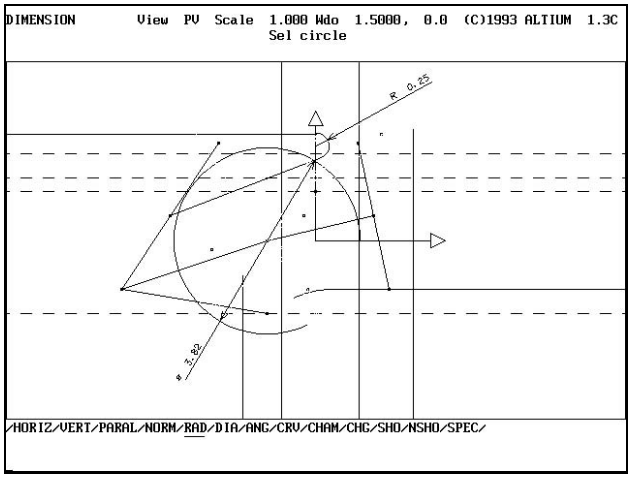

Figure 51 RADIUS dimension in place.

FKey NOTE and FKey SYMBOL for adding text to your drawings:

FKey NOTE allows you to annotate your drawings. You can add text one string at a time or, GENERATE a series of text strings. You can quickly and easily MOVE, COPY, EDIT, JUSTIFY, FIT, and change the SIZE of a note. You can control the PARAMETERS (PARMS), the insertion point POSITION (POSN) of the text you create and how the NOTES in your drawing are displayed (DISP). For complete explanations of all the capabilities of this MICRO CADAM Cornerstone's text handling capabilities, see the FKey DIMENSION in Chapter 23.

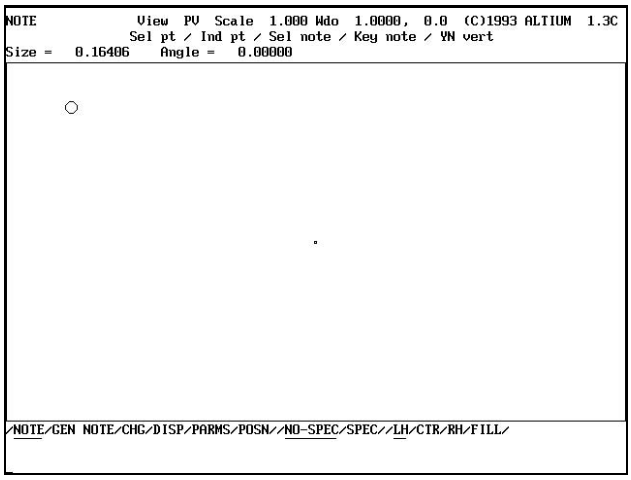

Figure 52 Screen showing indicated position for the start of the NOTE.

START a new drawing and call it NOTE,TEST and press the YN button to remove the axis block. SELECT FKey NOTE (NT on the pop-up menu, NTE on the sidebar menu). INDICATE in the top left corner of your drawing (see fig. 52).

MICRO CADAM uses a small circle to denote the starting position of your text string. The program prompt area has an option asking you to " Key note". Type in the following and hit ENTER: " THIS IS TEXT STRING #1". Congratulations, you have just created your first MICRO CADAM note. SELECT the point that appeared at the origin after you had YN removed the axis block. SELECT the text you had just keyed in before. MICRO CADAM automatically detects the type of element you SELECTED and assumes you want the new text to be the same as the text you just SELECTED. This little feature of MICRO CADAM Cornerstone can save you a lot of typing as we will see in the next exercise!!!!

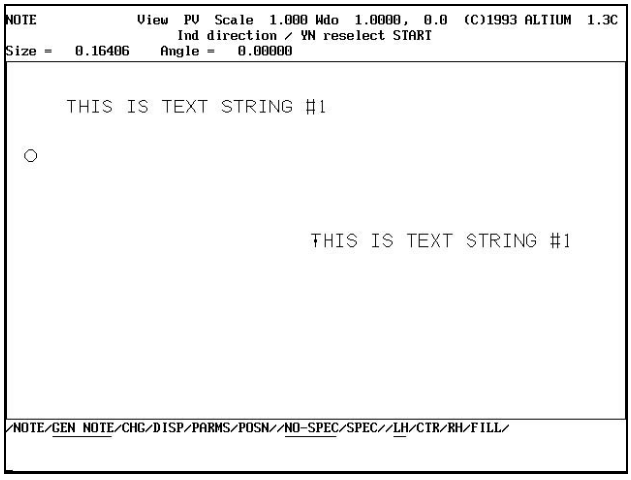

Figure 53 Location of beginning of a GENERATED NOTE.

SELECT the submenu item GEN NOTE (GENerate NOTE). INDICATE just below the first NOTE you created, and as far to the left of the screen as possible (see fig 53.)

INDICATE below and to the right of the circle. What this tells the software is the direction you want the note to compose to. In this example, we want the note to go from top to bottom. SELECT the NOTE at the origin. SELECT this same note four more times such that your screen looks like figure 54.

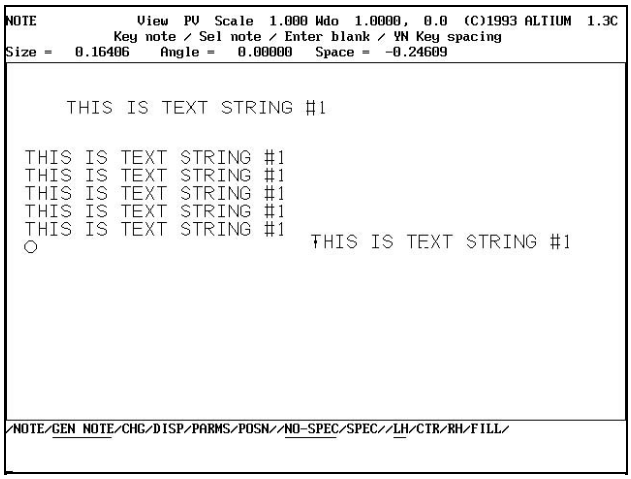

Figure 54 Result of SELECTing the NOTE at the origin 5 times.

SELECT the submenu item CHG (CHanGe). SELECT the second note in the series of NOTES you just created. The NOTE becomes highlighted on your screen (color green) and the text of the NOTE appears in the bottom of the screen. You can use typical word processing keystrokes to EDIT the NOTE. Press the END key on your keyboard. The cursor (the little white line that appears under the letter T in the bottom left corner of the screen) moves to the end of the NOTE. Press the BACKSPACE key (or back arrow key) on your keyboard to erase the number 1. Key in the number 2 and press enter. The Note should change to read " THIS IS TEXT STRING #2". SELECT the third note. Again, press the END key on your keyboard. This time, use the left arrow key (number 4 on you numeric keypad) to move the cursor such that it is under the number 1. Type in the number 3 and hit enter. Now do the same for the fourth line. Change the NOTE to read " THIS IS TEXT STRING #4". SELECT the last NOTE in the series. This time, move the cursor using the right arrow key of your keyboard such that it is under the first "T" of "TEXT". Press the INSERT key of your keyboard. The cursor should change to the color green. This allows you to INSERT text into your NOTE without overwriting the existing text. Type in the words "THE LAST " (DON’T FORGET THE SPACE). Move the cursor using the right arrow key of your keyboard until it is under the "#". Press the DELETE key of your keyboard until both the "#" and the "1" are deleted. Press the ENTER key of your keyboard. Your screen should look like fig. 55.

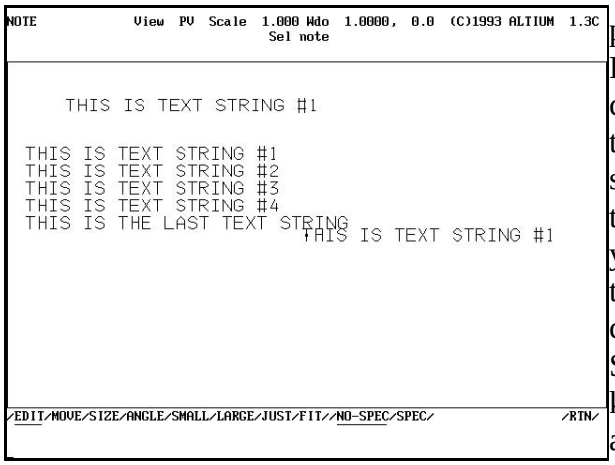

Figure 55 GENERATED NOTE showing all the EDITing required.

You do not need to use the submenu GEN NOTE to produce a NOTE that consists of more

than 1 line. In MICRO CADAM Cornerstone the $ acts like a carriage return would on a typewriter. It forces the text of the NOTE you are creating to go the next line. SELECT the submenu item RTN (for ReTurN) to get back to the main menu of FKey NOTE. INDICATE in the lower left hand side of your screen. Type in the following text: "THIS DEMONSTRATES THE FUNCTION OF THE DOLLAR SIGN$ IN MICROCADAM CORNERSTONE.", and press the enter key. If the note runs off the screen, just SELECT the note and INDICATE a new position and hit ENTER on your computer's keyboard. (See figure 56).

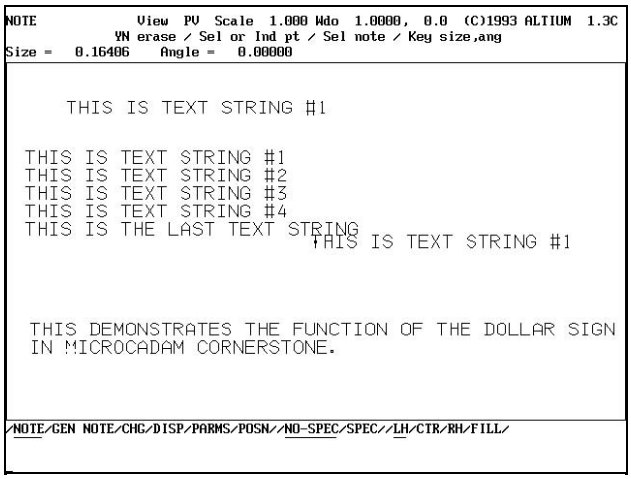

Figure 56 The use of the $ in MICRO CADAM.

File your drawing using FKey FILE.

To display a dollar sign, precede it with a "\". For example, to display the note "TOTAL MONEY = $1,000.00" , you would enter the following: **TOTAL MONEY = \$1,000.00.**

Experiment with FKey NOTE. SELECT submenu item CHG and see how you can manipulate the notes on the screen. SELECT submenu item SIZE, SELECT a NOTE, and key in a value such as .596. Change the ANGLE of a note. Make a NOTE FIT between 2 INDICATED points. Always look at the program prompt area if you need help deciding what to do next.

Experiment with some of the other FKey's in MICRO CADAM. Try drawing splines (SP on the pop-up menu, SPL on the sidebar). Add CHAMFERS to different corners. Explore FKey OFFSET (OF on the pop-up menu, OFF on the sidebar) and see how you can offset circles, splines, lines and other geometry.

THE QUICKSTART DRAWING EXERCISE :

This section of the book will get you applying some of the functions you have learned previously, and introduce some concepts that apply when producing actual working drawings. We will be drawing all of the top or Primary View (VIEW PV) and part of the Front View (VIEW FV) to get an idea of how MICRO CADAM Cornerstone uses existing geometry to create the views required. Then we will be using an pre-drawn model to generate all of the Isometric View (VIEW IS). Figure 57 shows a close-up of the swing arm that we will be working with, while figure 1 at the beginning of this QUICK START section shows the completed drawing.

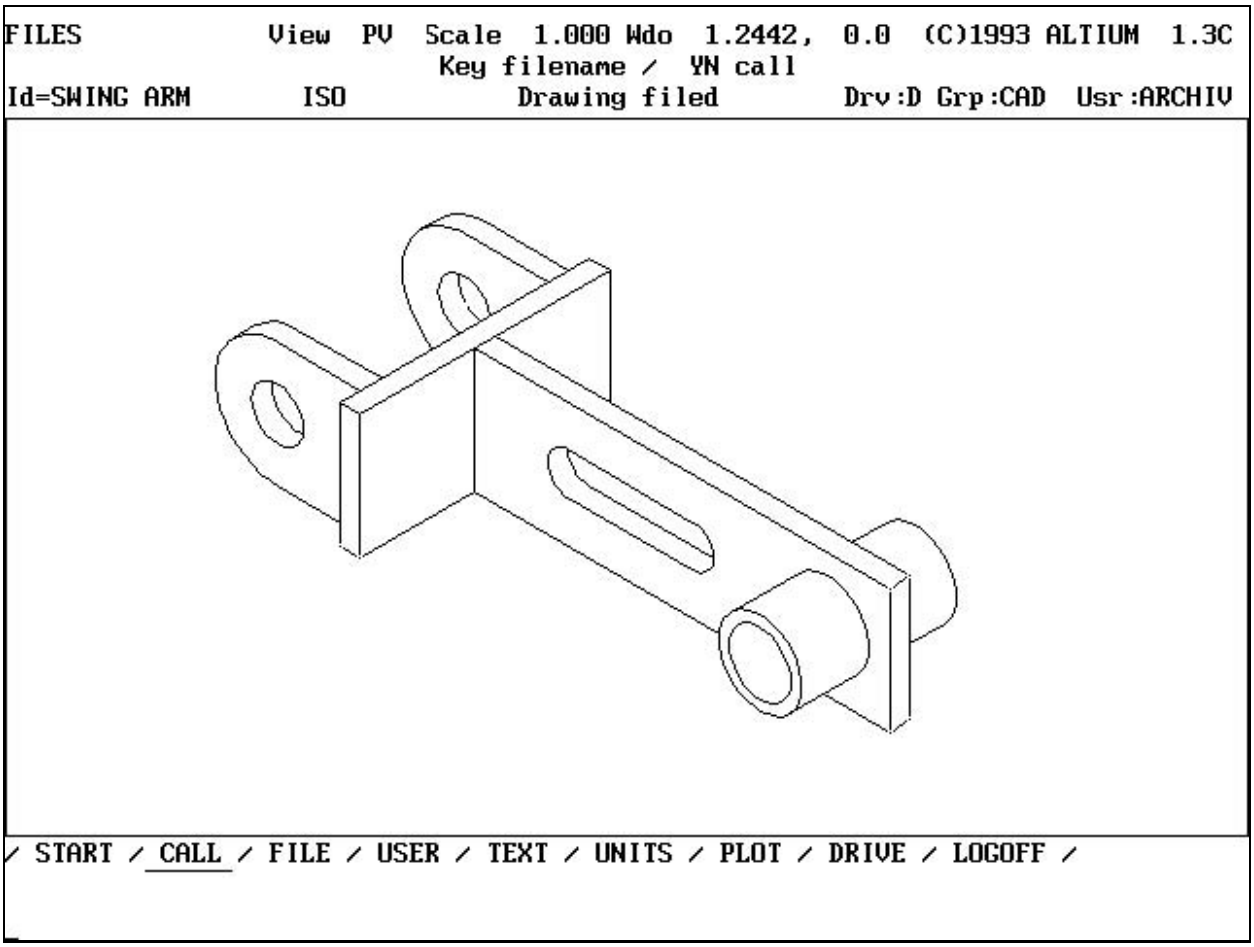

Figure 57 Isometric view of the Swing Arm.

Part 1 - Drawing the Primary View (VIEW PV) and Front View (VIEW FR)

If you are not already in MICRO CADAM Cornerstone, load the software either from the ALTIUM supplied menu or key in the following series of commands at the DOS prompt.

D:	(the drive you installed the software on)
cd \MCADAM	(change to the MCADAM sub-directory)
MCADAM	(the command to run MICRO CADAM Cornerstone)

When you get the opening screen, key in CAD,QSTART as the group,user. SELECT the submenu item START and key in SWING ARM,XXX (don't forget the comma) where XXX are your initials. Press the YN button on your mouse (or press the keyboard F2 key) to remove the axis block. SELECT the submenu item /UNITS/ and make sure ISO is the active dimension type. Press the Y/N button on your mouse (keyboard Function key F2) to return to the drawing screen. Notice that the active view is PV (Primary View). We will be drawing some of the geometry in this view, establishing a front view (view FR) and then using the 2 1/2D capabilities of MICRO CADAM to finish all the geometry.

First, draw an unlimited horizontal and an unlimited vertical line through the origin 0,0. SELECT the FKey LINE from your menu and then SELECT the point that replaced the axis block. Notice that FKEy LINE defaults to /HORIZONTAL/ and /UNLIM/ when you first start a drawing, however it "sticks" to the settings that you last used when you changed to a different FKey. SELECT the submenu item /VERT/ and SELECT the point at the origin. Your screen should look like figure 58.

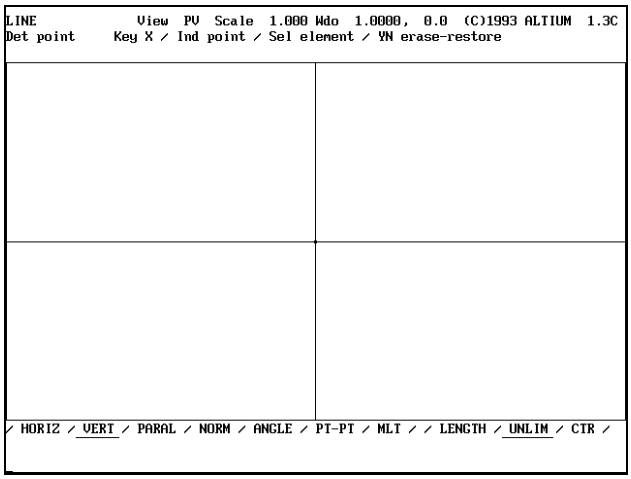

Figure 58 Horizontal and Vertical lines through the origin.

SELECT FKey OFFSET and SELECT the vertical line. INDICATE to the left side of the vertical line.Key in the value 0.75 and press return. SELECT the vertical line again but INDICATE to the right side this time. OFFSET this line by a value of 1.0. Now OFFSET the last line drawn .25 to the right. See figure 59 to

see how your screen should appear.

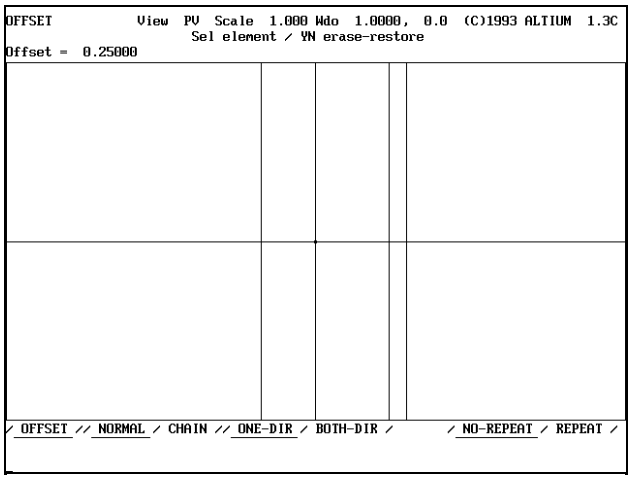

Figure 59 OFFSET vertical lines.

You are still in FKey OFFSET. SELECT the horizontal line and INDICATE above it. Key in the value 1.25 and press enter. SELECT this new line and INDICATE below it. Use the value 0.25 for the OFFSET. Compare your screen with figure 60.

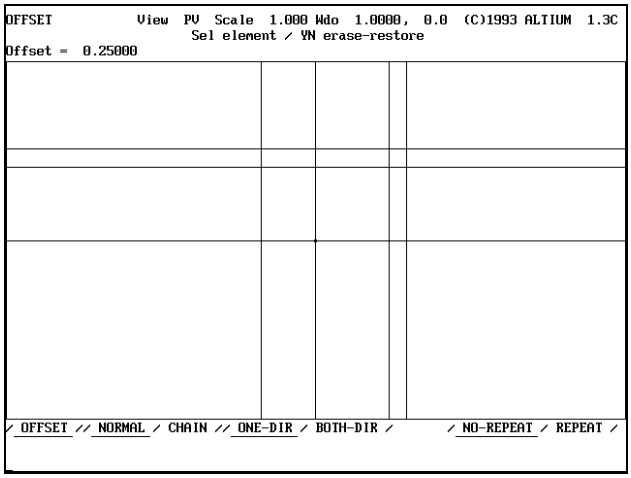

Figure 60 OFFSET horizontal lines.

We will now RELIMIT all the VERTICAL lines to the HORIZONTAL line going through the origin. SELECT FKey GROUP. Press the Y/N button to ABORT any GROUP that may be defined. SELECT the submenu item /TRAP/. INDICATE in the lower left of your screen. INDICATE in the lower right corner of the screen. A line should appear going left to right, crossing the four vertical lines. (See figure 61).

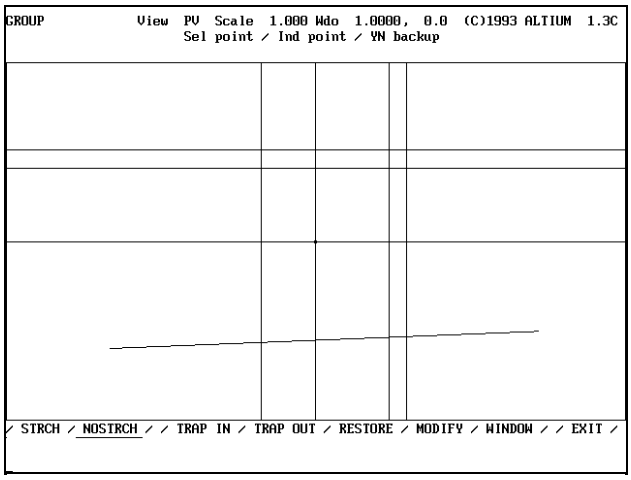

Figure 61 Line for trapping the four vertical lines.

SELECT the submenu item /TRAP IN/. Your screen should change to show only the four vertical lines. If there are any of the horizontal lines showing, SELECT the submenu item /MODIFY/ and SELECT the lines that should not be shown. If the four lines are now displayed, SELECT the submenu item /RESTORE/ and your screen will change to show all the lines you have drawn. SELECT the FKey RELIMIT and SELECT the submenu item /GROUP MODE/. MICRO CADAM prompts you to "Ind end". The software wants you to tell it which end of the group of lines you want to relimit. INDICATE below the horizontal line going through the origin. The software prompts you to "Sel intersecting element". SELECT the horizontal line at the origin. All the lines should relimit to the horizontal line you just SELECTed. (See figure 62.)

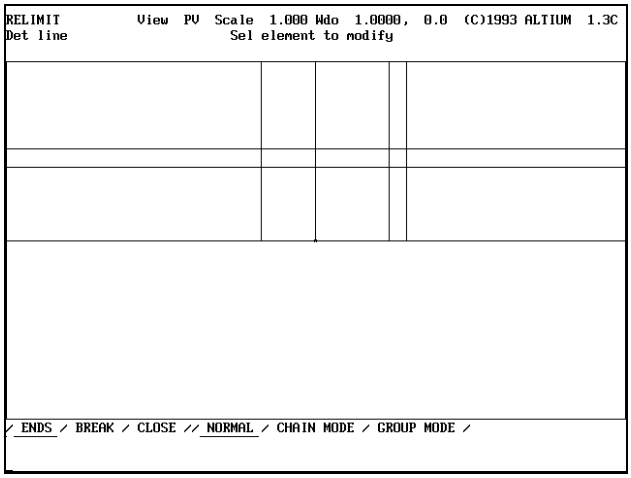

Figure 62 Four vertical lines relimited.

WE WILL NOW ESTABLISH THE FRONT VIEW OF THE SWING ARM USING THE GEOMETRY IN VIEW PV. For more information on Auxiliary views and how they work, see FKey AUXVIEW in Chapter 25 in the book for a more in-depth explanation.

SELECT FKEy POINT submenu item /DEF PTS/. MICRO CADAM prompts you to " Sel any element". SELECT the three vertical lines that do not have a points on their ends. FILE this drawing under the name you gave it earlier.

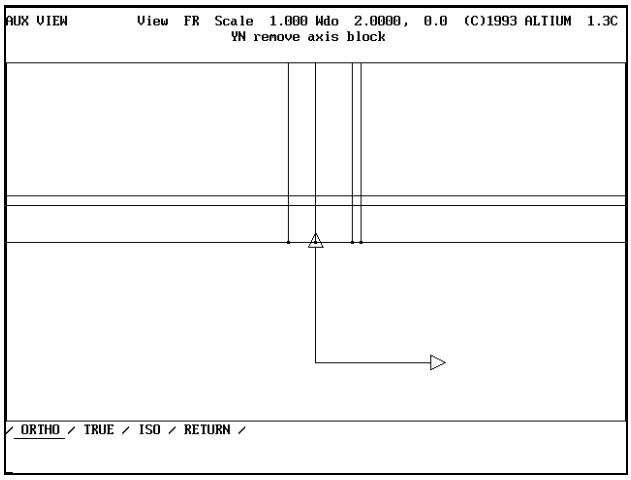

Figure 63 Axis block for AUX VIEW FR.

SELECT the FKEy AUXILIARY VIEW (AV on the pop-up menu, AUX on the sidebar menu). There is no default active submenu item when you have only one AUXILIARY VIEW in a drawing. SELECT the submenu item /START/. The menu area changes and shows /ORTHO/ as the default. SELECT the vertical line that ends at the origin. The program prompts you to "Sel point". SELECT the point at the origin. Move your cursor away from any element and press the SELECT and INDICATE buttons at the same time to toggle to FKey WINDOW. Key in the value 2 and press the SELECT and INDICATE buttons to toggle back to FKey AUX VIEW. INDICATE with the mouse approximately one inch up from the bottom of your screen. Press the Y/N button to accept the value of 1 for the scale of the new view. Key in the letters FR and press enter to give this AUX VIEW and name (FR being a short for FRont). Another axis block appears on your screen. (See figure 63.)

Press the Y/N button to remove the axis block. Notice how the top of the screen has changed to say "View FR". This tells you which AUX VIEW is active.

SELECT FKey POINT and put a point at the origin 0,0 of the FRont view. (SELECT FKey POINT, key in 0,0 and hit enter). SELECT FKey CIRCLE and SELECT this point. Key in the expression .625/2 and hit enter. Notice at the top of your screen that the Radius value is 0.3125. You can use MICRO CADAM to calculate values for you.

SELECT FKey LINE and make sure that /HORIZONTAL/ and /UNLIMITED/ are underlined. key in the value 0 and hit enter. Draw two more lines at Y = 0.75 and Y = -0.75. FILE your drawing.

SELECT FKey AUX VIEW. Notice that submenu item /CHOOSE/ highlighted. Since we have now defined a second AUX VIEW, we now have the option of CHOOSing which view we wish to work on. SELECT the submenu item /2-VU/. The menu prompt area now tells you to "Sel point / Sel circle/". Using the 2-VU submenu option, MICRO CADAM allows you to use points and circles from other auxiliary views to create geometry in the ACTIVE or CURRENT view. (In this case, the active view is FR). SELECT the point at the end of the left-most vertical line on your screen. An unlimited length VERTICAL line should appear on

your screen going through that point. (See fig. 64).

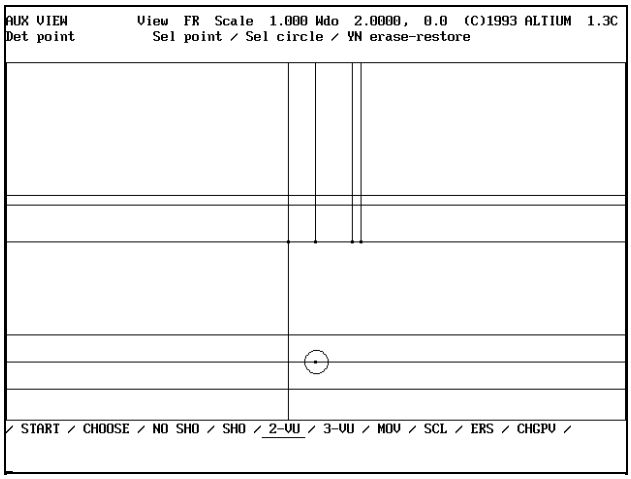

Figure 64 VERTICAL line drawn using a point that is in VIEW PV.

Look at figure 65. We will use these three lines to draw a circle, and have MICRO CADAM calculate what the radius should be for us. SELECT FKey CIRCLE. SELECT the horizontal line going above the small circle first, SELECT the horizontal line going below the small circle second, SELECT the vertical line you just drew using FKEy AUX VIEW, and finally, INDICATE near the point at the center of the small circle.

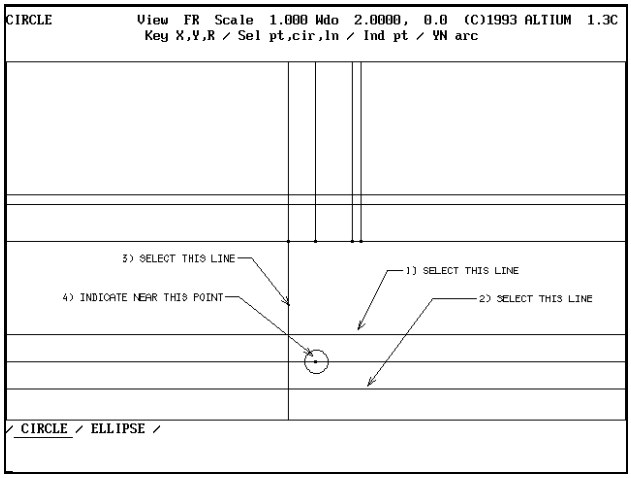

Figure 65 Order of lines to be SELECTed.

A circle should appear that touches all three of these lines. The software tells you that it created a circle with a radius of 0.75 units. ERASE the vertical unlimited line. (FKey SHOW, and SELECT the line). Press the keyboard function key F3 to redraw your screen. The line that was occupying the same screen area as the one you just erased, is restored. (see figure 66).

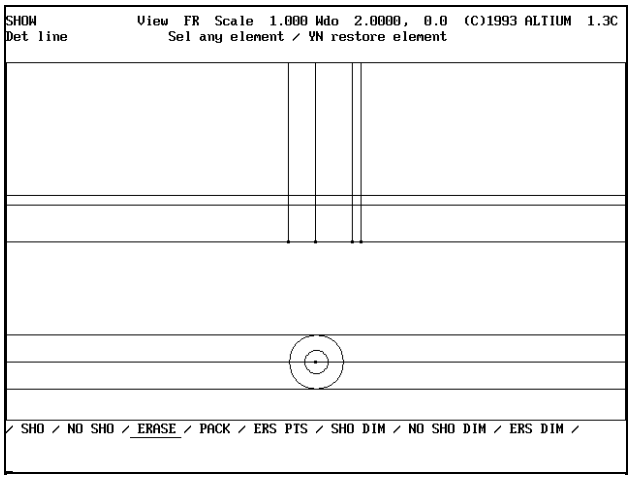

Figure 66 Circle drawn.

We now need to relimit this larger circle and the two lines. SELECT FKey RELIMIT. SELECT the top horizontal line to the left of the circle.and then SELECT the circle. Do the same for the bottom horizontal line. SELECT the circle at the 2 O'clock position, and then SELECT the top horizontal line. SELECT the circle at the 4 O'clock position and SELECT the bottom horizontal line. Your screen should look like figure 67.

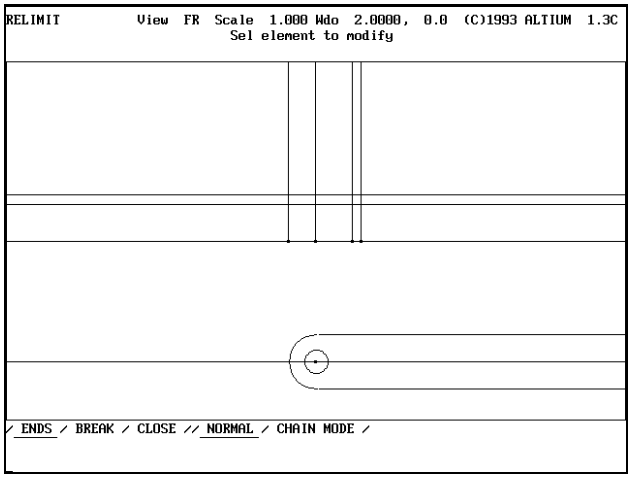

Figure 67 Circle and lines RELIMITed.

SELECT FKey AUX VIEW submenu item /2-VU/. SELECT the two points at the end of the two vertical lines at the very right in view PV. SELECT FKey RELIMIT and relimit these two lines such that they look like fig 68. Press the Y/N key to flip the line if the wrong end is relimited.

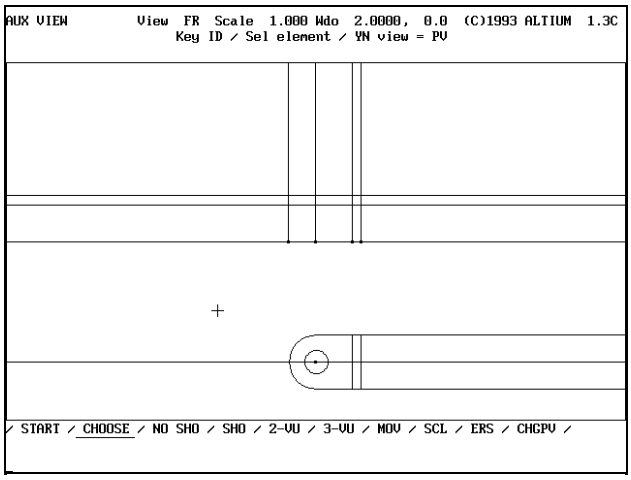

Figure 68 Lines relimited.

SELECT FKey GROUP sub menu item /TRANS/. SELECT the small circle. Press the Y/N button on your mouse (or keyboard Function key F2) to accept the circle as your group and press the Y/N button again to use the origin as your pivot. SELECT the submenu item /COPY/, as we will be making a copy of this circle. Key in the value 5.5,0 as the DX,DY. SELECT submenu item /EXIT/ to disband the group.

What we will do is use this circle to draw the 1.00" and 0.75" dia circles required for the front view. SELECT the FKey CIRCLE and SELECT the small circle on the right. Notice the program prompt area tells you to "Key minus radius to modify". Key in the value -0.5. The circle was changed to a radius of 0.5. Notice the top of the screen confirms this by saying "Rad= 0.5000". We need to use this circle to create another circle with a diameter of 0.75. SELECT the circle and key in the value 0.375. A second circle appears inside the first one. MICRO CADAM used the center point from the circle you SELECTed and then drew a circle with the radius you told it to. Your screen should look like figure 69.

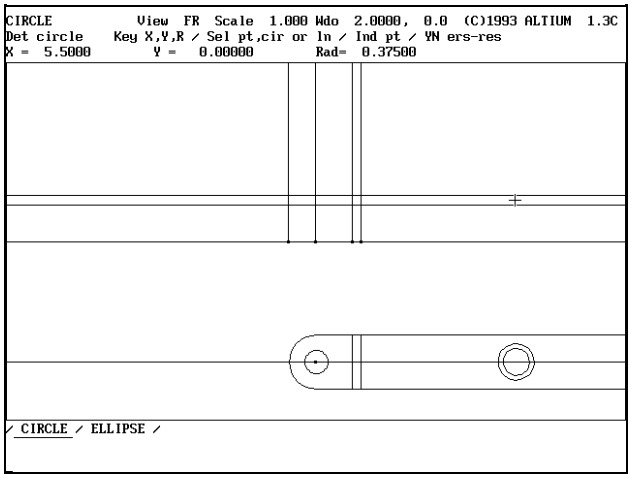

Figure 69 Screen showing two circles drawn.

We now need to draw a vertical unlimited line. But first FILE the drawing.

SELECT FKey LINE and make sure submenu items /VERT/ and /UNLIM/ are underlined or active. Key in the value 6.25 and press enter. SELECT FKey CORNER and prepare to create corners at the intersections of the top and bottom horizontal line and the vertical line you just drew. SELECT the vertical unlimited line and SELECT the horizontal line that is just above the circles in the front view. INDICATE close to the center of the two concentric circles. SELECT the same vertical line and the horizontal line below the two circles, and again

INDICATE near the centre of the circles. If you remember how we numbered the quadrants from earlier in this chapter, what we did was used quadrant #3 for the first corner (lower left possible corner) and quadrant #2 for the second corner (upper left possible corner). Compare your screen with figure 70 to make sure you got the proper corners produced.

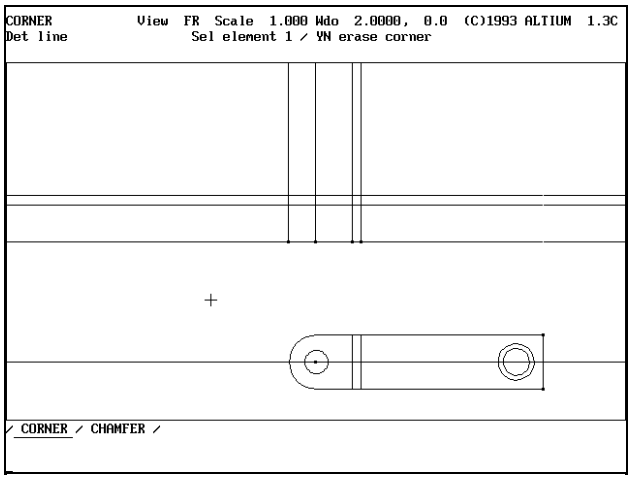

Figure 70 Screen with the two corners produced.

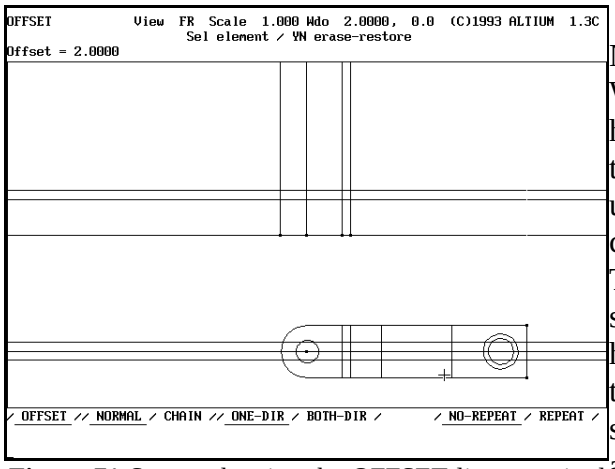

Figure 71 Screen showing the OFFSET lines required to draw the slot.

Now we need to draw the slot in the middle. We will start by drawing the two lines that run horizontal. SELECT FKey OFFSET. Highlight the submenu item /BOTH-DIR/. SELECT the unlimited horizontal line running through the center of the front view. Key in the value .25. Two more horizontal lines are drawn with a space of .25 between them and the original horizontal line. We will draw two Vertical lines that will represent the outermost limits of the slot. SELECT the submenu item /ONE-DIR/ and then SELECT the vertical line at the very right of the front view (the one we just cornered). If you got one of the horizontal lines just re-SELECT /OFFSET/ and try again. INDICATE to the left of the line and key in the value 2.125 and press enter. SELECT the line you just created , INDICATE to the left of it and key in the value 2.0. Your screen should look like figure 71.

Use FKey Window to get a close-up view of the area where the slot is to be drawn. SELECT FKEy WINDOW. SELECT the submenu item /SET/ and the SELECT /1/. The program tells us that a "set made and stored". What we have done is stored a particular position of our drawing so it can easily be recalled. SELECT /BOX/ at the bottom of the screen. INDICATE just above and to the left of the front view and then INDICATE just below and to the right. The front view should fill up your screen. If it doesn’t, just press the Y/N button and you will be back to the previous window. FILE your drawing in case you make a mistake in this next section.

SELECT FKey CORNER. SELECT the top horizontal unlimited line, SELECT the BOTTOM horizontal unlimited line, and then SELECT the left vertical line that you created using FKey OFFSET. (See figure 72 for the correct lines). NOTE: If you have just called your drawing into memory, you must make FR the active view to continue working on this part of your drawing. SELECT FKey AUXVIEW and submenu /CHOOSE/ and then SELECT any element in auxview FR.

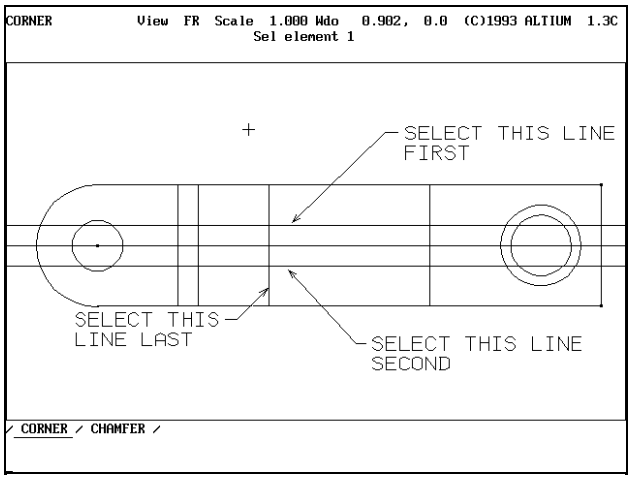

Figure 72 Lines to be SELECTed to produce the slot.

INDICATE to the right of the vertical line and in between the two horizontal lines. One half of the slot should appear. Do the same for the other side except SELECT the other vertical line that represents the right side of the slot. INDICATE to the left of the vertical line and between the two horizontal lines. Your screen should look like figure 73. If it does not, just CALL your previously FILEd version of the drawing and try again. You may have the ability to use the Y/N button to undo the corner and reSELECT the lines.

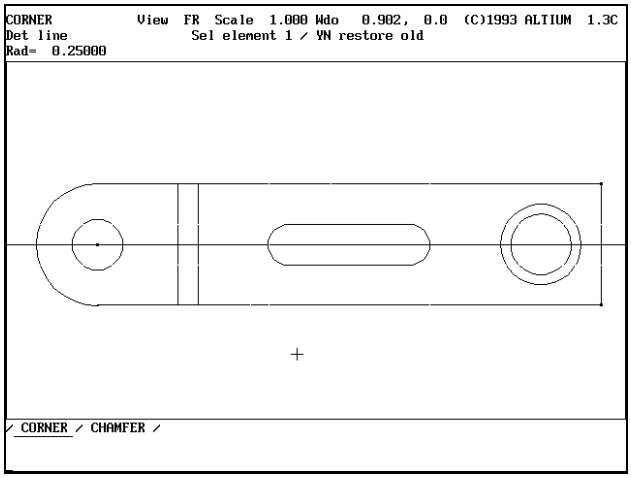

Figure 73 Slot created using FKey CORNER.

Now all that's left to do from a drawing standpoint for the front view is to add the center lines required for dimensioning the view. MICRO CADAM has a special center line drawing capability built into FKey LINE. First we should FILE our drawing. Next, using FKey SHOW, ERASE the remaining horizontal unlimited line that goes through the center of our front view (FKey SHOW, submenu item /ERASE/, and SELECT the line). We need to have a point that we want our center lines to go through. Using MICRO CADAM, this becomes a very easy task. Since MICRO CADAM is point based, we will show the defining points of the circles and then show the horizontal center of the part.

SELECT FKey POINTS and submenu item /DEF PTS/. SELECT the small circle on the left. A point appears at the 3 O'clock position and at the center of the circle. SELECT one of the

circles on the right and the two half circles that make up the slot we just drew. SELECT the submenu item /POINTS/ and SELECT the point at the center of the circle on the left and the point at the center of one of the circles on the right. This will create another point halfway between the two points. You should have points on your screen in the positions shown in figure 74.

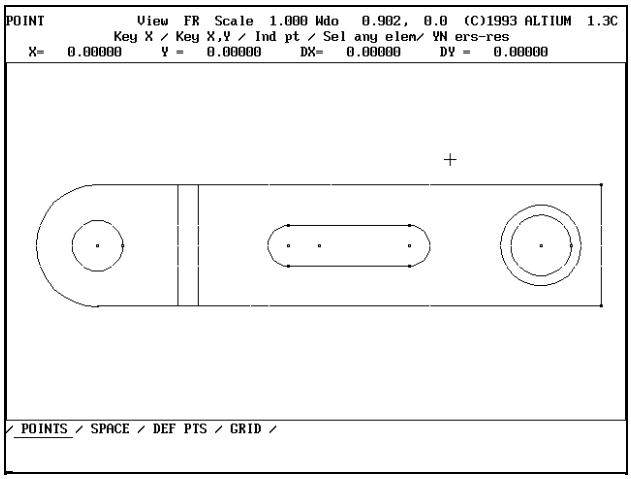

Figure 74 POINTS required for drawing the centerlines.

SELECT FKey LINE and make sure /VERT/ and /CTR/ are underlined. /CTR/ allows us to draw lines of a limited length that have a centerline line type. SELECT the point that is at the center of the circle on the left. The menu prompt area tells us to key the length that we would like the line to be. Key in the value 2 and press enter. A center line appears with the line's center being the same as the point that is at the center of the circle. SELECT the point at the center of the two concentric circles on the right of the screen. Though you are not told by the program, you can just press the Y/N button to accept the value of 2 for the length of the line. Press the Y/N button to draw a centerline 2 units long. SELECT the points that are at the center of the two arc/circles that make up the slot and press your Y/N button. Your screen should look like figure 75.

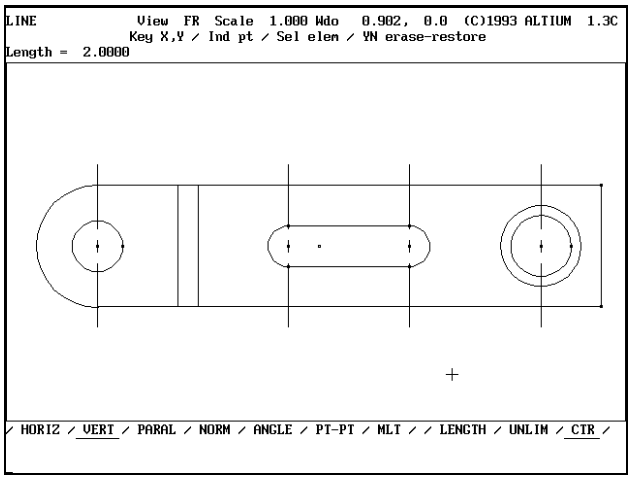

Figure 75 Vertical centerlines drawn through the center of the 2 circles and the slot's end radius's.

We need to draw the horizontal centerline of the part. FILE your drawing. SELECT FKey line and make the submenu item /HORIZ/ active while checking to be sure /CTR/ is still

underlined. SELECT the point that appeared when you SELECTed the centerpoints of the circle on the left and the circle on the right. (See fig 76).

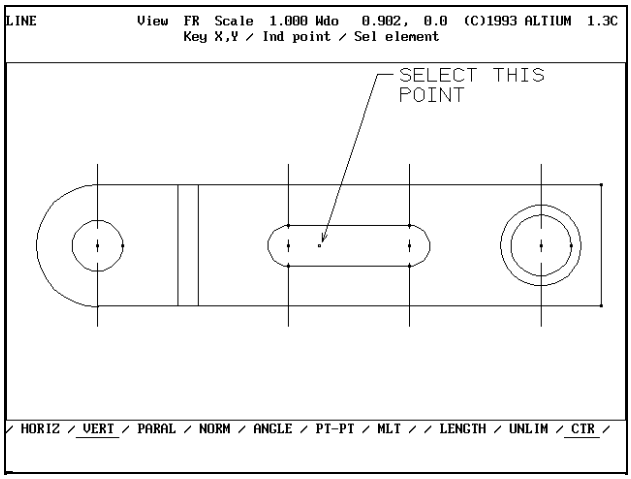

Figure 76 Point to be SELECTed.

Key in the value 9 for the length of the line. If the line appears to go off the screen, do not worry, We will want to save this window setting. SELECT FKey WINDOW and SELECT submenu item /SET/ and then SELECT /3/. This stores this particular view for later use. SELECT the submenu item /1/. This restores your window's viewing area to a larger size and you will be able to see all of the geometry that you have drawn.

We have finished drawing all the geometry that is required for dimensioning and annotating the front view. Now we can use this geometry to help us draw VIEW PV. Compare what you have on screen to figure 77, and if it matches, FILE your drawing. If it does not, use Fkey SHOW, /ERASE/ the geometry that is incorrect, and then try again.

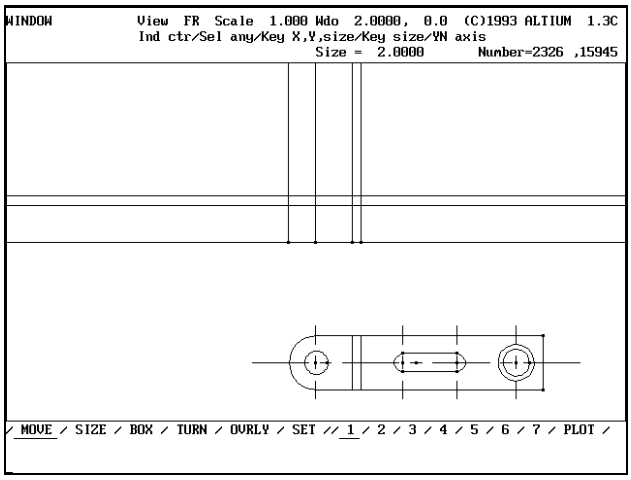

Figure 77 Screen showing centerlines that are required. (Make sure you have used FKey WINDOW, /SET/ /1/.

We need to add 2 more lines to VIEW PV. MICRO CADAM creates geometry in the active view. Since our active auxiliary view is FR, we need to change this to VIEW PV. SELECT FKey AUX VIEW and SELECT any one of the lines that are in VIEW PV. The default submenu item for AUX VIEW is /CHOOSE/. There are a few ways you can make a view active. The menu prompt area tells us we can " Key ID / Sel element / YN view PV". We could use the keyboard and type in the letters "PV" and auxiliary view PV would become active. We can SELECT any element in the auxiliary view that we wish to make active or we could press the Y/N button and accept view PV as the choice. Most MICRO CADAM users use either the Y/N option or they SELECT an element in the view they wish. The ability to SELECT an element in a view is a handy feature, especially considering you can have up to 64 auxiliary views in one MICRO CADAM drawing! Press the Y/N button to accept VIEW PV as the active view.

SELECT FKey OFFSET and SELECT the bottom horizontal line in VIEW PV. INDICATE above the line and key in the value 1.5. We will work with the left half of VIEW PV first. SELECT FKey SHOW and /ERASE/ the vertical line second from the left. Compare your screen with the one in figure 78.

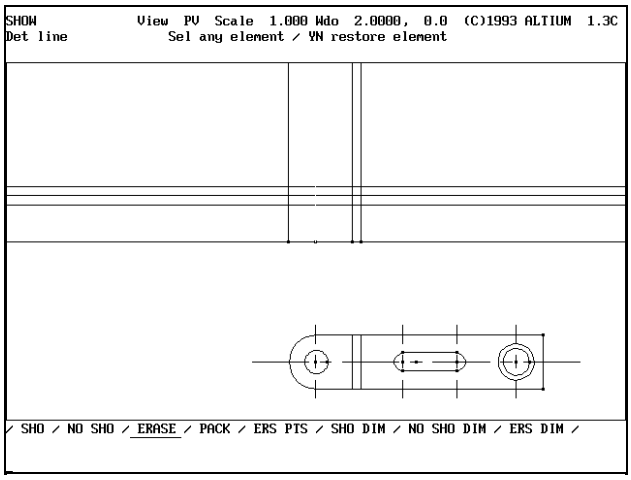

Figure 78 Screen showing line erased.

We need to CORNER the top horizontal line and the two vertical lines on the right. SELECT FKEy CORNER and SELECT the horizontal line at the very top of VIEW PV and SELECT the vertical line farthest to the right. INDICATE below the top line and to the left the vertical line (quadrant #3). SELECT the horizontal line again, and then SELECT the vertical line second from the right. INDICATE in quadrant #4 (below the horizontal line and to the right of the vertical line. Compare your screen with figure 79. to make sure you have created the right corners.

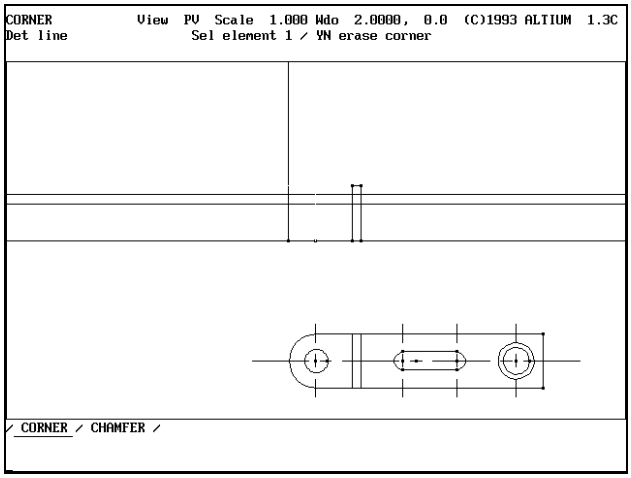

Figure 79 Corner completed.

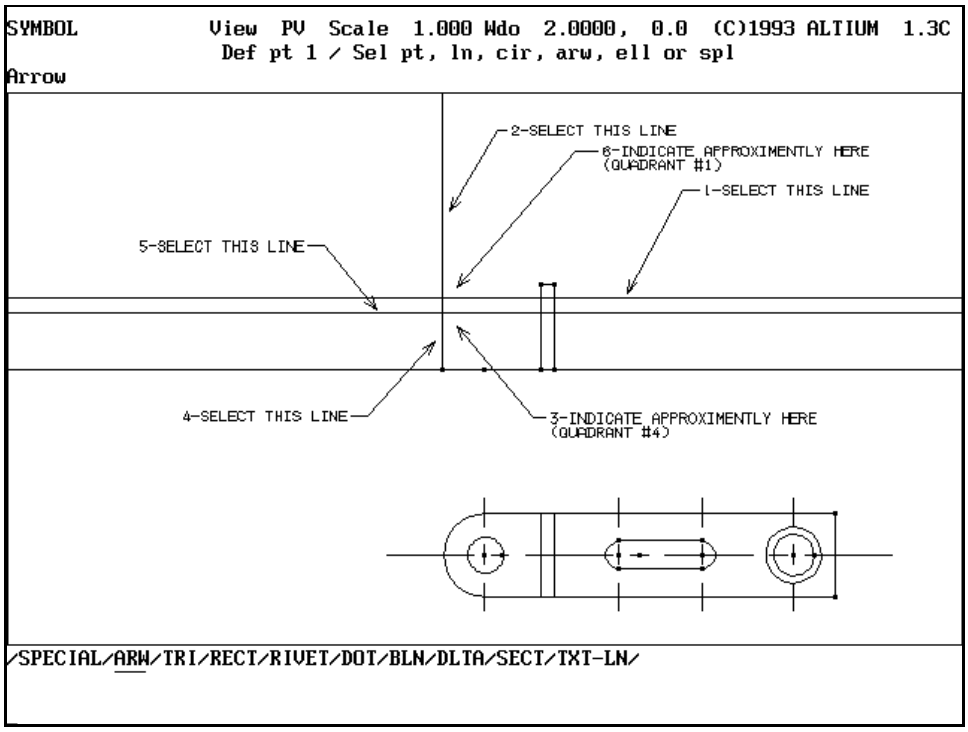

Figure 80 Order of SELECTing and INDICATing required to produce the corners. Follow the instructions in the numerical order shown.

We need to do the same procedure to create corners at the intersection of the two horizontal lines at the top of the screen and the vertical line at the left. See figure 80 for the order of SELECTing and INDICATing and then compare your screen with figure 81.

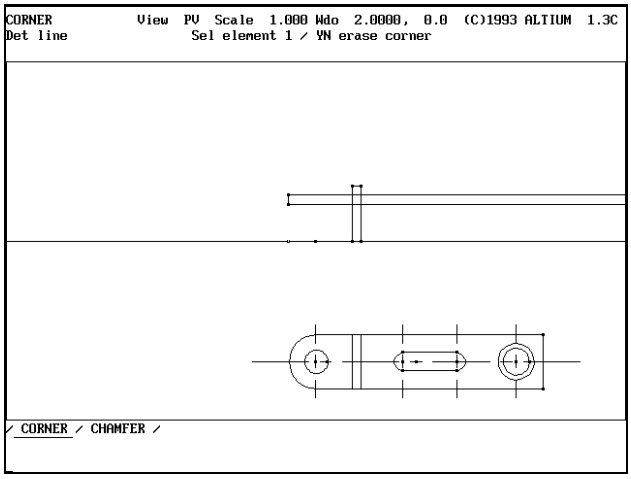

Figure 81 Drawing showing corners as they should be completed.

We now need to define the overall length of swing bracket. For this we can use VIEW FR. SELECT FKey AUX VIEW and SELECT submenu item /2-VU/. SELECT the point at the top right corner of the front view. An unlimited vertical line appears on your screen. Using FKey OFFSET, SELECT the horizontal unlimited line in VIEW PV, INDICATE above it and key in the value 0.125. Compare your screen with figure 82.

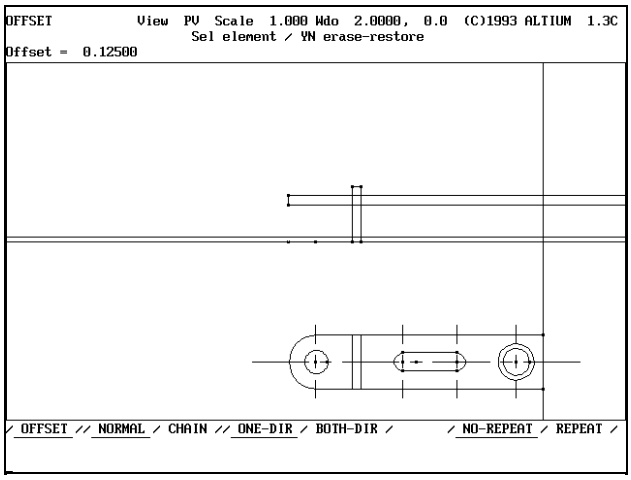

Figure 82 OFFSET line at 0.125

We need to produce a corner at the intersection of the two lines you have just produced. SELECT FKey CORNER, SELECT the unlimited vertical line at the very right and then SELECT the OFFSET unlimited line. INDICATE in quadrant #3 (to the left of the vertical line and below the horizontal line). A corner should appear like the one in figure 83.

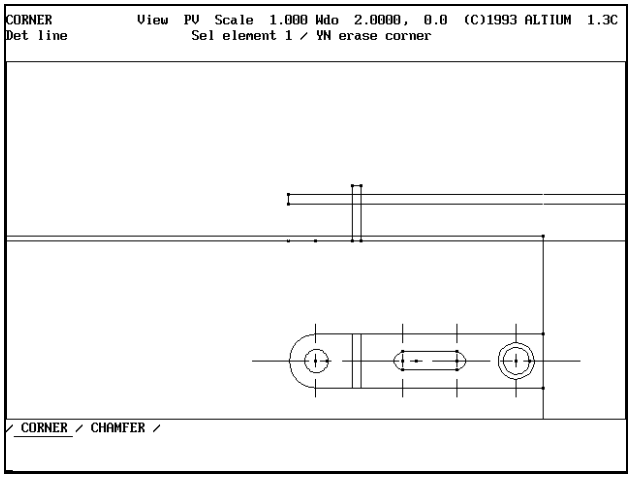

Figure 83 CORNER using the unlimited line drawn using FKey AUX VIEW and the horizontal offset line.

Before we really use the 2 1/2D capabilities of MICRO CADAM, we need to RELIMIT some of these lines to make our drawing a little less complicated. SELECT FKey RELIMIT. SELECT the top horizontal line near the right side of your screen and then SELECT the vertical second from the left. See figure 84 for the location of these lines.

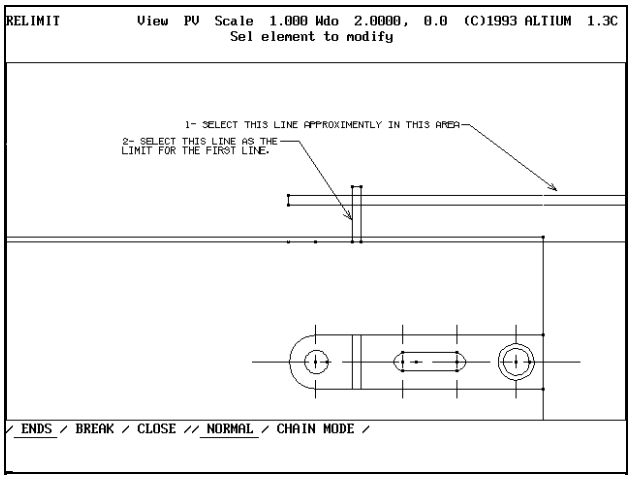

Figure 84 The first in series of lines to be RELIMITed.

FILE your drawing.

We need to RELIMIT 3 more lines. RELIMIT the other horizontal line that is below the one you just used, to the same line you previously used as the "intersecting element". RELIMIT the two other lines such that your drawing looks like figure 85. Notice the effect on where you SELECT the line to be modified has on the result of the RELIMIT. Notice that you have a "Y/N flip" option available if the line did not shorten on the side you need it. Press the keyboard Function key F3 to refresh your screen display and show all geometry.

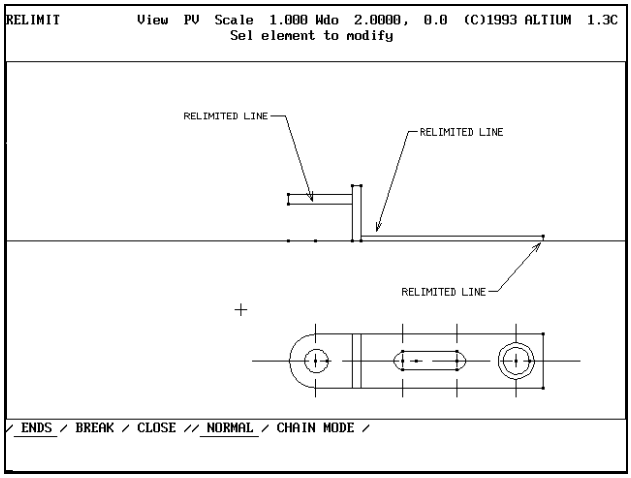

Figure 85 Screen showing lines that were RELIMITed.

FILE your drawing.

USE FKey WINDOW, submenu item /3/. This should restore your previously stored view of AUX VIEW FR. SELECT FKey AUX VIEW and choose submenu item /2-VU/. Using the mouse, SELECT the small circle at about 10:00 O'clock. (See figure 86).

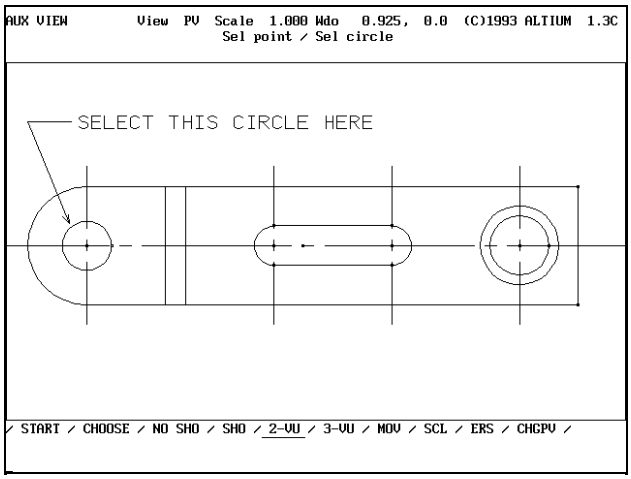

Figure 86 Approximately location for SELECTing the small circle.

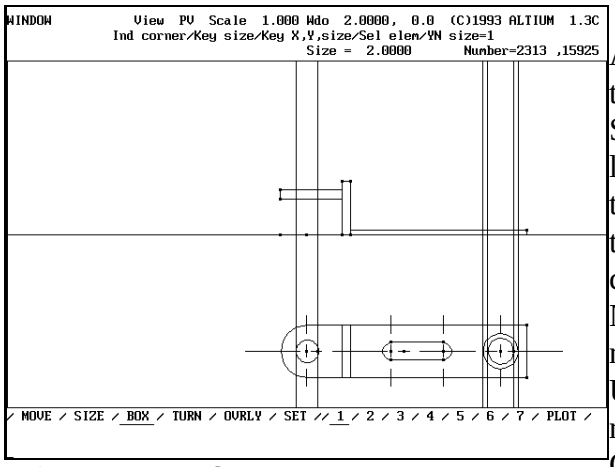

Figure 87 Lines drawn using FKey AUX VIEW /2-VU/.

An unlimited vertical line should appear that is tangent to the left side of the circle. Where you SELECT the circle determines which side the line will appear. If you were to SELECT closer to 2 O'clock, the line would have appeared on the right side of the circle. SELECT the small circle somewhere near the 2 O'clock position. Now SELECT the other two full circles (on the right) on both sides to draw four vertical lines. Use FKey WINDOW, submenu item /1/, to restore your drawing to full screen size. Compare your screen with figure 87.

We still need two more lines drawn to show where the slot is. Using FKey WINDOW, SELECT /3/ to restore your full screen view of VIEW FR. By pressing the SELECT and INDICATE buttons on your mouse, you should be able to toggle back to FKey AUX VIEW.

> When you use the toggle capabilities of MICRO CADAM's FKey WINDOW, make sure the cursor is not located on top of any geometry. This will ensure that you get the toggle capabilities instead of inadvertently SELECTing an element.

Ensure that /2-VU/ is still the active submenu item. SELECT the two half circles that make up the slot. SELECT the left on at about 10:00 O'clock and SELECT the right one at 2:00 O'clock. Use Fkey WINDOW to restore window set /1/, and compare your screen with figure 88. FILE your drawing.

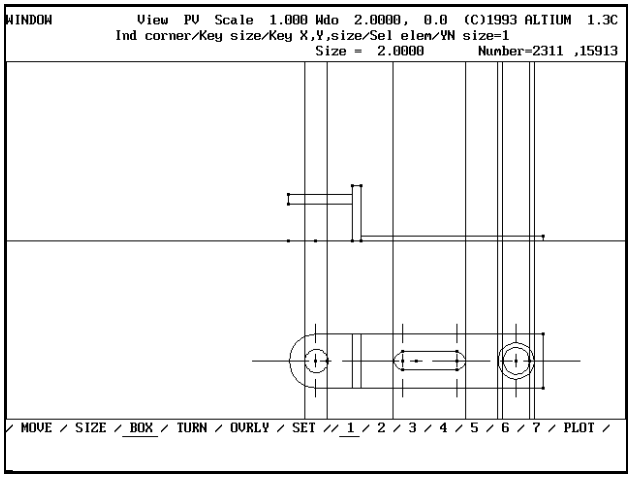

Figure 88 Screen showing slot lines drawn using FKey AUX VIEW /2-VU/

We need to change all but two of these solid lines into dashed lines. SELECT FKey GROUP, submenu item /TRAP/. INDICATE near the top left corner of your screen and then move the cursor to the top right corner, and press the INDICATE. SELECT the submenu item /TRAP IN/ and your screen should change to show only the vertical unlimited lines. If it does not, SELECT /RESTORE/ and RE-SELECT FKey GROUP /ABORT/ and try again.

If you were able to trap only the vertical lines, SELECT /RESTORE/ from the screen. SELECT FKey TYPE and /STYLE/ and press the Y/N. The group of solid lines all change to dashed lines. How-ever, we need to restore 2 of these lines to a solid line type. SELECT /SOLID/ and select the line at the far right of your screen and the line fourth right. (see fig 89).

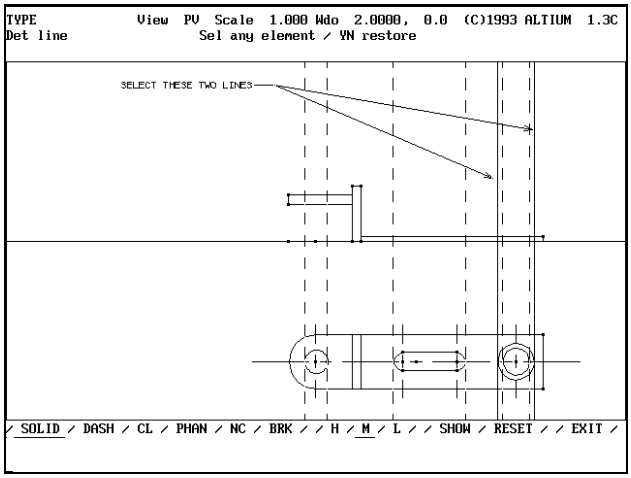

Figure 89 The two lines that need to be restored to line type /SOLID/.

Using FKey RELIMIT, RELIMIT the four vertical lines on the left, such that they look like fig 90. Relimit the two lines on the left end to the top horizontal line that they intersect, and the two lines that represent the slot end to the top horizontal line that they intersect.

HINT: SELECT all the lines near the top of the screen before SELECTing the intersecting element. This way, the new end of the line will appear where you want it, and you will not have to use the YN flip option.

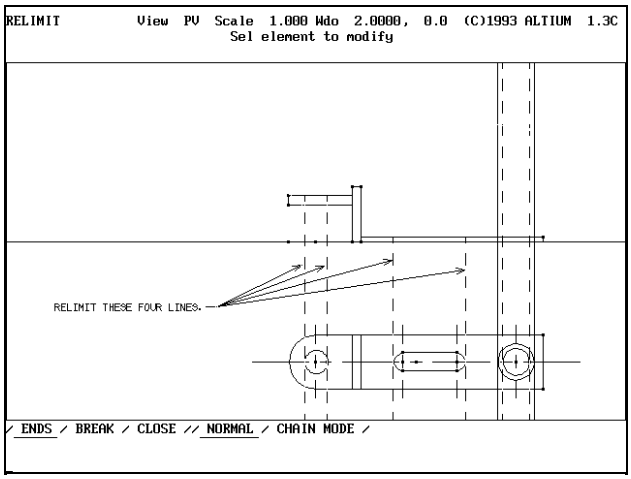

Figure 90 The four lines RELIMITED.

RELIMIT the two lines on the left of the screen such that they look like figure 91. They are RELIMITED to the bottom horizontal line that they intersect. The two lines that represent the slot will be RELIMITED to the unlimited horizontal line. Remember to SELECT the lines near the bottom of the screen. This tells the software which end of the line you want to adjust.

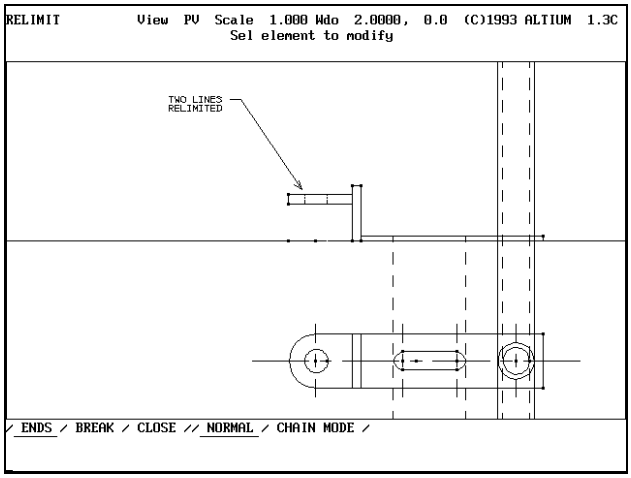

Figure 91 Lines representing the small hole RELIMITed.

We now need to RELIMIT the other 4 dashed lines. We will do this by using the /CHAIN MODE/ submenu item. You may want to enlarge the area of the screen where these four lines intersect the horizontal unlimited line. Use FKey WINDOW, /BOX/ to view that small area of your screen. (See fig 92).

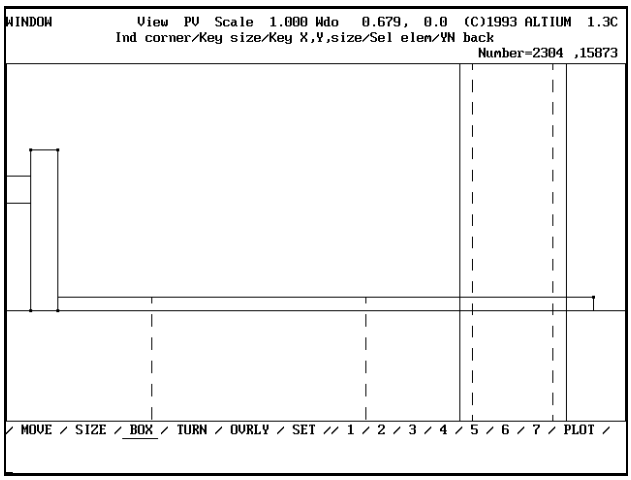

Figure 92 Window changed to show an enlarged view of the lines that need to be RELIMITed.

SELECT FKey RELIMIT and SELECT the dashed line on the far right of your screen, near the bottom. SELECT the horizontal unlimited line. SELECT /CHAIN MODE/ and SELECT the vertical dashed line second from the right, near the bottom of your screen. (Use "YN flip" if the line RELIMITS itself such that the top disappears instead of the bottom.) SELECT the other two dashed lines and use YN flip to make sure they look like they do in figure 93.

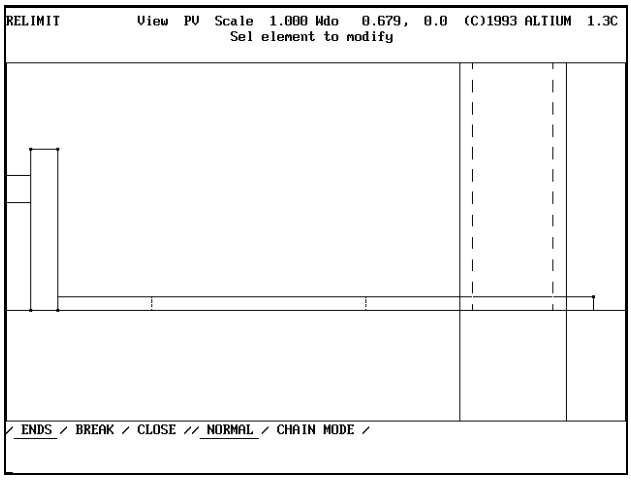

Figure 93 Dashed lines RELIMITed.

We need to RELIMIT the two solid lines to the horizontal line that represents the top of the center plate. SELECT FKey RELIMIT to reset the FKEy to it's default sub menus. SELECT the solid line on the right of your screen and SELECT the horizontal line that represents the top of the plate. Do the same for the other solid line. (see fig 94.)

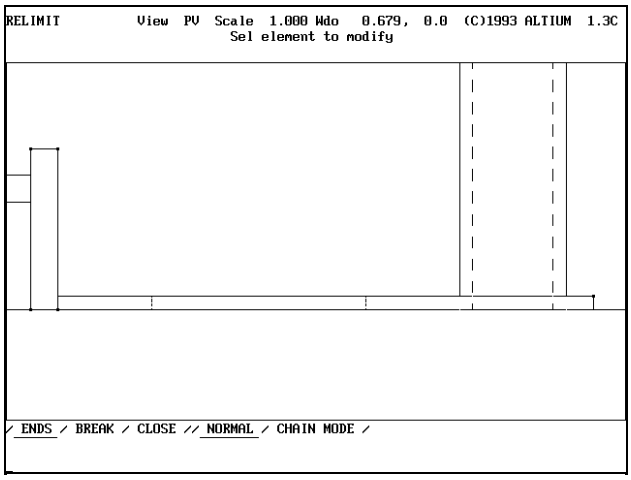

Figure 94 Screen showing two solid lines RELIMITed.

We now will draw the line that represents the top of the cylinder and RELIMIT and CORNER to suit the drawing. SELECT FKey OFFSET, and SELECT the horizontal, unlimited line. INDICATE above the line and key in the value 0.935. Using FKey CORNER, create corners at the intersections of the four solid lines (use quadrant 4 for the left corner and quadrant 3 for the right). Then SELECT FKey RELIMIT and RELIMIT the two dashed lines so your screen looks like figure 95.

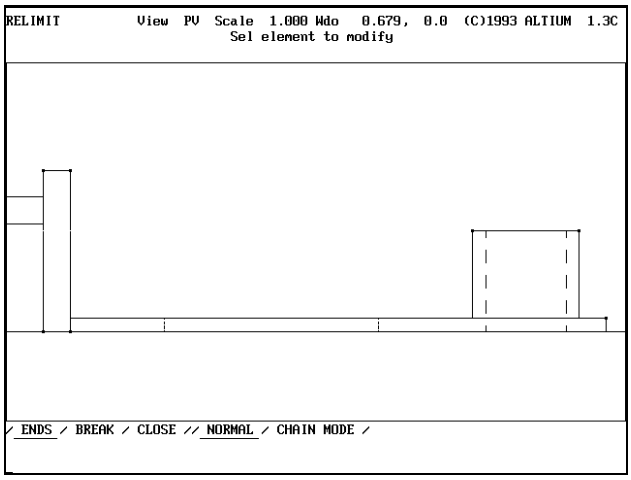

Figure 95 Finished cylinder in VIEW PV.

SELECT FKey WINDOW and key in the value 1.4 to make your view area of the drawing a little larger. Make this Window SET /2/. (SELECT /SET/ and then SELECT /2/).

Using FKey GROUP, SELECT the submenu option /TRAP/. Press the YN button to TRAP in a rectangle. The program prompts you to "Ind corner". INDICATE in the top left corner of

your screen, and then INDICATE the opposite corner on the far right of your screen, but just above the horizontal unlimited line. Make sure you have enclosed at least part of all the geometry of VIEW PV inside the rectangle displayed on your screen. If the little vertical line at the far right, for example, is not at least part way inside the rectangle, you can re-INDICATE the corner to include it. (See fig 96).

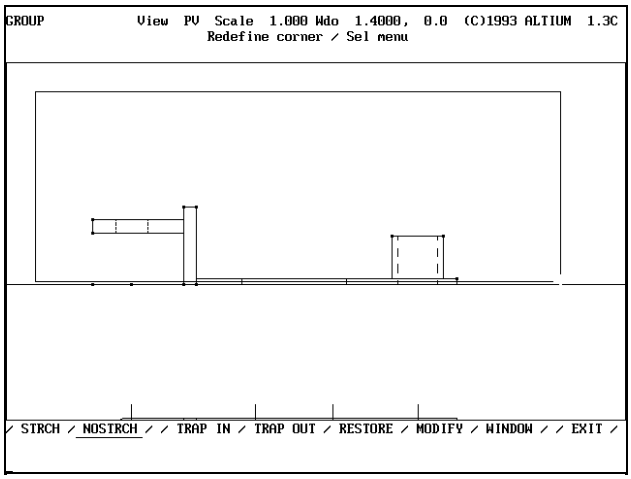

Figure 96 GROUP /TRAP/ rectangle enclosing all the required geometry.

Once you are happy with your rectangle, SELECT /TRAP IN/. Your screen changes to show only the geometry that was TRAPped. Compare your GROUP /TRAP/ with Figure 97.

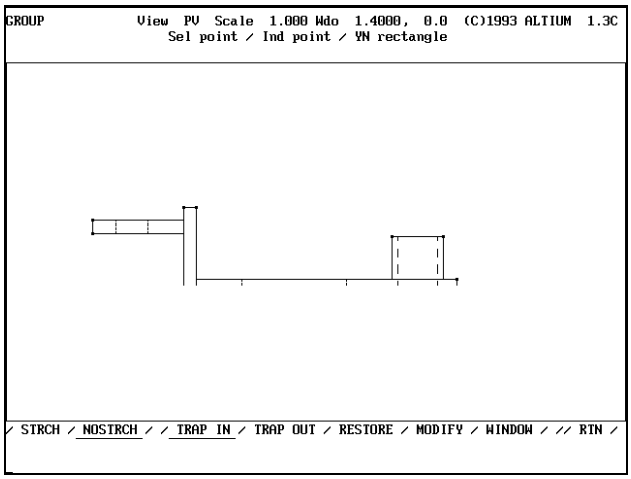

Figure 97 Required geometry displayed after /TRAP IN/ was SELECTED.

SELECT sub menu /RESTORE/ and then SELECT /RTN/. SELECT /MIRROR/. All the elements in the group you just defined change to the color green. SELECT the horizontal unlimited line as a response to the menu prompt " Sel mirror line 1". It too should turn to the colour green. SELECT the menu item /REFLECT/ and then /RTN/. Compare your screen with figure 98.

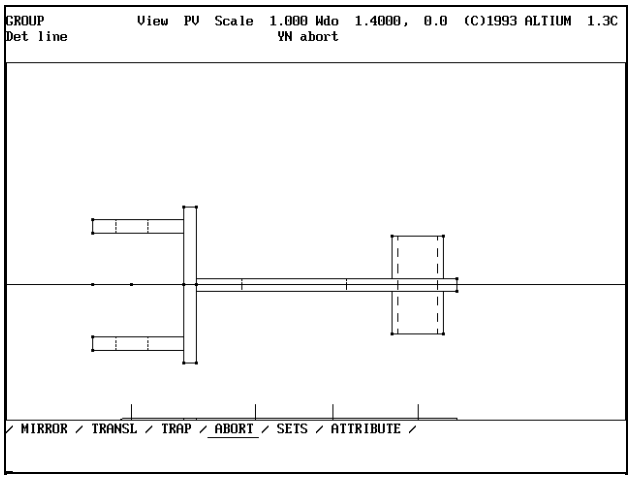

Figure 98 Result of the GROUP /MIRROR/

The next step in drawing this swing bracket would be to create the right side view. We will not do that here. If you wish to try it on your own, we recommend your read the chapter in the book on FKey AUX VIEW (in Chapter 25). FILE this drawing and take a break. In the next section of the QUICKSTART, we will dimension a sample version of VIEW FR for the swing bracket.

Part 2 - Dimensioning the Front View (VIEW FR)

If you took a break before starting this section, you will need to reload the software. Use CAD,QSTART as the group,user and CALL the drawing "SWING ARM DIM," You may need to page /FWD/ to find the drawing if you have been doing some experimenting and FILING different versions of your drawings as you have gone along. There is a preset window included in this drawing. Using FKey WINDOW, SELECT submenu item /3/. Your screen should look like figure 99.

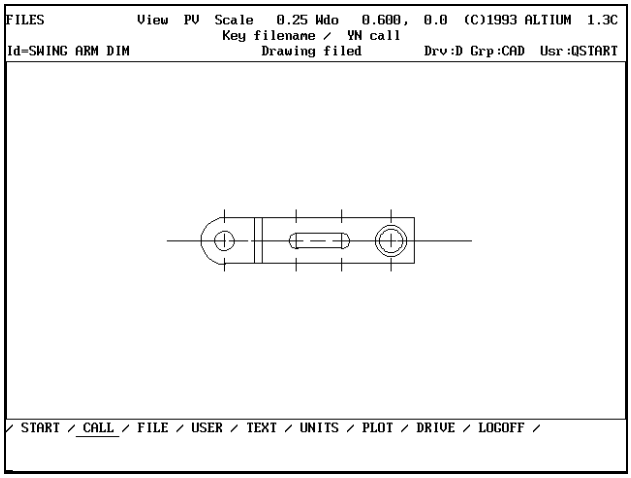

Figure 99 VIEW FR to be dimensioned (WINDOW SET /3/).

SELECT FKey FILE and submenu item /UNITS/. Make sure that the active dimension standard is ISO. Press YN to return to your drawing screen. SELECT FKey AUX VIEW and SELECT any line or circle in VIEW FR. The very top of your screen should change to read " View FR". View FR is the active view.

SELECT FKey DIMENSION (DM on the pop-up menu, DIM on the side bar). The initial default is /HORIZ/ and /PRIM/. This means you are ready to dimension using a single horizontal dimension.

> HINT: FKey DIMENSION has a partial "sticky " quality to it. The type of dimension that is active (ie. /HORIZ/, /RAD/) remains the same if you change FKey's and then come back to FKey DIMENSION. However, the submenu items /PRIM/, /BASE/, and /CHAIN/ do not. If you had used FKey DIMENSION to /CHAIN/ a series of /VERT/ dimensions, changed FKeys to draw something else and then came back to FKey DIMENSION, MICRO CADAM would still display /VERT/, but /CHAIN/ would become /PRIM/.

We wish to dimension a /CHAIN/ of horizontal dimensions, so we must SELECT submenu item /CHAIN/. See figure 100.

To set the dimension text size SELECT submenu /SPEC/ and then /TEXT-HT/. Key in .10000 and press enter, then SELECT submenu /RTN/ to return to the submenu level you left from.

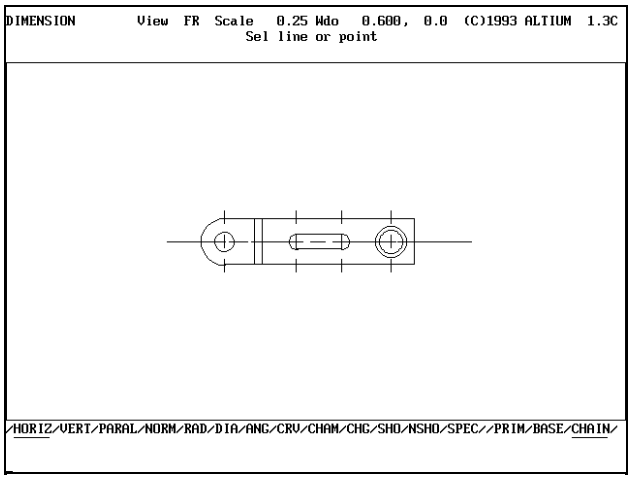

Figure 100 FKey DIMENSION with sub-menu item /CHAIN/ active.

We will dimension the features from right to left across the top of VIEW FR. SELECT the right most vertical line and then SELECT the vertical center line of the cylinder. The program prompts you to " Ind dim center ". INDICATE approximately 1.5 inches above the part. A dimension should appear and be the color green. This means you could modify the placement or attributes of this dimension now or you can do it later. We will adjust it later, once we have finished placing all the dimensions in the chain. With the dimension still highlighted, the software allows us to "Sel line or point". SELECT the right vertical line (not a centerline) second from the right of the part. SELECT the next vertical line just to the left of the last one and then finally SELECT the centerline of the small circle. (See figure 101).

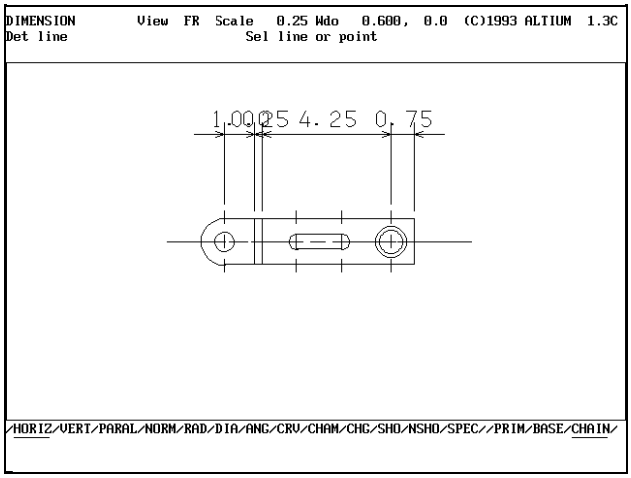

Figure 101 /HORIZ/ /CHAIN/ dimensions.

As you can see, we have some problems reading some of the dimension text. MICRO CADAM's ability to alter existing dimensions is very strong. Under FKey DIMENSION, SELECT the submenu item /CHG/ (for CHanGe). MICRO CADAM prompts us to "Sel dimension". SELECT the dimension on the right with the text 0.75. The dimension should change to the color green to let us know it is the dimension we will change and the available

menu items across the bottom change as well. The easiest way to solve the text problem that we have is to use leaders. See figure 102 for the menu that appears when we SELECT /CHG/.

NOTE: QUICKSTART is dimensioned using 2 decimal places. Your system may be set for 3 decimal places.

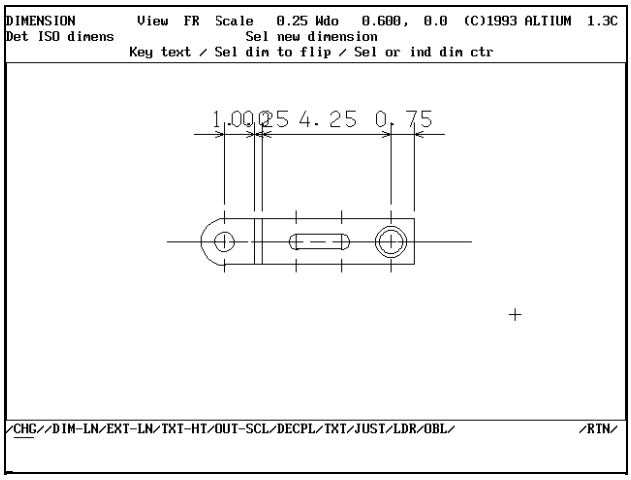

Figure 102 /HORIZ/ /CHAIN/ dimensions.

SELECT the submenu item /LDR/ (for LeaDeR). INDICATE somewhere above and to the right of the dimension as an approximate location for the leader. It is a matter of personal preference as to the angle of the arrow line. MICRO CADAM defaults to using 60 deg. for the arrow angle. You can key in any value from 1 to 90. For this exercise we will use a value of 90. Key in 90 and press enter on the keyboard. The dimension stays the color green as you can still alter other characteristics of the dimension, however, the leader has now changed to a value of 90 degs. SELECT /CHG/ again as we will need to put leaders on two other dimensions. Compare your screen with figure 103.

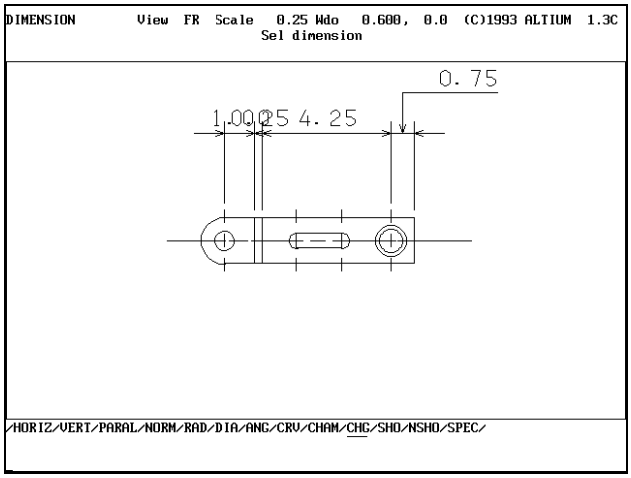

Figure 103 90 deg leader added to a horizontal dimension.

Do the same for the dimension on the extreme left (text 1.00). SELECT that dimension, it's color should change to green, SELECT /LDR/ and INDICATE above the dimension and to the left at about the same height as the leader on the right. Key in the value 90 and press enter. SELECT /CHG/ again and this time try and get the dimension with the text 0.25. If you do not succeed at first, just try a re-SELECT the dimension in another spot. Try SELECTing the dimension text or one of the extension lines. Once you have the dimension active (color green), SELECT /LDR/ and INDICATE above and to the right of the 4.25 dimension's text.

SELECT /CHG/ and compare your screen to figure 104.

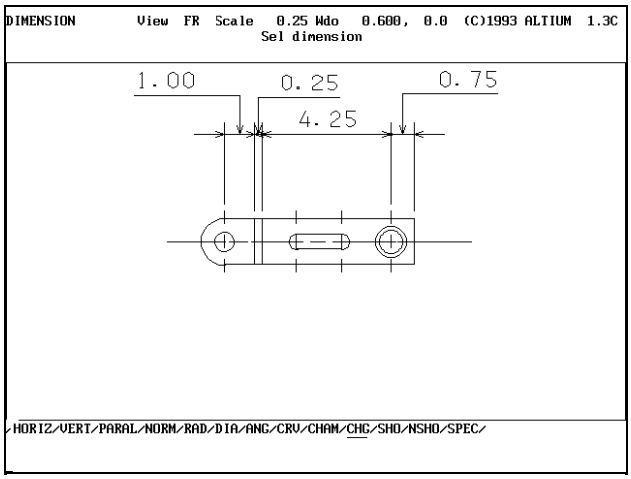

Figure 104 Dimensions changed with 90 degree leaders.

As you can see, the arrows that are horizontal and associated with the 0.25 dimension are a little unclear. There is an arrow from the 1.00 dimension right underneath the leader arrow of the 0.25 dimension. Also, there is a problem with the arrow second from the left, that is pointing to the right. It is confusing to the eye as well. MICRO CADAM allows you to suppress the display of these arrows. If we are successful, it will make our dimensioning a little clearer. Make sure /CHG/ is still highlighted (if not SELECT the 0.25 dimension again) and SELECT /DIM-LN/. The default option is /NONE/. This submenu allows us to change how the dimension line looks, from a witness line point of view. Since we do not want an arrow here, the default option /NONE/ is what we need. MICRO CADAM prompts us to " Indicate witness end ". INDICATE to the left of the dimension. The arrow disappears. The other problem arrow is associated with the 1.00 dimension. SELECT /RTN/ and then SELECT the 1.00 dimension. It should change to the color green. Again, SELECT /DIM-LN/ and this time INDICATE to the right of the dimension. This suppresses the display of the arrow on the right side of the dimension. SELECT /RTN/ and then SELECT /RTN/ again to return to the primary menu of FKey DIMENSION. Press the keyboard function key F3 to refresh your screen and then compare your screen to figure 105.

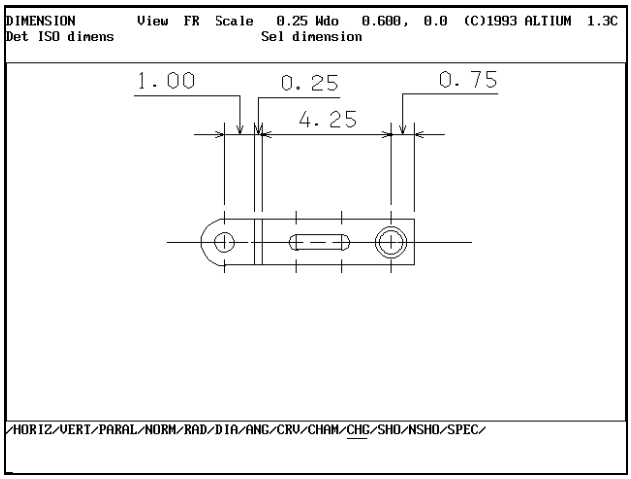

Figure 105 Screen showing all arrows that have to suppressed.

We need to dimension the location of the slot. SELECT FKey DIMENSION (if it is not already active) and SELECT /VERT/. Make sure /PRIM/ is underlined. SELECT the horizontal centerline and ten SELECT the bottom vertical line of the part. In the program prompt area there is a message which says " Key dec plc = 2 ". Since we need to dimension these distances to 3 decimal places, Key in the value 3 on your keyboard and press enter. The prompt should change to say " Key dec plc = 3". (NOTE: Your system may already be

configured for 3 decimal places!) INDICATE to the right of the part. Since the text is unclear, we will need to move it below the actual default location. If you INDICATE below the part and to the right, you INDICATE a new location for the center point of the text. As long as the dimension is the color green, you can change the location of the dimension. Try and get your dimension in the position that it appears in figure 106 (below and to the right of the part).

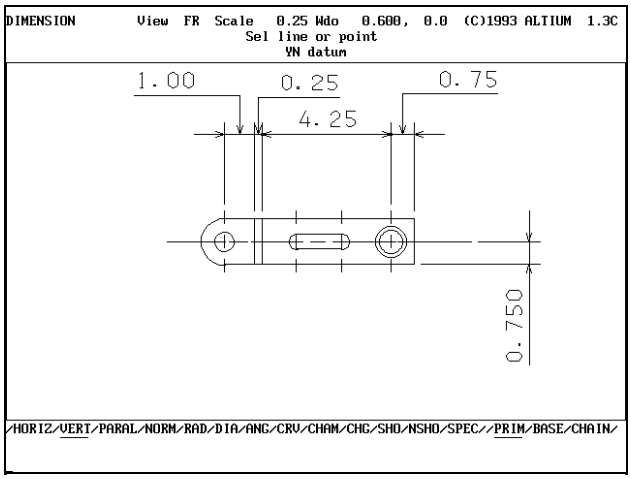

Figure 106 Location of vertical dimension.

SELECT the top horizontal line and the bottom horizontal line. INDICATE a position for the dimension just to the right of the other vertical dimension. Again, you have the problem of not enough space to fit the dimensions text in between the witness lines. INDICATE again, just to right of the other vertical dimension until you have it located in about the same position as shown in figure 107. (Just to the right of the previous dimension).

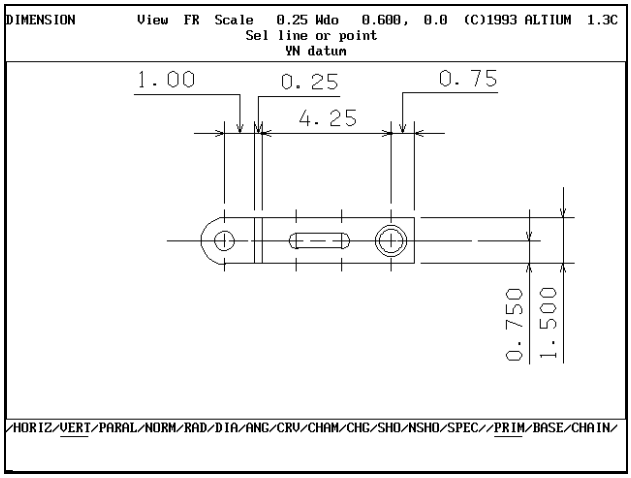

Figure 107 Position of second vertical dimension.

We now need to add the dimensions required for locating the slot as shown in figure 108.

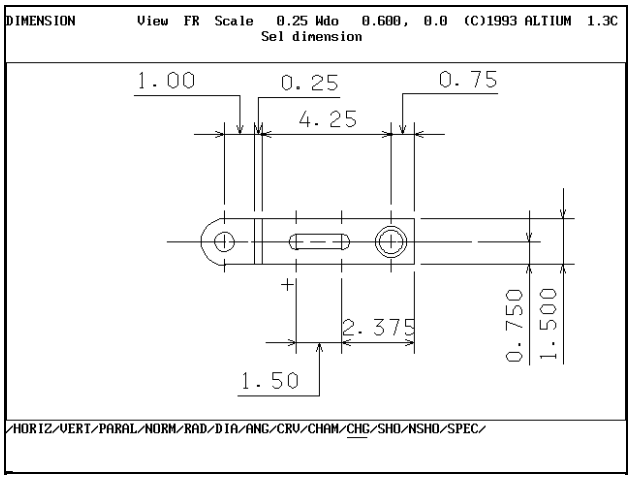

Figure 108 Final position of the dimensions required for the slot.

Using FKey DIMENSION, SELECT /HORIZ/ and /CHAIN/. SELECT the vertical line at the far right of the part and then SELECT the right center line of the slot. Make sure that there will be 3 decimal places and then INDICATE about 1.5 inches below the part. SELECT the left centerline of the slot. The dimension automatically places itself in line with the previous one, however, the dimension shows 3 decimal places and we want this one to be accurate to 2 and the text does not fit between the witness lines of the dimension. SELECT /CHG/ and then SELECT the 1.500 dimension we need to change. SELECT /DECPL/ (DECimal PLace) and key in the value 2. The text should change to read 1.50. SELECT /LDR/ and place a 90 deg leader below and to the left of the dimension line. Compare your screen with figure 108 to make sure you have the correct locations.

FILE your drawing.

All that is left to dimension on VIEW FR is to dimension the RADIUS and DIAMETERS required. SELECT FKey DIMENSION and SELECT /RAD/. The program prompts you to " Sel circle". SELECT the part circle (arc) on the left of the slot. Change the decimal places to 2 and then INDICATE to the left of the horizontal dimension 1.50. By INDICATing new locations, make the placement of the dimension resemble figure 109.

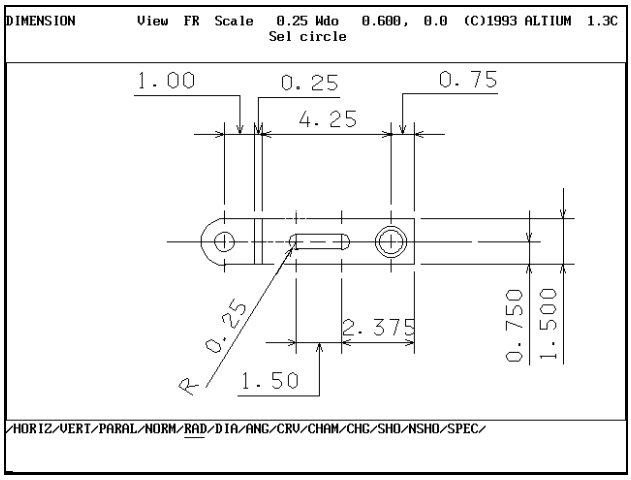

Figure 109 Location of first radius dimension.

We need to put a radius dimension on the drawing for the arc on the left side of the part. Look at figure 110 and try and get your dimension to be placed down and to the left like the one in the illustration.

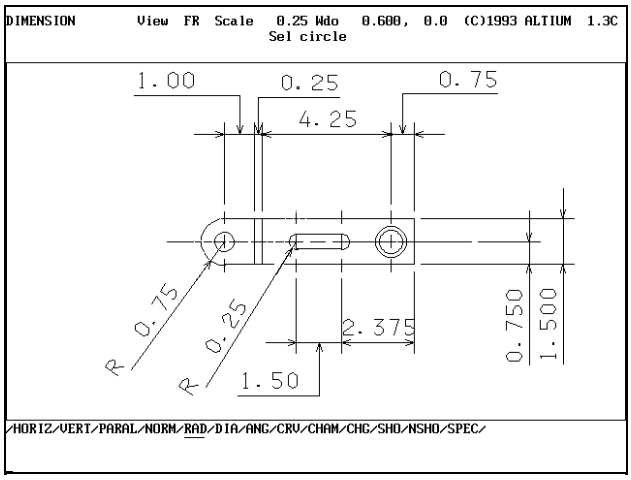

Figure 110 Location of second required radius dimension.

Submenu item diameter (/DIA/) works the same way as /RAD/. Using the program prompts as a guide, try and add diameter dimensions to the small circle on the left and the two concentric circle on the right that represent the cylinder. Put the small circle's dimension above and to the left of the part, and have the other dimensions one above and to the right, and one below and to the right of the part. See figure 111 for these locations.

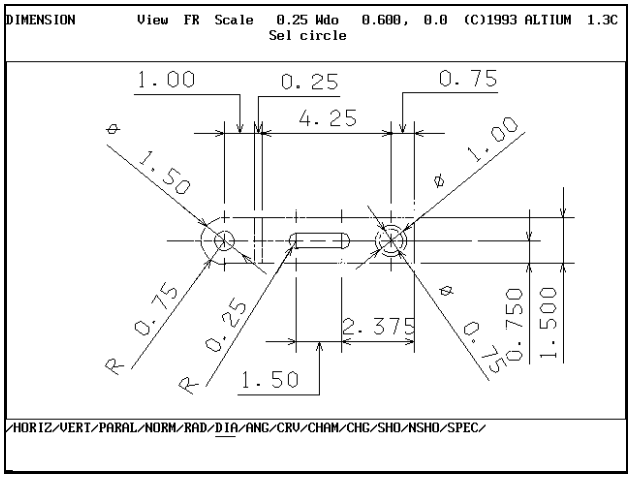

Figure 111 Locations for diameter dimensions.

For additional practice at adding dimensions, use FKey AUX VIEW, /CHOOSE/ and select any element in view PV. Looking at figure 1 at the beginning of this section, add the dimensions and notes shown.

> HINT: To do the centerline marker, use 2 separate notes consisting of "C" and "L". Using FKey NOTE /CHG/, /MOVE/, move the "L" into position over top of the "C". This is an example of something that you would want to store in a symbol library for instant access. See FKey SYMBOL in Chapter 24 for help in customizing a symbol library.

Part 3 - Creating the Isometric View (VIEW IS)

In the last section, we used geometry in one auxiliary view to aid in the creation of geometry in another view. We saw how SELECTing a point or a circle in one view generated a line in another view. This is an example of the 1/2 of the 2 1/2D capabilities of MICRO CADAM. We used the FKey AUX VIEW submenu /2-VU/ to create these lines. There is another way to use the mathematical connection between the views to create geometry. That way is by of the submenu item /3-VU/ from FKey AUX VIEW. For /3-VU/ to work, you must have *at least three* AUX VIEWS defined in you drawing. /3-VU/ is quite easy to learn to use if you follow a few basic steps.

1. Make sure the VIEW you want the geometry created in, is the active view.

2. SELECT an edge line or construction plane in one auxiliary view.

3. In another auxiliary view, you will SELECT the geometry that would be on that construction plane.

We will be using a pre-drawn version of the swing arm to create an isometric view. The isometric view has been created already, but there is no geometry in it. Though in this example we will be using /3-VU/ to create an isometric perspective, you can use this technique to aid in the construction of other orthographic and true views. See FKey AUX VIEW in Chapter 25 for more information and examples of how this may be done.

Using FKey FILE, CALL the drawing SWING ARM ISO,. FILE this drawing under a new name called SWING ARM ISO,XXX where XXX are your initials. We have predefined a series of window SETS. /1/ is a view of the whole drawing. /2/ is a closeup on AUX VIEW PV. /3/ is a closeup of AUX VIEW FR. /4/ shows the AUX VIEW RS (Right Side) and /5/ is a closeup of AUX VIEW IS (ISometric). It will help to take a look at the finished isometric perspective first to get an idea as to what we will be doing. (see fig 112).

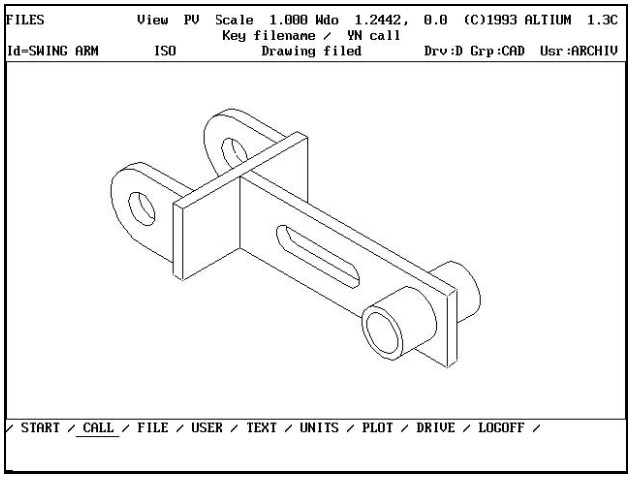

Figure 112 Isometric perspective of the swing arm.

SELECT FKey WINDOW and SELECT /1/. Your screen should look like figure 113.

Because we will be working only with the geometry to create the isometric view, we can relieve some of the clutter on the screen by suppressing the display of the dimensions. This will help us be to pick only geometry when we work with FKey AUX VIEW submenu /3-VU/. SELECT FKey SHOW and the SELECT the submenu item /NO SHO DIM/ (NO SHOw DIMensions). All the dimensions disappear but they are not erased. The display of the dimensions has been suppressed. You can bring the display of the dimensions back by SELECTing /SHO DIM/.

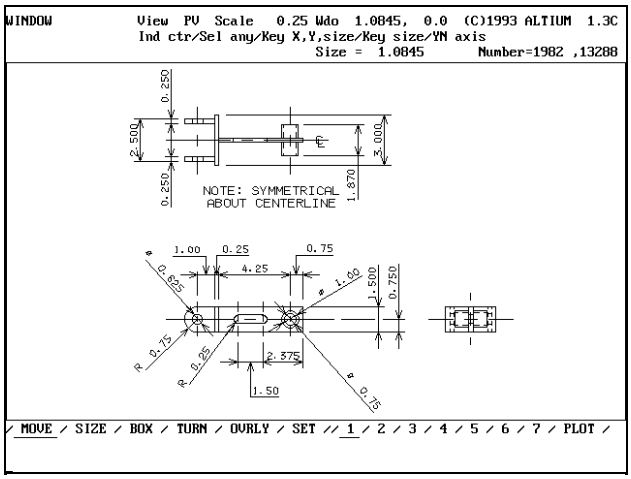

Figure 113 Screen for FKey WINDOW, sub menu item /1/ showing the preset window.

> NOTE: When an element has had it's display suppressed, no modifications will occur. In the exercise's example, if you were to use FKey GROUP and /TRAP/ a set of elements and then /MOVE/ them, the dimensions would not move with the geometry. GROUP /TRAP/ only works on geometry that is displayed.

Your screen should look like figure 114.

Using Fkey WINDOWS, SELECT /3/ to get a closeup of AUX VIEW FR. Make AUX VIEW FR your active view by SELECTing any element in the view. Check to make sure you are working in VIEW FR by looking at the top of the screen It should say "View FR". SELECT FKey SHOW and SELECT the submenu item /NO SHO/. SELECT each of the centerlines. As they are SELECTed, their display should be suppressed. We do not want to have these centerlines get in the way of our SELECTing the elements that make up the swing arm. If, by accident, you SELECTed a solid line or circle, you can press YN to

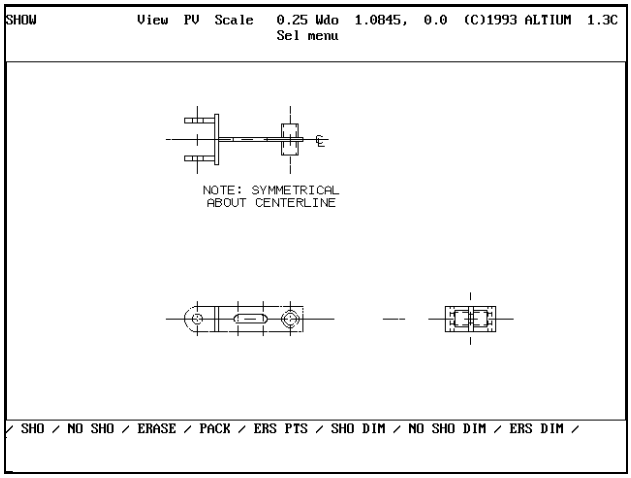

Figure 114 Screen with the display of the dimensions suppressed.

restore it, if it was the last element you SELECTed. If that does not bring back the element, SELECT /SHO/. This changes your screen to display only the elements that were previously suppressed. SELECT /NO SHO/ again, and SELECT the element that you made the mistake with. SELECT /SHO/ and your screen toggles back to the original view of the geometry. Compare your screen with figure 115.

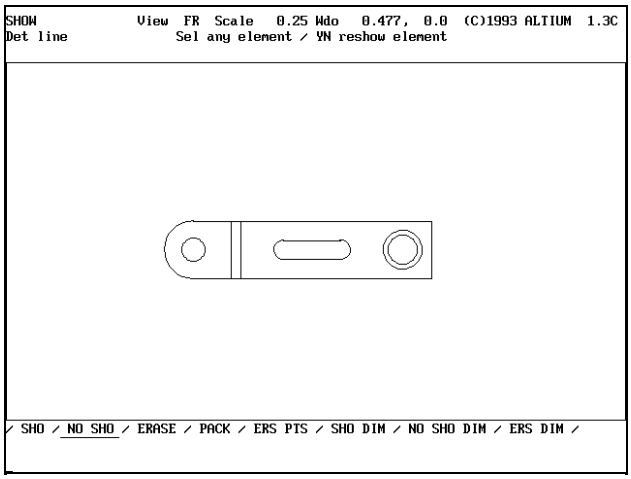

Figure 115 AUX VIEW FR with only the geometry displayed.

The first step to creating the isometric, will be to define a group of elements that we would like to project into our isometric view. SELECT FKey POINT and SELECT the small circle on the left side of AUX VIEW FR. Press the YN button to display a point at the center of the circle. We will use this point in just a moment. SELECT FKey GROUP and submenu item /TRAP/. Press the YN button to tell MICRO CADAM that we want to use a rectangle to define our group. INDICATE above and to the left of the part, and then INDICATE below such that the resulting rectangle includes the small circle, the concentric arc on the left side, and the top and bottom lines without getting any of the vertical lines. See figure 116 for the required trap rectangle.

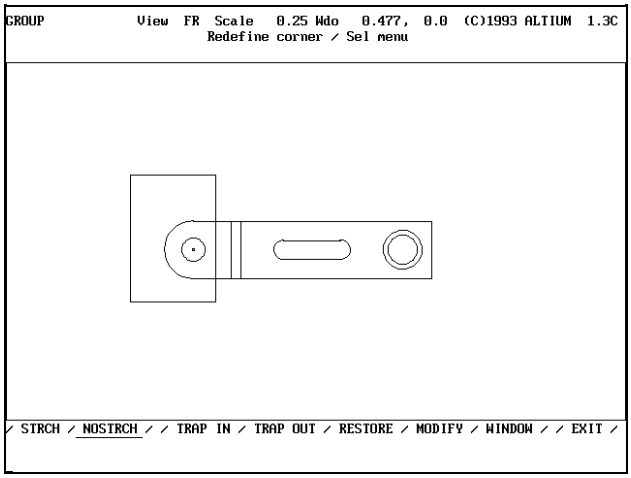

Figure 116 Required /TRAP/ rectangle.

SELECT /TRAP IN/. Your screen should change to display only two horizontal lines, the small circle, the half circle on the left side and the point you just finished drawing. SELECT /RESTORE/ to re-display all the geometry. SELECT FKey WINDOW and use /2/ to fill your screen with AUX VIEW PV. SELECT FKey AUX VIEW and press the YN button until the active view is IS (for ISometric). SELECT the submenu item /3-VU/. The menu prompt area has an option that tells you to "Sel edge line". SELECT the horizontal line at the bottom left

of VIEW PV that represents the front face of the part that has the small hole. See figure 117 for the correct line.

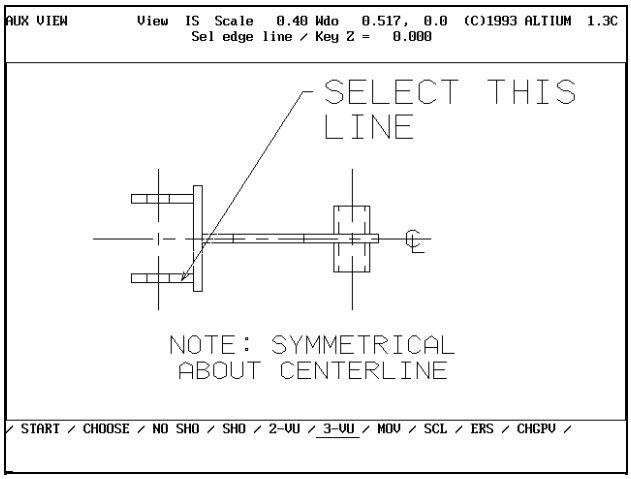

Figure 117 Edge line to be SELECTed.

The program prompt area has an option saying " YN group ". You can SELECT individual lines, circle etc, to be projected into another view, or, as in this case, if you have pre-defined a group, you can project a GROUP of elements. Press the YN button to use the group. If the "YN group" option did not appear in the program prompt area, you should repeat the previous steps. You may not have been successful in defining your group.

SELECT FKey WINDOW, and SELECT window set /5/. Your screen should look like figure 118.

SELECT window set /4/. SELECT FKey AUX VIEW. Notice that /3-VU/ is still underlined.

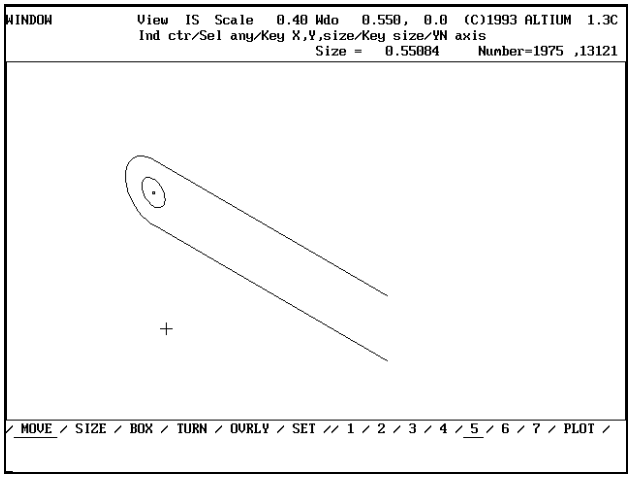

Figure 118 Group of elements projected into AUX VIEW IS.

You can tell that you have an edge line already SELECTed by the program prompt area. There is an option that says "YN erase". This indirectly tells you that you are still

SELECTing elements to be projected using a previously defined edge line. RE-SELECT the submenu item /3-VU/. Now the program prompt area says " Sel edge line". You now know that you are starting the process over again. SELECT the top horizontal line in the RS view. (See fig 119.)

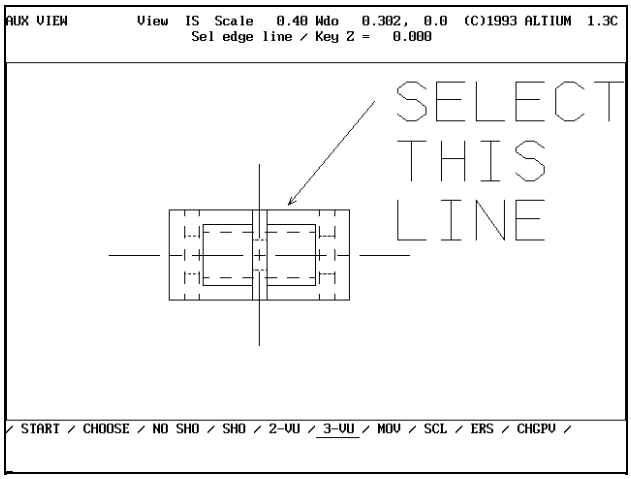

Figure 119 Horizontal line to be SELECTED from AUX VIEW RS.

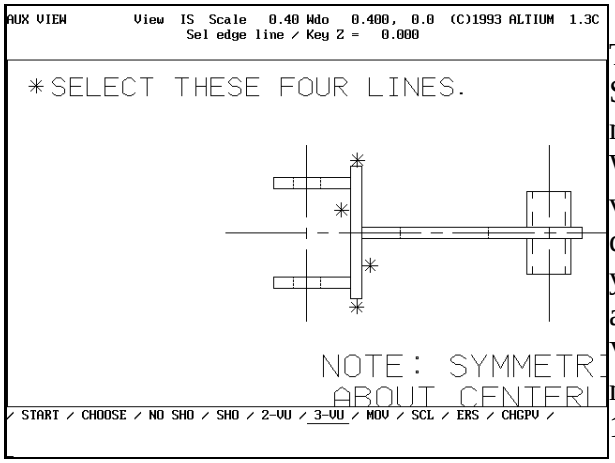

Figure 120 The four lines that are to be SELECTed.

Toggle to FKey window (by pressing the SELECT and INDICATE buttons on your mouse at the same time) and SELECT /2/. With FKey WINDOW still active, SELECT the vertical centerline on the left. Your view of the drawing now has that centerline at the center of your window. Key in the value 0.2 to make it appear even larger. Toggle back to FKey AUX VIEW and then SELECT the four lines that make up the rectangle. (as shown in figure 120.)

Your screen will look different from figure 120, You will have a closer view of the four lines in order to make them easier to SELECT.

SELECT FKey WINDOW and SELECT /5/. You should see those four lines projected into the isometric view. SELECT /4/. Notice that the top horizontal line is still in green. This lets you know that the particular edge line is still active. SELECT FKey AUX VIEW and you will find /3-VU/ is underlined. Re-SELECT /3-VU/ as we need to use a different edge line. This time SELECT the bottom horizontal line.Toggle to FKey WINDOW, and SELECT /2/ again. Again /BOX/ in on the same rectangle that you used before. Be sure to get close

enough so that you will have no problem SELECTing the same four lines. Once you have SELECTed the four lines, toggle to FKey WINDOW and SELECT /5/. Compare your screen with figure 121.

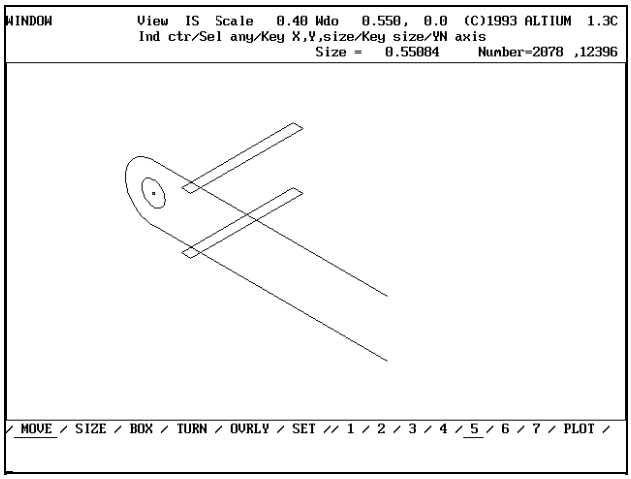

Figure 121 Isometric view with the rectangle projected onto two different planes.

Sometimes, while generating an isometric, you may find it easier to just project certain elements using /3-VU/ and then use the regular MICRO CADAM functions to draw what you need. SELECT FKey LINE and SELECT /PT-PT/. Make sure /LENGTH/ is underlined. SELECT one end of the top rectangle and then press the indicate button to "lock" onto the end of the line. SELECT the same end on the bottom rectangle and lock onto its end. You only need to do this for the two ends on the left and the one end that is the lower right. Erase the two lines on the bottom rectangle that would not be seen if what you drew was a solid object (see figure 122).

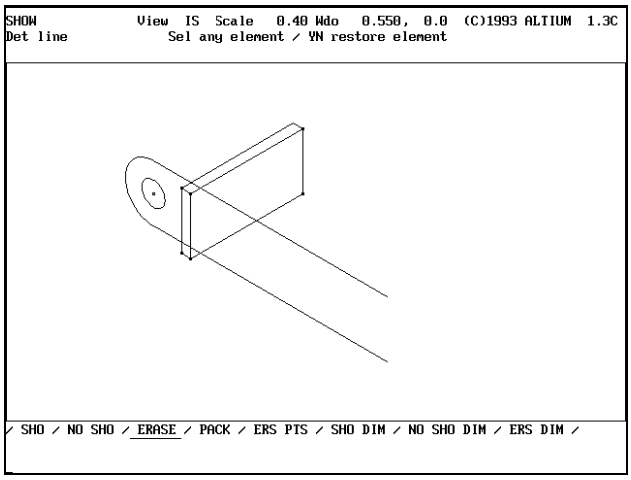

Figure 122 Isometric view with two lines erased and top and bottom rectangles connected using FKey LINE /PT-PT/.

By projecting the point we drew at the center of the small circle using two different edge

lines, we will be able to easily construct the isometric perspective of the two brackets. To see where we are headed, refer back to the finished isometric at the beginning of this section. First RELIMIT the two lines that look like they are going through the solid plate we just created. SELECT FKey RELIMIT and SELECT the top line. SELECT the line that represents the top of the back face of the plate. SELECT the other line and use the left back line of the plate. If your screen looks like figure 123, FILE your drawing. If not, ERASE what does not look correct and redo the elements using FKey AUX VIEW /3-VU/.

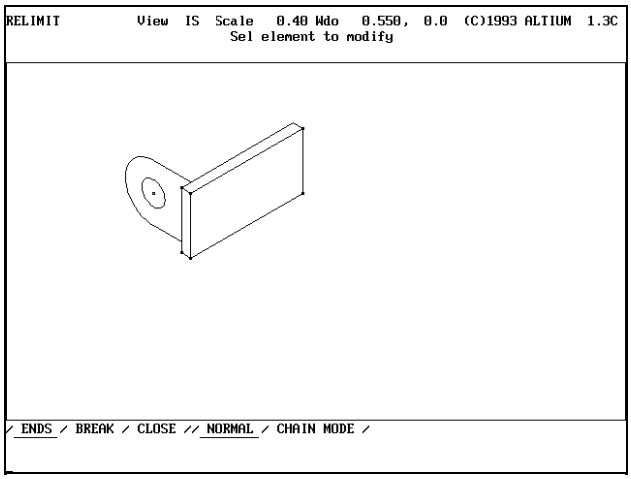

Figure 123 Screen showing the two lines RELIMITed to the plate.

SELECT FKey WINDOW and restore /2/. SELECT FKey AUX VIEW and SELECT /3-VU/. SELECT the line that would represent the back face of the front bracket. Toggle to FKey WINDOW and restore /3/. Toggle back to FKey AUX VIEW and SELECT the small circle, the large arc and the top horizontal line. Toggle to FKey window and restore /5/. Compare your screen with figure 124.

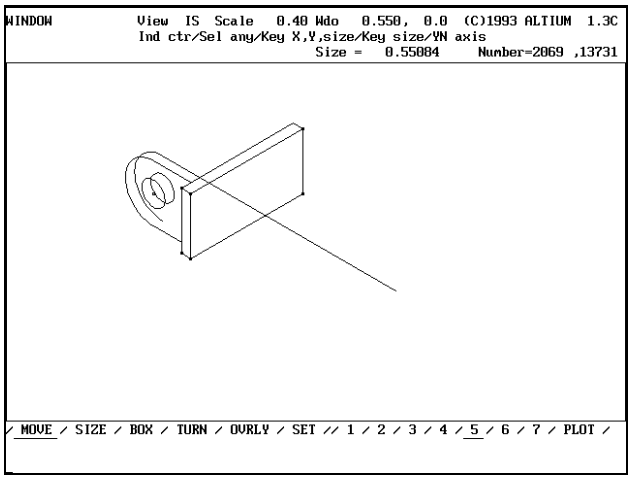

Figure 124 Elements to draw the back face of the front bracket.

Using FKEy RELIMIT, change the endpoint of the line that represents the back face of the front bracket to the back face of the plate. (See fig 125.)

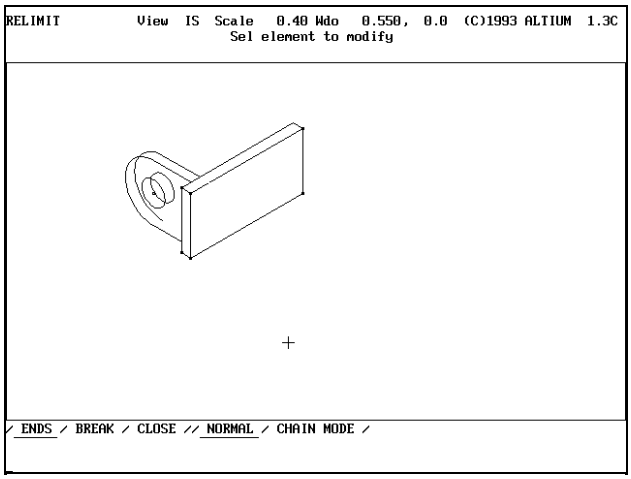

Figure 125 Back face of the front bracket RELIMITed.

Using FKey WINDOW /BOX/, make the section that represents the front bracket fill the screen. SELECT FKey LINE and make sure /PT TO PT/ and /LENGTH/ are active. SELECT the two Ellipses that make up the rounded edge of the front plate. A line should appear connecting the two. Toggle to FKey WINDOW and /BOX/ in for a very close look at this line. See figure 126.

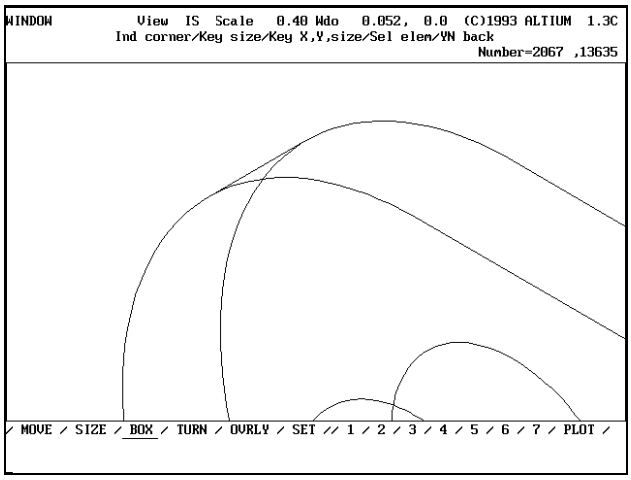

Figure 126 /PT-PT/ LINE drawn joining the two ellipses.

With FKey WINDOW still active, key in the value .1 to make your screen a little larger. SELECT FKey RELIMIT. We need to RELIMIT the rear ellipse to the line we just drew. From this viewing angle, only the top part of the ellipse should be visible. SELECT the rear ellipse near the bottom of the screen as that is the end we wish to modify. SELECT the line we just drew. The ellipse should relimit itself to the line as in figure 127.

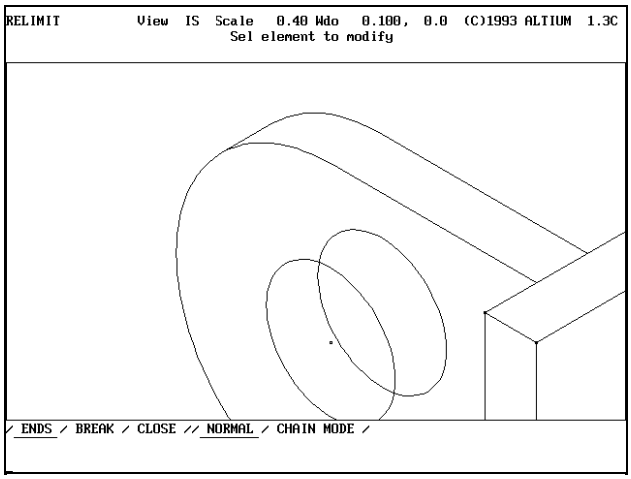

Figure 127 Ellipse RELIMITed to the /PT-PT/ line.

Toggle to FKey WINDOW and SELECT the point at the center of the ellipse that represents the projected small hole. SELECT FKey RELIMIT. SELECT the rear ellipse near the top and the SELECT the front ellipse near it's top. The one end of the rear ellipse RELIMITs itself to the other. The ellipse that was changed remains active (color green). SELECT the same ellipse but at the opposite end. SELECT the front ellipse near it's bottom. Compare your screen with figure 128. If it matches, FILE your drawing. If it does not, SELECT FKey RELIMIT and try again.

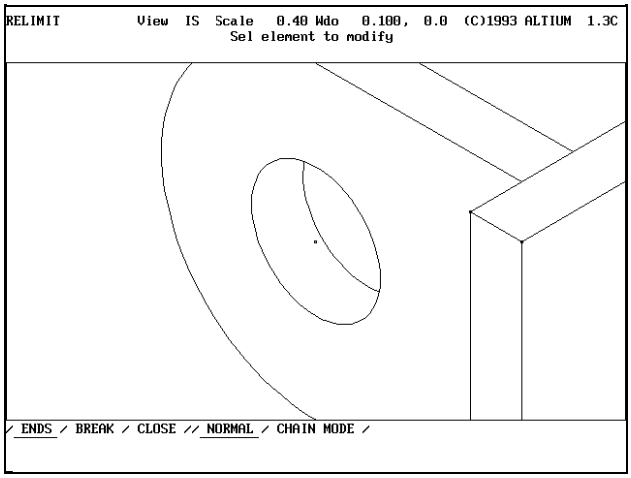

Figure 128 Hole completed.

Since we have drawn the front bracket, we should be able copy this geometry to make the rear bracket. We will use FKey GROUP /TRAP/ and the /TRANS/ to define our group. However, we need to know where we should move the copy of the front bracket. We need a reference point. Using FKey AUX VIEW, this becomes quite easy. Remember drawing the point at the center of the small circle in VIEW FR? All we need to do is project this point into VIEW IS using the front plane of the rear bracket. This may seem confusing, but once you use this technique once or twice, it becomes very simple.

Toggle to FKey WINDOW and SELECT /2/. This will restore VIEW PV to your screen. SELECT FKey AUX VIEW and then SELECT /3-VU/. SELECT the line that represents the front face of the rear bracket, (see figure 129).

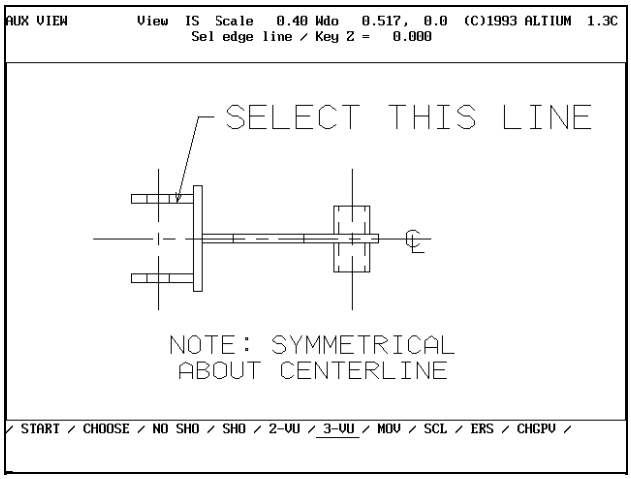

Figure 129 Line to be used as the front face of the rear bracket.

Toggle to FKey WINDOW and SELECT /3/. Toggle back to FKey AUX VIEW (make sure /3-VU/ is still underlined and the program prompt area says " Sel point / Sel element ".) SELECT the point at the center of the small circle. Toggle to FKey WINDOW and SELECT /5/. There should be a point all by itself. (See figure 130).

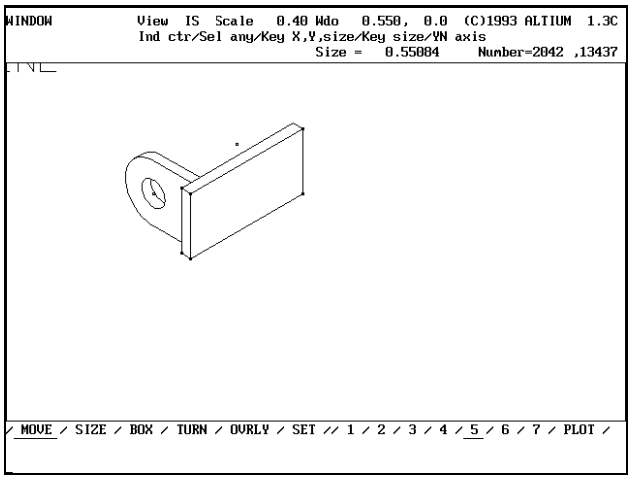

Figure 130 Point projected into VIEW IS.

Using FKey GROUP /TRAP/, define a group (either with YN rectangle, or by indicating a trap polygon) consisting of only the elements making up the front bracket. Be sure not to get any of the lines that make up the plate. Once you have defined your group, RE-SELECT FKey GROUP, and SELECT /TRANS/. SELECT the option /COPY/ as we wish to move a copy of the front bracket. (/COPY/ will change to /NO-COPY/ if you have SELECTed it properly). If all the elements of the front bracket are in green, press the YN button to accept this as the group. If not all the elements are green, SELECT the ones you missed before you press YN. SELECT the point that appears in the center of the ellipse in the front bracket as your pivot point. SELECT the point we just projected once to define the DX value we need, and then SELECT the same point again to define the DY value. A copy of the front bracket should appear. SELECT /EXIT/ to disband the group and restore all elements to a white color. Using FKey WINDOW, /BOX/ in to get a

good look at two brackets. (See figure 131.)

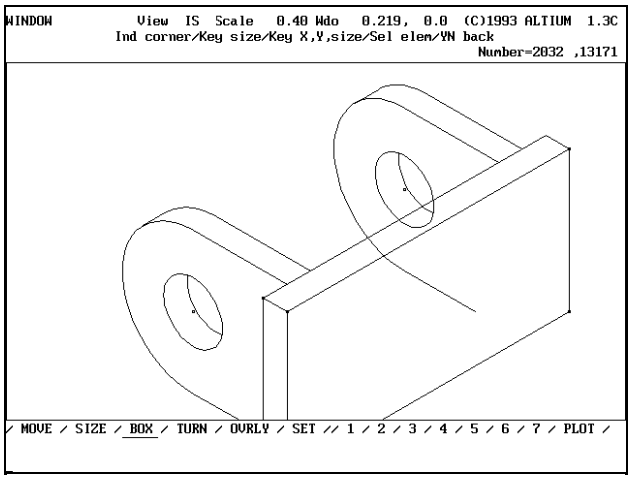

Figure 131 Rear bracket drawn.

Now we have to do RELIMIT or ERASE elements that are not quite right. First we should RELIMIT the three ellipses. The two that make up the hole should be partially blocked by the plate, while the front edge of the rear bracket should be partially obscured as well. After the ellipses are adjusted we will need to /ERASE/ a line. With FKey WINDOW, /BOX/ still active, /BOX/ in closer, such that the rear bracket fills the screen. SELECT FKey RELIMIT. SELECT the ellipse that is the front of the rear bracket near it's bottom and then SELECT the line that represents the back face of the plate. The ellipse should RELIMIT itself to this line. SELECT /CHAIN MODE/ from the bottom of your screen. Since all the ellipses are to be RELIMITED to the same line, we should be able to use submenu item /CHAIN/. SELECT the ellipse that is the front of the hole at about the 7 O'clock position. SELECT the ellipse that represents the back of the hole near the end that you need to have trimmed. SELECT the top part of the ellipse that is the front of the hole near the 2 o'clock position. See figure 132 for the locations to be SELECTED and then compare you screen with figure 133.

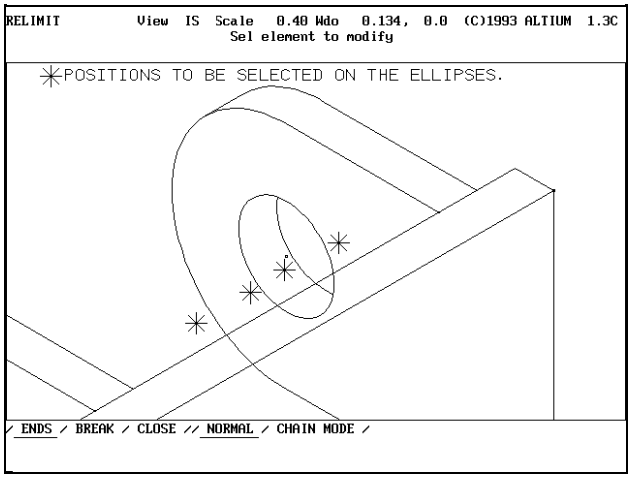

Figure 132 Positions on the three ellipses that are to be SELECTed.

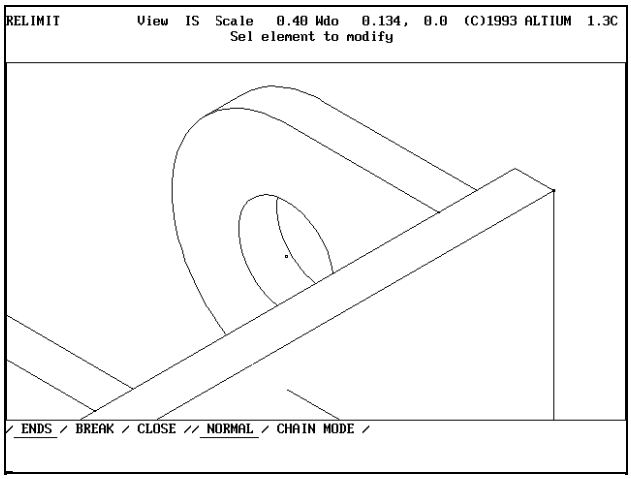

Figure 133 Ellipses as they should be RELIMITed.

Toggle to FKey WINDOW and key in the value 0.3. There is a line that needs to be ERASEd. SELECT FKey SHOW and SELECT /ERASE/. SELECT the line that is not needed. See figure 134 for the finished perspective of the front and rear brackets and plate.

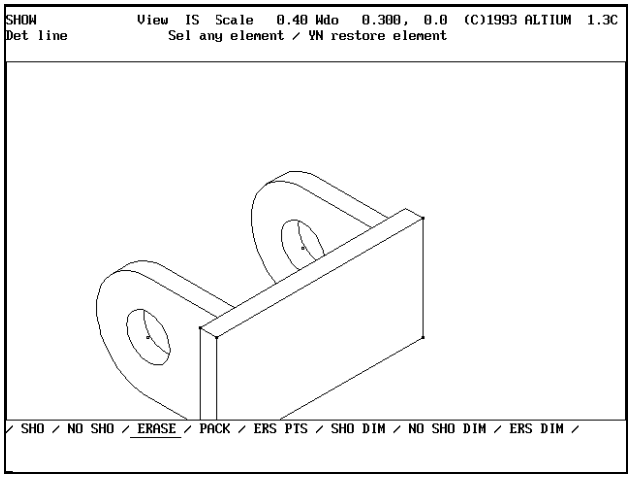

Figure 134 Finished perspective.

We now need to add the plate containing the slot. At the same time, we will project some of the geometry that we will need to add the cylinder on the end. We will use the same techniques that worked for producing the front and rear brackets. SELECT FKey WINDOW and SELECT /3/. Your screen should show VIEW FR. SELECT FKey AUX VIEW and make sure /CHOOSE/ is active. SELECT any element in VIEW FR. AT the top, your screen should say " View FR ". SELECT FKey GROUP and SELECT /TRAP/. Press YN to allow TRAPping using a rectangle. INDICATE just above the part and to the right of the two parallel vertical lines that represent the plate and then INDICATE below and to the extreme right (see figure 135).

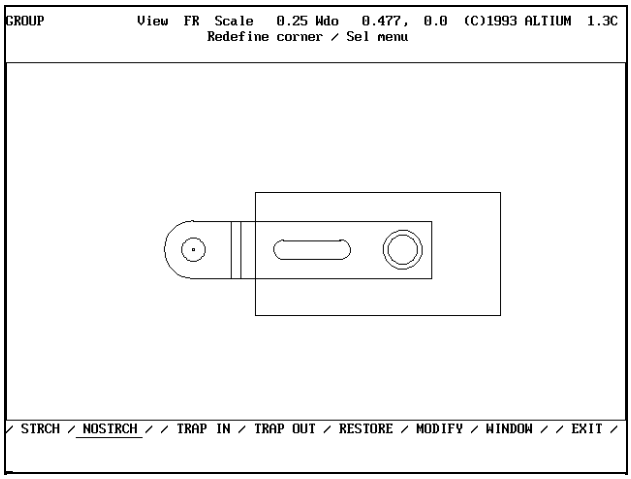

Figure 135 Rectangle to be used for GROUP /TRAP/.

SELECT /TRAP IN/. Your screen should change to display only the elements on the right of VIEW FR, including the slot and the two circles.SELECT /RESTORE/ to redraw all the elements. SELECT FKey AUX VIEW and make VIEW IS your active view. Toggle to FKey WINDOW and SELECT /2/. Your screen should show VIEW PV. Toggle back to FKey AUX VIEW (press the SELECT and INDICATE buttons on your mouse at the same time.) SELECT sub menu item /3-VU/. SELECT the bottom horizontal line that represents the front of the plate that has the slot in it.(see figure 136).

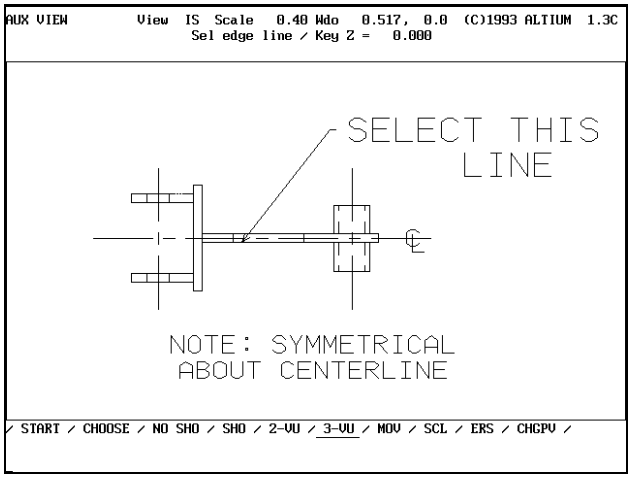

Figure 136 Horizontal line to be used as the edge line.

Press the YN button to project the group into VIEW IS. SELECT /3-VU/ again. The front horizontal line should change from green to white. What we have done is restarted the process and will project individually SELECTed elements into VIEW IS. SELECT the top

horizontal line that represents the back face of the plate containing the slot. Toggle to FKey WINDOW and SELECT /3/. While SELECTing each element individually, look at the top of your screen. MICRO CADAM tells you what you have SELECTed. SELECT arc that is the left part of the slot. MICRO CADAM tells you it "Det circle". SELECT the horizontal line that is the bottom of the slot. You see the phrase "Det line" appear in the top left corner of your screen. Continue by SELECTing the top horizontal line of VIEW FR, the extreme right vertical line, checking for the response from the software. See figure 137 for all the elements that need be SELECTed.

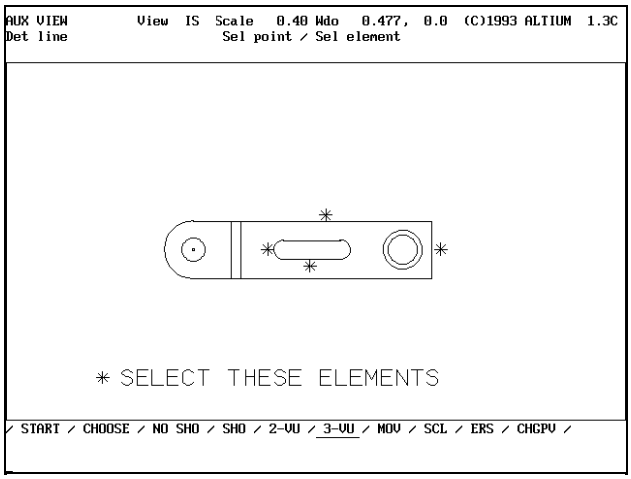

Figure 137 Elements to be SELECTed.

Toggle to FKey WINDOW and SELECT /5/. Take a look at your screen and compare it to figure 138. If you are missing any elements, toggle back to FKey AUX VIEW, and re-SELECT /3-VU/ project the missing elements.

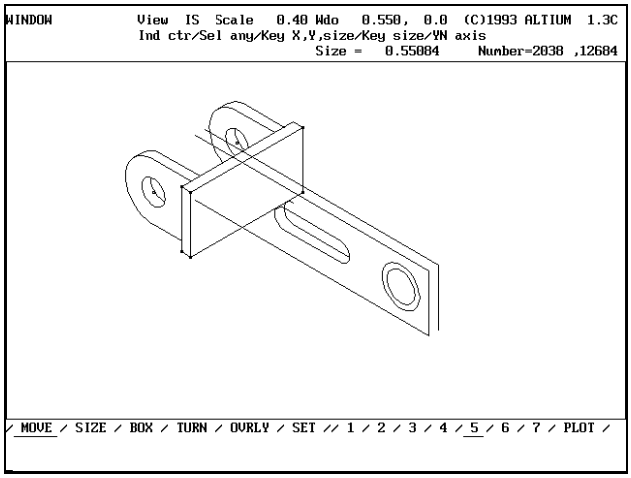

Figure 138 Elements projected into AUX VIEW IS.

We need to RELIMIT the three long lines that represent the top and bottom of the plate containing the slot. SELECT FKey RELIMIT. SELECT one of the lines to be changed to answer the program prompt "Sel element to modify", and SELECT the line that represents the top edge of the plate in response to "Sel intersecting element". SELECT the other line at the top and RELIMIT it to the same edge line. SELECT the bottom line and RELIMIT it to the bottom edge of the plate. We need to RELIMIT the ellipse that represents the back edge of the slot. RELIMIT it to the line that represents the top front edge of the slot. See fig 139 for the lines as they should be displayed.

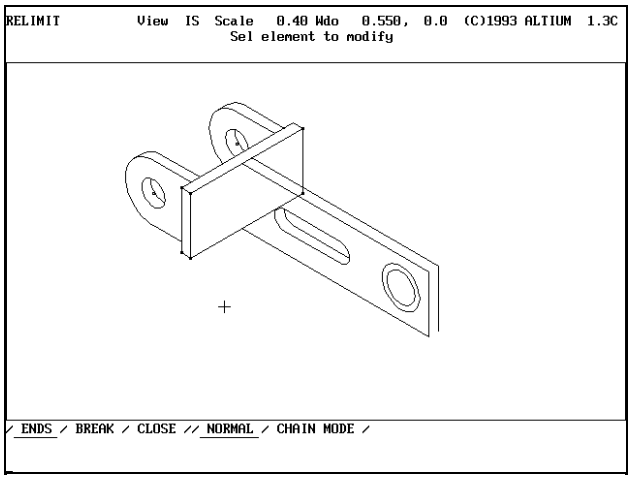

Figure 139 Slot-plate lines RELIMITed.

We still have two more lines to RELIMIT. The line that represents the bottom of the solid plate stops where it intersects the bottom of the plate containing the slot. Also, the back edge of the solid plate should be RELIMITed to the top rear edge. Try these on your own and then compare your results with figure 140.

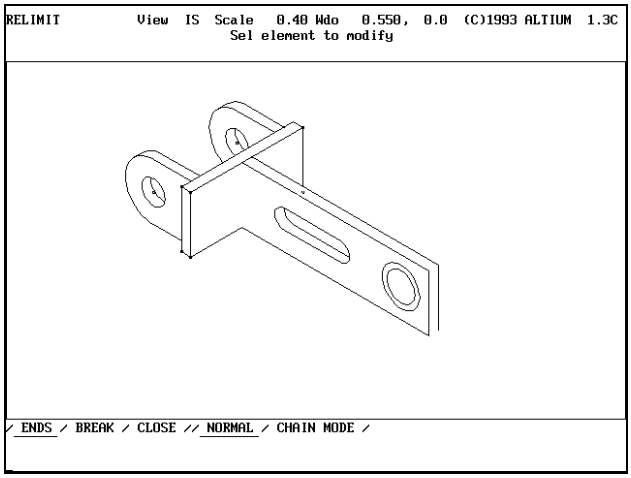

Figure 140 Additional lines of the solid plate, RELIMITed.

To finish the plate containing the slot, we must draw 3 /PT-PT/ lines. These lines will finish the back corners of the plate and will show the line that marks the meeting of the this plate and the solid one. Again, you should be able to do these lines on your own. SELECT FKey LINE and make sure /PT-PT/ and /LENGTH/ ARE ACTIVE. Use the "Indicate end" option to tell MICRO CADAM where to start and finish your lines. Compare your screen with figure 141 when you feel you are done.

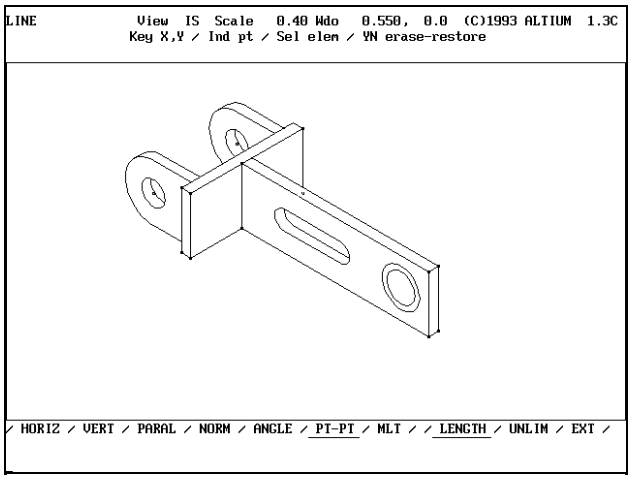

Figure 141 Three lines drawn to complete the plate containing the slot.

All that is left is to draw the cylinder at the bottom of the swing arm. We already have projected some of the required geometry into VIEW IS. What we need to do next is project the circles that represent the front and back of the cylinder into VIEW IS.

SELECT FKey AUX VIEW and SELECT submenu item /3-VU/. toggle to FKey WINDOW and SELECT /2-VU/. Toggle back to FKey AUX VIEW and SELECT the bottom horizontal line that represents the front plane (edge) of the cylinder. Toggle to FKey WINDOW and SELECT /3/. SELECT /BOX/ and make the two circles fill the screen. SELECT submenu item /SET/, and then SELECT /6/. You will need to come back to this window set in a few moments. Toggle back to FKey AUX VIEW and SELECT both of the circles. Toggle to FKey WINDOW and SELECT /2/ to restore VIEW PV to your screen. Notice that the bottom horizontal line is still green. Toggle back to FKey AUX VIEW and SELECT the submenu item /3-VU/ again. The bottom line should return to the color white. SELECT the top horizontal line that represents the back face of the cylinder. Toggle to FKey WINDOW and SELECT /6/. Your screen should show your previously saved close-up view of the two circles. Toggle back to FKey AUX VIEW and SELECT only the outside circle. Toggle to FKey WINDOW and SELECT /5/ to compare your progress with figure 142.

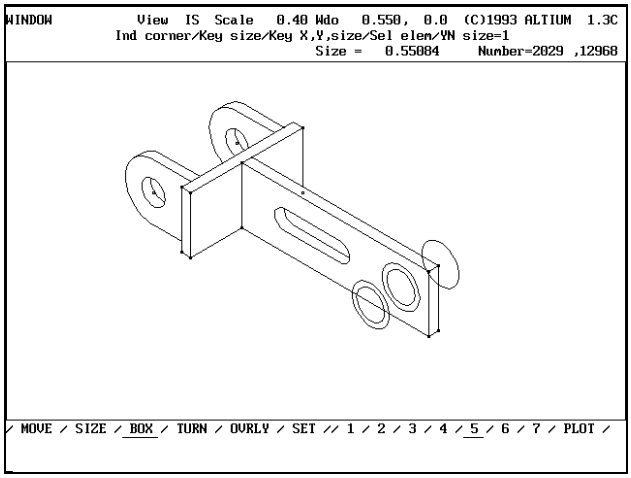

Figure 142 Circles projected into VIEW IS.

/BOX/ in closer such that the 5 ellipses are visible on your screen. We projected the small inside circle that is on the face of the plate containing the slot to see if it would be visible when the front face of the cylinder was projected. Notice how part of the back face of the hole in the brackets were visible. Since these two ellipses do not intersect, we can erase the one that would not be seen. SELECT FKey SHOW and erase the small ellipse. (See figure 143.).

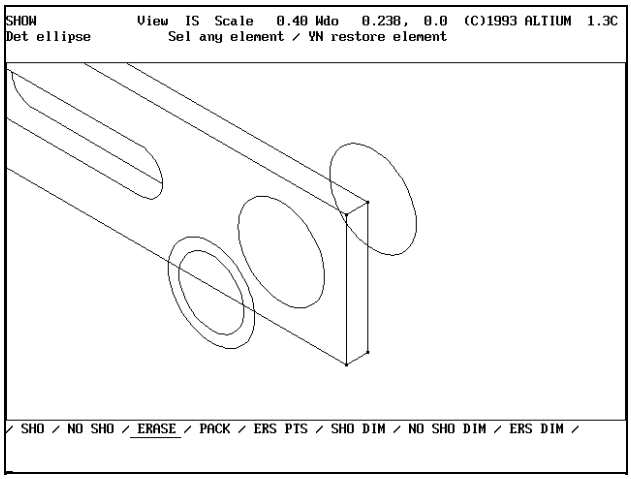

Figure 143 Ellipse erased.

Now all that is left to do is to draw the sides of the cylinder. SELECT FKey LINE and SELECT /ANGLE/ and /UMLIM/. SELECT anyone of the three large ellipses near their top.Since this is a standard 30 deg isometric perspective, we can key in the value 30 and draw a 30 degree line. SELECT the same ellipse but at the opposite end. Press YN to accept the value 30. Another unlimited line appears tangent to all three of the ellipses. (see figure 144)

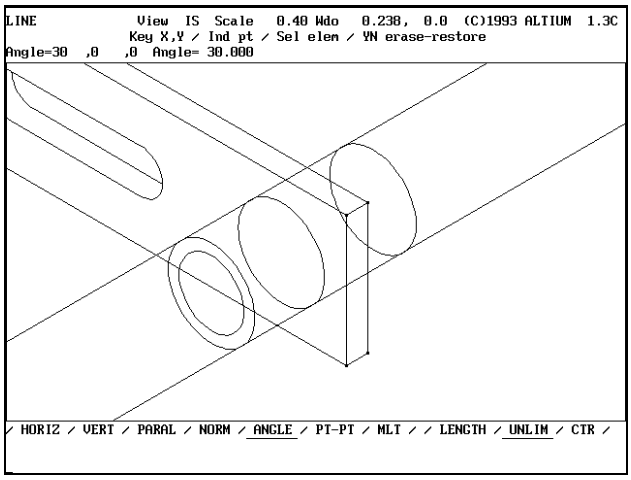

Figure 144 Two 30 degree lines tangent to the ellipses.

It is now just a case of RELIMITING all the elements to their intersections. The 30 degree lines represent the wall of the cylinder. This cylinder is broken around the plate containing the slot. We need to /BREAK/ these lines so we can RELIMIT them properly. SELECT FKey RELIMIT and SELECT /BREAK/. SELECT the top 30 degree line somewhere between the back and middle ellipses. SELECT the bottom 30 degree line the same way. A small break should appear. These two lines have now become four lines. While we have /BREAK/ active, we need to adjust the bottom line of the plate containing the slot. We will not be able to see the section that runs through the front ellipses. SELECT submenu item /BRK AROUND/ (BReaK AROUND). SELECT the line we need to /BREAK/ and then SELECT the large ellipses at the front of the cylinder. Compare your screen with figure 145.

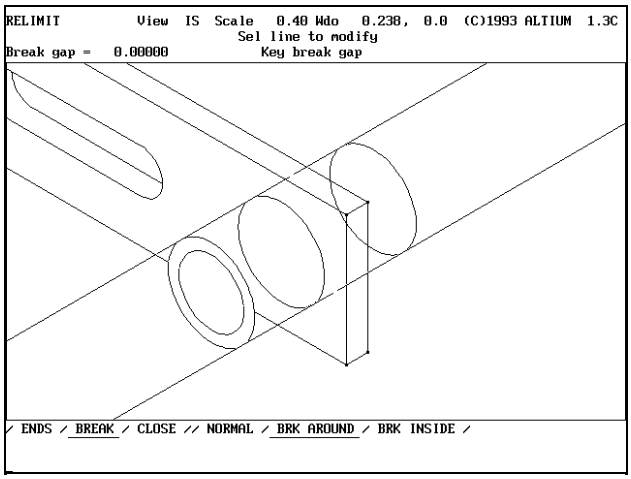

Figure 145 Two 30 degree lines with a /BREAK/ in them and the front line /BRK AROUND/ the front ellipse.

We will leave it to you to RELIMIT or CORNER the remaining geometry. Always watch the program prompt area for hints as to what is to come next. Use the "YN restore" option in case of mistakes. And be aware of the effect of SELECTing elements, when using FKey RELIMIT, in different locations. See figure 146 for the completed VIEW IS. You will need to RELIMIT the line where we used the /BRK AROUND/ feature to match figure 146.

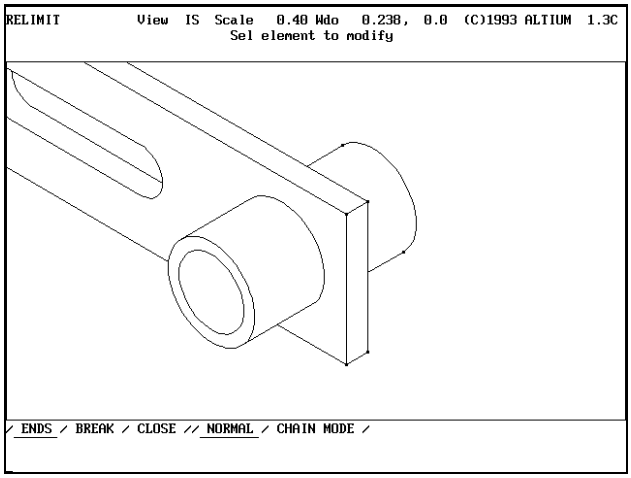

Figure 146 Finished cylinder.

SELECT FKey WINDOW and SELECT /1/ to view your finished drawing.

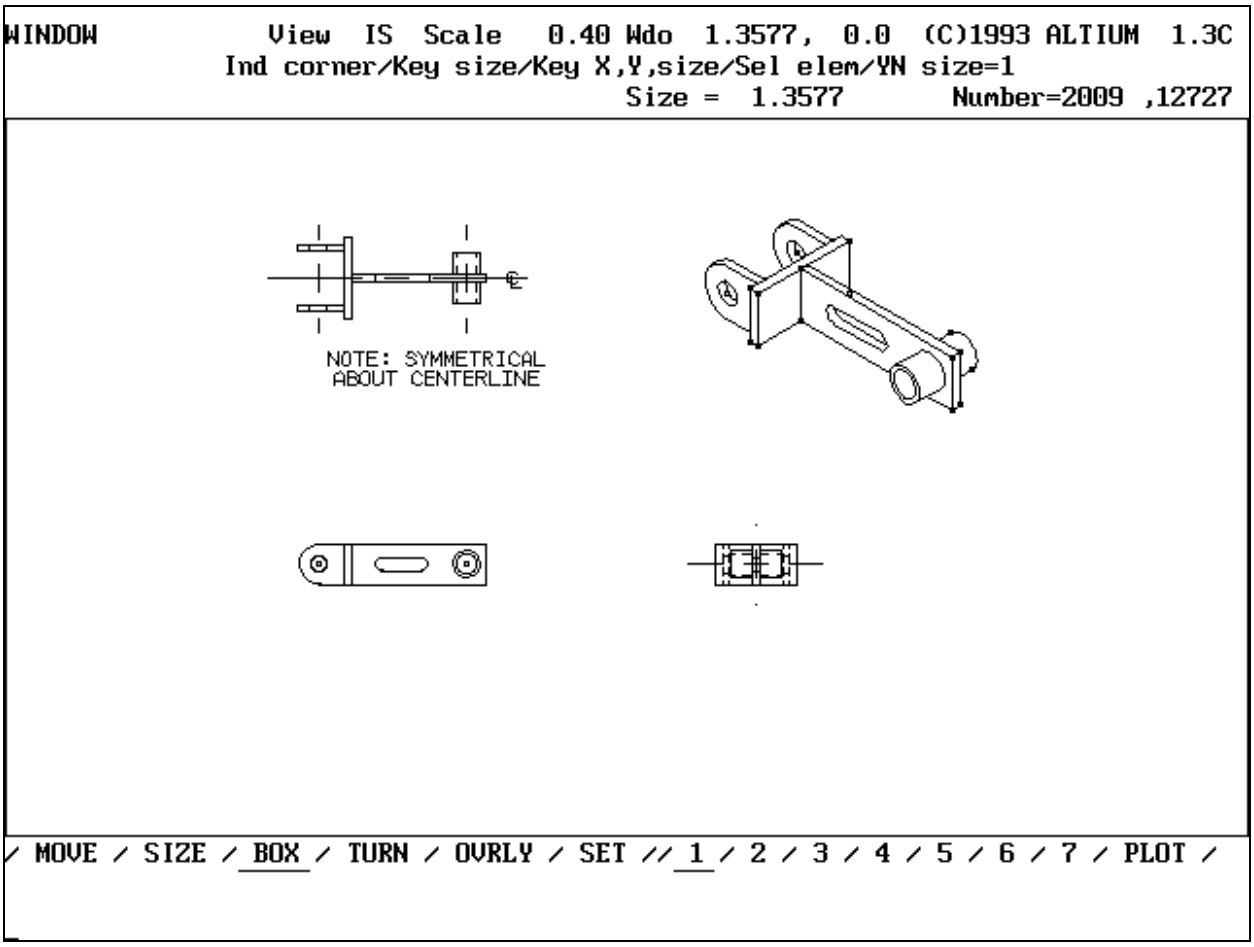

Figure 147 The finished drawing.

CHAPTER 8

FKey FILE

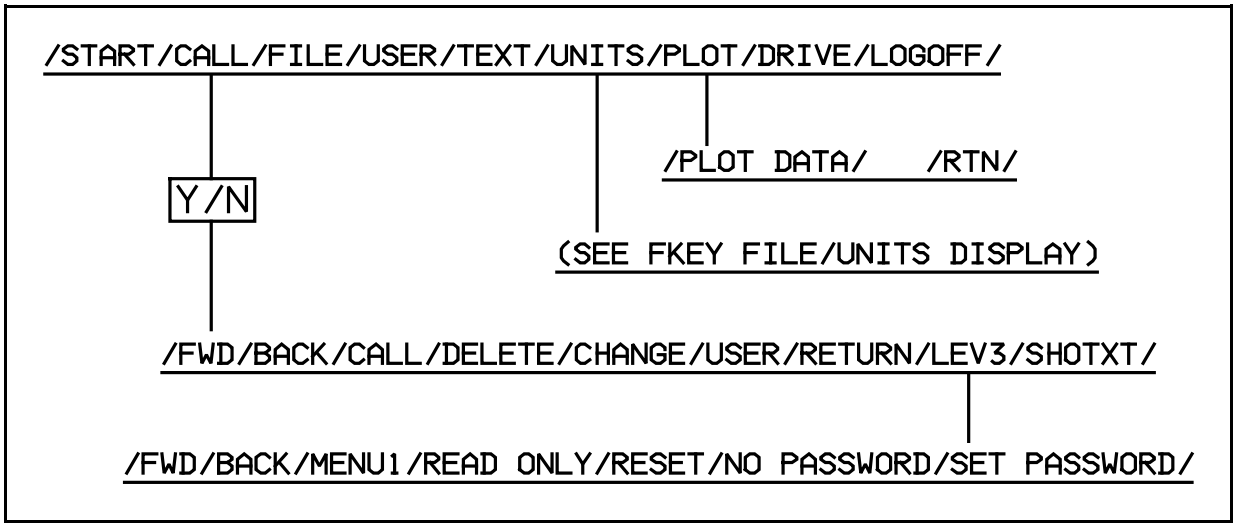

Figure 1 Menu Item Tree for FKey FILE

FKey FILE is a multipurpose function key. Its' submenus include the following options:

· /START/ Starts a new Micro CADAM model. Key in up to 20 characters for the model name (the model name is broken into two fields of 16,4 characters; the PN,FN (Part Name,Find Name)) and press the ENTER key to start a new Micro CADAM model.

· /CALL/ After SELECTING submenu /CALL/ press the Y/N button on the mouse to verify that you want to actuate the submenu item. After pressing the Y/N button you are presented with another display screen which in turn has submenu items. These submenu items allow you to do the following:

- Page forward in a list of models that has more than one page
- Page backward in a list of models that has more than one page
- Retrieve (i.e. call) a model from a hard disk or floppy disk and load it into your computer memory.
- Delete a model from the current user
- Change the name of a model within the same group,user.
- Change (i.e. transfer) a model from one user to another user

- Display a list of users in your present group and allow you to change to another user (i.e. make another user active).
- Return to your front screen if you decide you want to abort submenu /CALL/.
- Climb one level higher (to level 3) in order to perform the following actions:
  - Page forward or backward in a list of models that has more than one page
  - Return to the previous menu
  - Make a model read-only (to prevent its accidental erasure)
  - Remove an existing read-only tag from a model
  - Add a password to a model (to protect it from being called up by anyone not knowing the password)
  - Remove an existing password.
- Display up to 32 characters of descriptive text on the screen (beside either one model or all models)

· /FILE/ Allows you to file a copy of your present model from your computer memory onto a hard disk or floppy disk. Please note that the file option is a combination of FKey FILE and submenu /FILE/. FKey FILE is a general function key and Submenu /FILE/ specifically tells the system to file the drawing. **DRAWINGS ARE NOT BACKED UP OR FILED AUTOMATICALLY. YOU MUST FILE THE DRAWING ONTO THE DISK YOURSELF.**

· /USER/ To change to a new user within the same group

· /TEXT/ Add descriptive text to a model. This text can be viewed either by selecting submenu /TEXT/ from the main menu, or selecting submenu /SHOTXT/ from the /CALL/ submenu.

· /UNITS/ This allows you to do the following:

- Select the drawing units. Units may be any of the following:
  - INCH
  - FEET
  - MM
  - CM
  - METER
  - OTHERS (define your own units)

- Select the active dimensioning standard. The standard may be either of the following:

  - STANDARD (CADAM standard dimensions)
  - ISO (International Standard Organization dimensions)

- Select the View Convention. The View Convention may be either of the following:

  - 1ST ANGLE (The view convention used in Europe)
  - 3RD ANGLE (The view convention used in North America)

- Select the HATCH/FILL options: The options may be any of the following:

  - OFF (Hatch and Fill display is turned off)
  - ON (Hatch and Fill display is turned on)

- Select the Mainframe Compatibility. The compatibility may be any of the following:

  - DIT/SYM TXT NO SCL (May be used with drawings transferred from mainframe CADAM)
  - DIT/SYM TXT NORMAL (The normal default mode)

· /PLOT/ Allows you to add plot data to a drawing to tell the system which part of the drawing to plot. The plot data submenu provides you with the following information or performs the following actions:

- The plot angle
- The load point of the plot
- The scale of the plot (normally 1.0 but could be different)
- The note scale (i.e. scale of notes on the plot)
- The plot's height
- The plot's width
- Erase all plot data
- Display the scaled height and width of the plot.
- File the model with the newly attached plot data. This duplicates FKey FILE submenu /FILE/.

· /DRIVE/ Allows you to change the drive where your models are called from or filed to. Drives C, D, E, F, etc. normally refer to hard disk drives. Drives A and B normally refer to floppy drives. The procedure for filing and calling drawings is identical regardless of the drive designation.

· /LOGOFF/ Allows you to end a work session, leave Micro CADAM and return to the DOS operating system.

Fkey FILE allows you to do many things that are basic to running Micro CADAM. Information on how to logon to Micro CADAM and start a drawing, as well as specific information on the submenu options are listed with page numbers as follows:

FUNCTION KEY FILE		
FILE ITEM	DESCRIPTION	PAGE NO.
STARTING MICRO CADAM AND CALLING UP AN EXISTING DRAWING	**How to start Micro CADAM and CALL up an existing model.**	8-7
Submenu /START/	**Information of FKey / FILE / submenu / START /** (How to start a new empty drawing)	8-15
Submenu /CALL/	**Information of FKey / FILE / submenu / CALL /** (How to call up existing drawings. How to use the submenu utilities).	8-19
Submenu /FILE/	**Information of FKey / FILE / submenu / FILE /** (How to file a drawing).	8-29
Submenu /USER/	**Information of FKey / FILE / submenu / USER /** (How to change from one user to another)	8-31
Submenu /TEXT/	**Information of FKey / FILE / submenu / TEXT /** How to attach descriptive text to your drawing. How to display the descriptive text).	8-33
Submenu /UNITS/	**Information of FKey / FILE / submenu / UNITS /** (How to set model units, dimensioning standard, etc.)	8-35
Submenu /PLOT/	**Information of FKey / FILE / submenu / PLOT /** (How to add plot data to a drawing. How to view and change plot data).	8-39
Submenu /DRIVE/	**Information of FKey / FILE / submenu / DRIVE /** (How to file your drawing).	8-43
Submenu /LOGOFF/	**Information of FKey / FILE / submenu / LOGOFF /** (How to logoff from MICRO CADAM and return to DOS)	8-45

FKey FILE

STARTING MICRO CADAM

AND CALLING UP AN

EXISTING DRAWING

Micro CADAM may be loaded onto any of your computers hard disk drives (e.g. drive C:, D: or E:, etc.). For the purposes of this discussion we will assume that Micro CADAM is loaded on drive C and that you are presently at your DOS prompt (i.e. C:>\ ). (If you have loaded Micro CADAM onto a different drive, every time you read drive C:, replace the letter C with the letter of the drive where the program is loaded.

START MICRO CADAM:

Micro CADAM may be started either of the following ways:

1) The manual method.

Change to the Micro CADAM directory by typing the command ***cd c:\mcadam*** and then press the ENTER key on your keyboard. (If MICRO CADAM is loaded on a another drive, change the drive letter **C** to the letter of the drive where MICRO CADAM is loaded!)

Start the Micro CADAM program by typing the command ***mcadam*** and press the ENTER key on your keyboard.

2) The menu method.

This method uses the MICRO CADAM menu system provided, and is the default method if you followed the installation routine to the letter and did no customizing. When you type ***2cad*** your system is reconfigured to run the MICRO CADAM software, and will automatically reboot to load the new configuration. After your system has rebooted, the menu shown in Figure 2 at the right will appear.

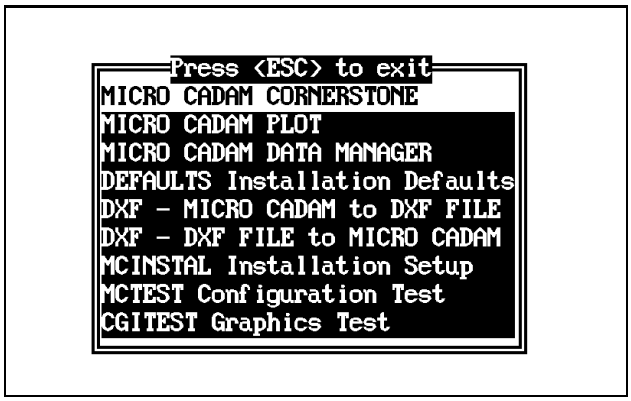

Figure 2 MICRO CADAM menu screen

To start MICRO CADAM, highlight the menu item "MICRO CADAM CORNERSTONE" and press the enter key on your keyboard.

```
                                                    (C)1993 ALTIUM  1.3C
                    Key group,user / Sel menu

                    MICRO CADAM CORNERSTONE
                    **** FREE VERSION ****

                     COPYRIGHT 1993 ALTIUM
                        AN IBM COMPANY
                    1935 N. BUENA VISTA ST.
                       BURBANK, CA 91504

                    THIS IS A FREE VERSION OF
                   MICRO CADAM CORNERSTONE 1.3C
            ***THERE ARE NO RESTRICTIONS ON USE***
             ALTIUM RETAINS OWNERSHIP OF THIS S/W
                   ALL RIGHTS RESERVED
              YOU ARE ENCOURAGED TO COPY AND
             FREELY DISTRIBUTE THIS SOFTWARE!

/ LOGOFF /
```

Figure 3 This is the initial logon screen display after starting MICRO CADAM

Whichever method you use to start MICRO CADAM, the result will be the same. Your screen will go blank for a few seconds, the Micro CADAM program will load into memory, and then the display screen will appear as shown in Figure 3 on page 8-9.

KEY IN THE GROUP,USER:

You will notice a message near the top of the screen that says ***Key group,user / Sel menu***. Micro CADAM wants to know which group and user it will be working in (refer to the chapter on CONCEPTS for more information on groups and users). Type in ***CAD,DEMO*** and press the ENTER key on your keyboards to make group ***CAD*** and user ***DEMO*** the default group and user. The display screen will now change to that shown in Figure 4 on page 8-10. Notice that more information has appeared at the top of the screen. It now displays the active drive, group and user. See the chapter on concepts for information on the other display lines.

```
FILES            View  PV  Scale  1.000 Wdo  1.0000,  0.0  (C)1993 ALTIUM  1.3C
                           Key filename /  YN call
Id=                                                  Drv:C Grp:CAD  Usr:QSTART

                          MICRO CADAM CORNERSTONE
                          **** FREE VERSION ****

                           COPYRIGHT 1993 ALTIUM
                              AN IBM COMPANY
                          1935 N. BUENA VISTA ST.
                             BURBANK, CA 91504

                          THIS IS A FREE VERSION OF
                         MICRO CADAM CORNERSTONE 1.3C
                    ***THERE ARE NO RESTRICTIONS ON USE***
                     ALTIUM RETAINS OWNERSHIP OF THIS S/W
                           ALL RIGHTS RESERVED
                       YOU ARE ENCOURAGED TO COPY AND
                      FREELY DISTRIBUTE THIS SOFTWARE!

/ START / CALL / FILE / USER / TEXT / UNITS / PLOT / DRIVE / LOGOFF /
```

Figure 4 This is the screen display after entering the group,user

Notice that the word FILES is displayed in the top left corner. When you first start a model (or drawing) FKey FILES is the default FKey. Also notice also that the submenu for FKey FILES appears near the bottom of the screen and that submenu /CALL/ is underlined by default.

TURN ON THE FKey (FUNCTION KEY) MENU:

Micro CADAM has two different types of Function Key Menus available. If you press the keyboard function key ***F1*** (i.e. the F1 along the top or side of your keyboard) the popup Function Key Menu display will be activated. (Note that the popup box appears wherever your cursor happens to be. The cursor is aligned with the WN (Window) FKey on the popup menu). The different function keys (e.g. FKey FILE, FKey ANALYZE, etc.) call be accessed by SELECTING the appropriate FKey box from this popup menu (i.e. move the mouse around until the cursor (the green cross) on the screen aligns with the required function key box on the menu,

```
FILES            View  PV  Scale  1.000 Wdo  1.0000,  0.0  (C)1993 ALTIUM  1.3C
                           Sel filename / Key page #
Id=                                                  Drv:C Grp:CAD  Usr:DEMO

                                                              PAGE 1
 P  4 WW2 PLANES
 P  4WD                  RO
    ANIMATION
 P  BENCH GRINDER
 P  BICYCLE         A1   RO
 P  BIKE            2
 P  ELECTRICAL SCHEMATIC
 P  F-16
 P  FLOOR PLAN
 P  FRONT ELEV
 P  GARAGE ADDITION      RO
 P  HOLLYHILL            RO
 P  HOTROD
 P  LOCOMOTIVE
/ FWD / BACK / CALL / DELETE / CHANGE / USER / RETURN / LEV 3 / SHOTXT /
```

Figure 5 This is the screen display after pressing the Y/N button on the mouse

and then press the SELECT button on your mouse (the left button). You must press the F1 keyboard function key to access this pop-up menu each time you want to use it.

The second type of menu appears as a sidebar and can be activated by pressing the ***CTRL-F1*** key combination. The CTRL-F1 key combination means to press and hold the CTRL key on your keyboard, and then, while holding the CTRL key, press the F1 key (the keyboard function key F1 along the top or side of your keyboard). The CTRL-F1 key is a toggle key and alternates between the sidebar and popup menu each time the key combination is pressed.

Refer to figure 9 on page 6-20, and figure 10 on page 6-21 in Chapter 6 (CONCEPTS) for illustrations of the two types of menus.

Use whichever menu you prefer, however you will find the popup menu more productive than the sidebar menu since the popup always appears where your cursor is located. With the sidebar

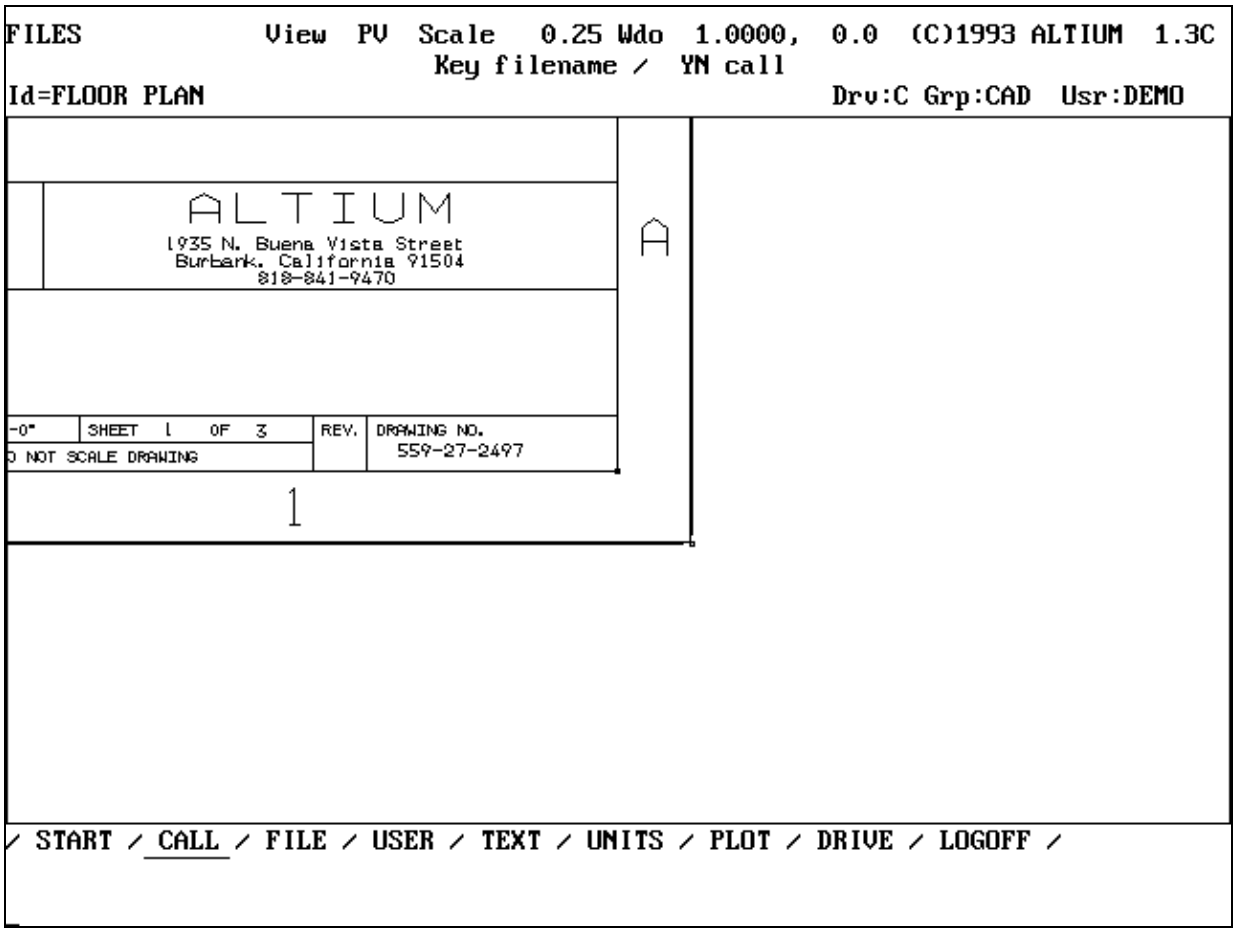

Figure 6 This is the screen display after selecting the model from the model display screen

you must move the cursor across the screen to the menu each time you want to select a function key, and then back to your drawing.

CALL UP AN EXISTING DRAWING:

Let's proceed now to call up (i.e. retrieve) an existing drawing. Near the top of the screen you will see the message prompt ***Key filename / YN call***. To call up an existing drawing you may either KEY in the model name (this could be up to 20 characters) and press the ENTER key, or you could press the Y/N button on your mouse (the right button on a 3 button mouse) and display a list of drawings in the active group and user. Lets perform the second option since we do not have to worry about making typing mistakes; we can simply find the model we want listed on the screen and select it. Press the Y/N button on your mouse. The display screen shown in Figure 5 on page 8-11 will now appear. Notice that a list of available models is

displayed on the screen. To CALL a model (i.e. retrieve it from the hard disk and load it into memory) simply move your cursor (that's the small green cross that moves on the screen as you move your mouse around) until it aligns with the model *FLOOR PLAN*. Once the cursor is aligned with this model, press the SELECT button on your mouse (the left button). The model will be called (i.e. retrieved) and loaded into memory. The display screen shown in Figure 6 on page 8-12 will now appear. The model loads onto the screen at a location known as paper center.

USE FKey WINDOW TO SEE THE ENTIRE DRAWING:

To see the entire drawing toggle into FKey Window and SELECT window set No. 1. To activate the window toggle press the SELECT and INDICATE buttons at the same time. SELECT the number **/ 1 /** displayed on the bottom menu and the entire drawing will appear as shown in Figure 7 on page 8-13. (Note that window set /1/ has been preset for this drawing). Press the

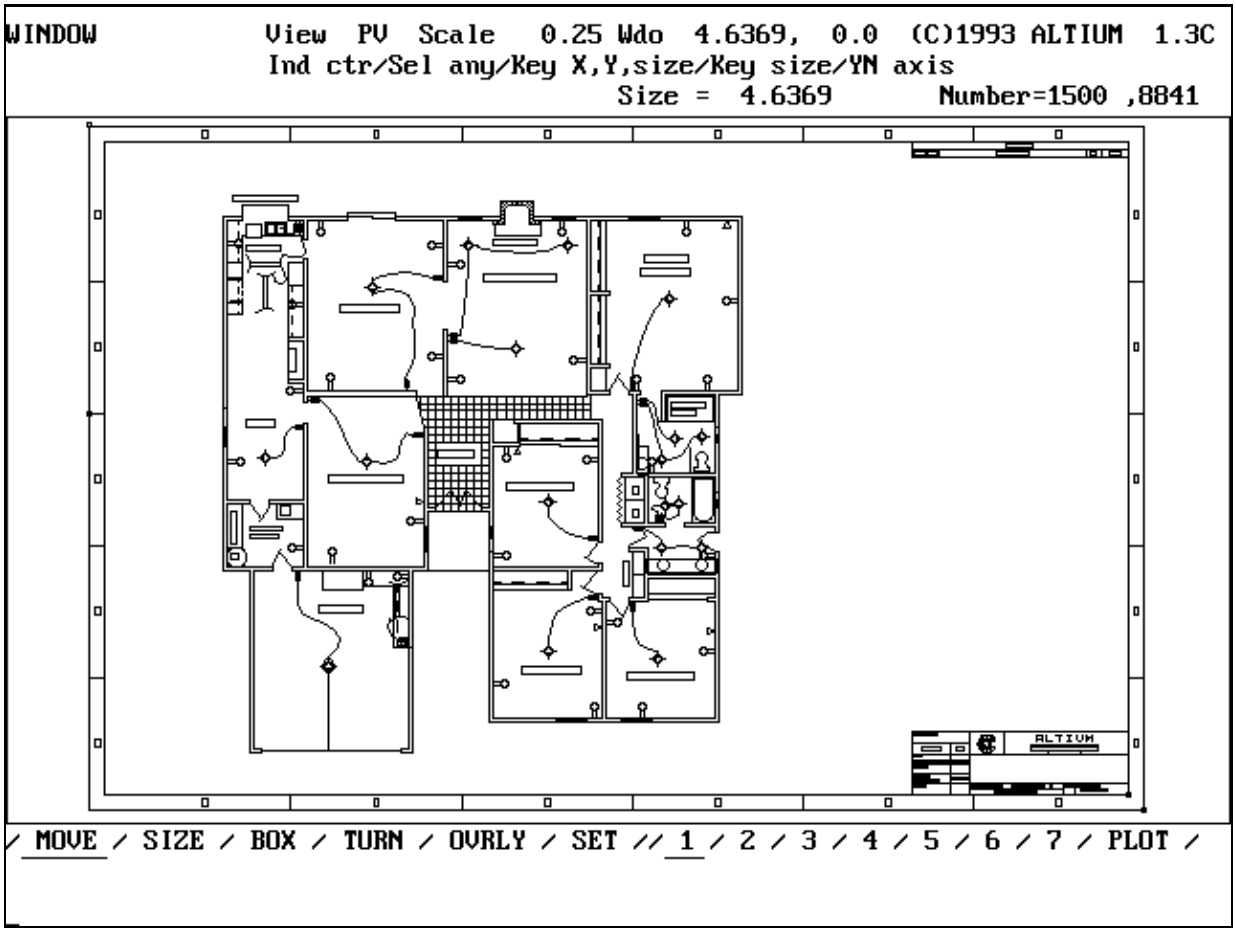

Figure 7 This is the screen display after selecting window set / 1 /

SELECT and INDICATE button on the mouse at the same time again and you will toggle from FKey WINDOW and back to FKey FILES.

Congratulations! You have now logged onto Micro CADAM and called up your first drawing.

FKey FILE

SUBMENU / START /

Submenu / START / allows you to start a new model. This new model is blank; in other words it initially contains no geometry or other information. You use / START / for training purposes and to do quick sketches, but most of your models will be started by referencing a starter format. Starter formats contains the outline of a sheet of paper including the title block with pre-attached text, pre-assigned plot data, units, auxiliary views and auxiliary view scales. Sample starter formats are located in CAD,FORMAT. Please refer to the chapter on plotting for more information on starter formats.

To start a new blank model, follow these steps:

- SELECT FKey FILE (if you are not already there)
- SELECT submenu / START /
- A menu prompt ***Key filename*** appears near the top of the screen.
- Type the filename and press the ENTER key on the keyboard. A filename can contain up to 20 characters and is broken up into 2 fields; the PN (part name) which contains 16 characters and the FN (find name) which contains 4 characters. The two fields are separated by a comma (i.e. ,). Spaces and DOS reserved characters like "?, *, ," can be freely used. Examples of valid Micro CADAM names follow:

  - 1234567890123456,1234
  - TEST HOUSING ,HOND
  - PLANT OUTLINE * ,????
  - STARTER ,A1
  - PRACTICE DRAWING,JOHN

Let's start a drawing called ***SAMPLE DRAWING,TEST***. Type in ***SAMPLE DRAWING,TEST*** and press the ENTER key on the keyboard.

After pressing the ENTER key a new blank model will be started. The axis arrows for View PV will appear in the middle of the screen and the new model name will appear near the top of the drawing. This display page is called the front page and is shown in Figure 8 on page 8-17.

NOTE: The words *model* and *drawing* are used interchangeably in this book.

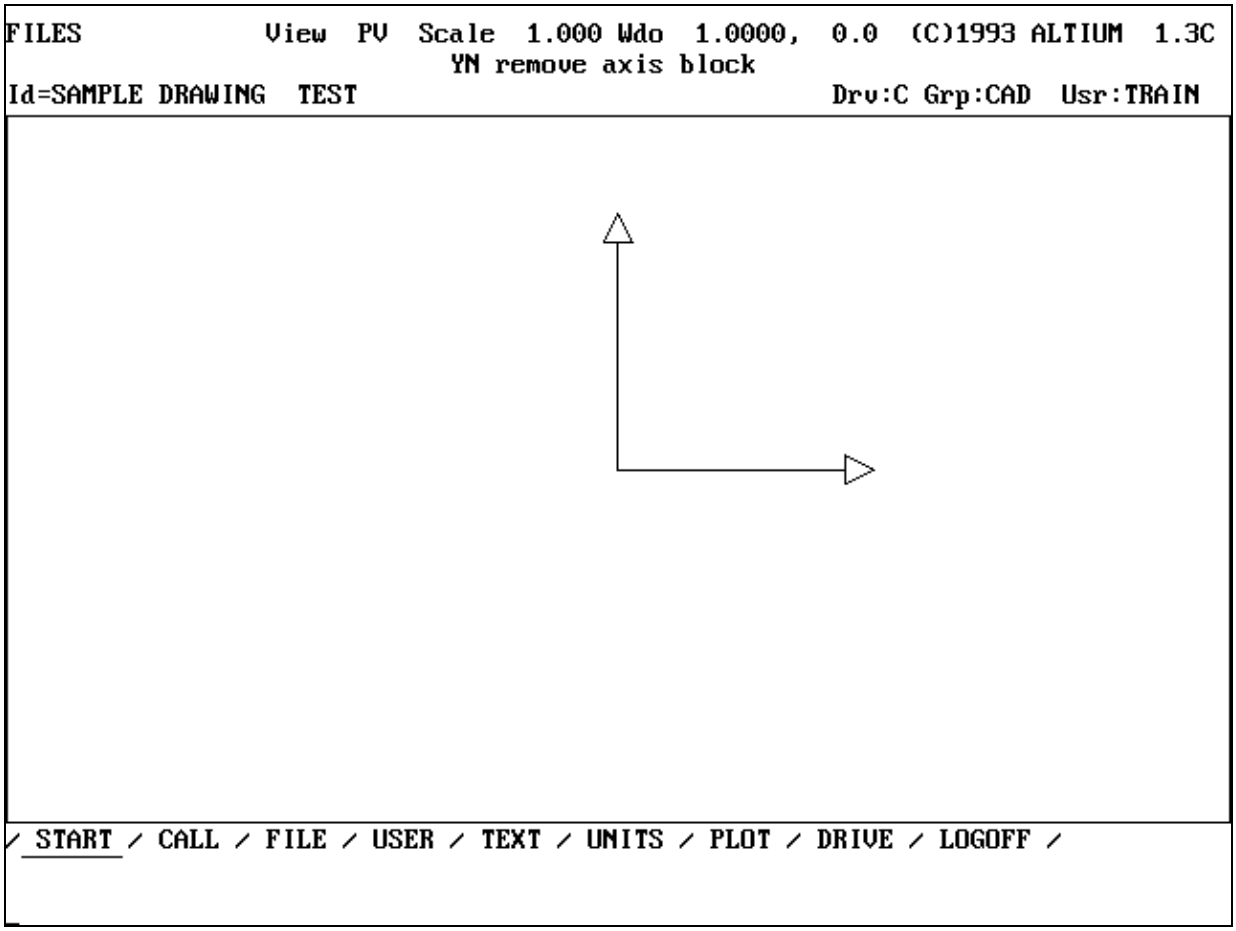

Figure 8 This shows the screen display for starting a blank drawing.

FKey FILE

SUBMENU / CALL /

FKey / FILE /, submenu / CALL / can access 3 different display screens which allow you to do a variety of different things. The relationship between the different display pages accessible from FKey FILE and submenu /CALL/, is illustrated in Figure 9 on page 8-21. As you look at this figure, pay close attention to the submenus on each of the four display pages, and the submenu item that is underlined by default.

The front page of your drawing is the one with the hotrod displayed on it. This is where you would create and edit geometry to construct your drawing.

THE FIRST DISPLAY PAGE:

The first display page is accessed by selecting submenu / CALL / and pressing the Y/N button on the mouse. A list of Micro CADAM models appears. The model names can comprise up to 20 characters for each name. The ***P*** to the left of some of the models means that plot data has been defined for that model. A model must have plot data defined to be plotted.

The numbers to the right of each model are a time and date stamp which is updated each time a model is filed. The number **194488165** is coded as follows:

- 1944 is the time in 24 hour format. In this case it means the model was filed at 19:44, or 7:44 pm

- 88 is the year the model was filed. In this case it means 1988.

- 165 is the day of the year the model was filed. In this case 165 means the 165th day of the year which is Monday, June 13th.

Submenu / FWD / BACK / (Display Page 1)

Just above the time and date stamp display, you can see ***Page 1*** displayed. This means we are on the first display page. To access other pages either SELECT submenu / FWD / or / BACK / or type a page number and press the ENTER key.

Submenu / CALL / (Display Page 1)

To CALL a drawing from the hard or floppy disk and load it into memory, make sure that submenu / CALL / is underlined, and then select the model on the screen. (i.e. align the cursor to the model you want called, and press the select button on the mouse). The model is then called from the disk and loaded into memory. You are returned to the front page.

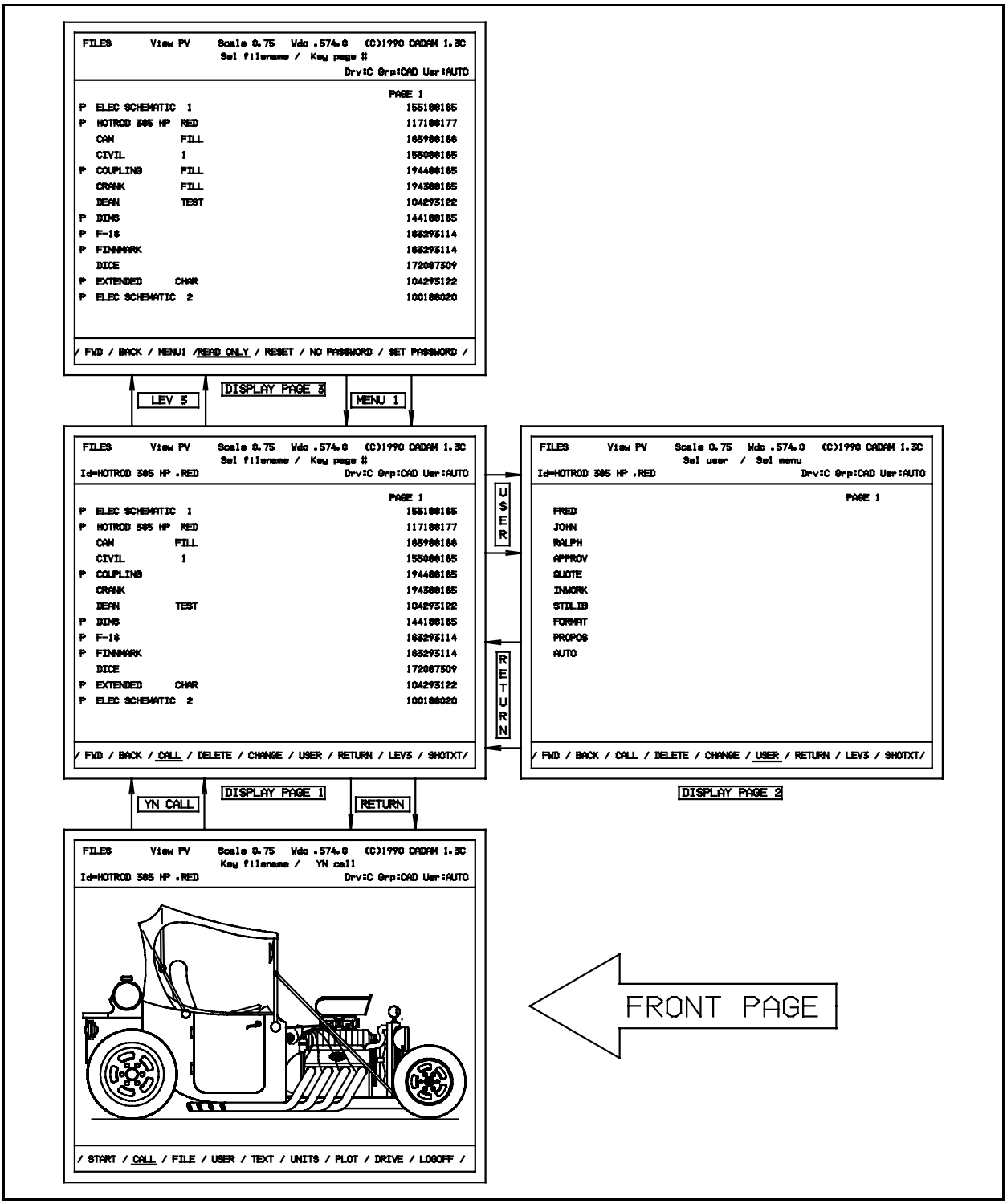

Figure 9 An illustration of the relationship between the four menus accessible from FKey FILE

Submenu / DELETE / (Display Page 1)

To delete a drawing from the hard or floppy disk, make sure that submenu / DELETE / is underlined and then select the model on the screen (i.e. align the cursor to the model you want deleted, and press the select button on the mouse). You are now prompted to press the Y/N button on the mouse to confirm that the model is to be deleted. Once you press the Y/N button the model is deleted. There is no way to recover a deleted model. Models can be protected against accidental deletion by attaching a Read Only (i.e. RO) tag to them. See the third display page to see how to do this.

Submenu / CHANGE / (Display Page 1)

Submenu / CHANGE / can do two different things. It can change the name of a model (i.e. rename it) and it can change a model from one user to another (i.e. move a model from one user to another). See Figure 10 on page 8-23 to see a roadmap showing submenu / CHANGE /.

CHANGING THE MODEL NAME

To change the name of a model, select submenu / CHANGE /. The message ***Key new user / YN same user*** is displayed near the top of the screen. Press the Y/N button on your mouse to confirm that you are going to remain in the same user and change a model name. Now select the model whose name you want to change. The model name will appear in the bottom left hand corner of the display page. Type over the existing name and press the enter key. The name is changed.

CHANGING THE MODEL FROM ONE USER TO ANOTHER

To change a model from one user to another (i.e. to move the model from one user to another), select submenu / CHANGE / at the bottom of the screen. The message ***Key new user / YN same user*** is displayed near the top of the screen. Key in a new user, for example ***INWORK*** (i.e. type the word INWORK and press the ENTER key on your keyboard). You will see a confirmation message at the top left of the display page saying ***New user:INWORK***.

The message ***Sel filename / Key page #*** is displayed near the top of the screen. Now select the model that you want to change from your present user to the new user INWORK. The model name will appear in the bottom left hand corner of the display page.

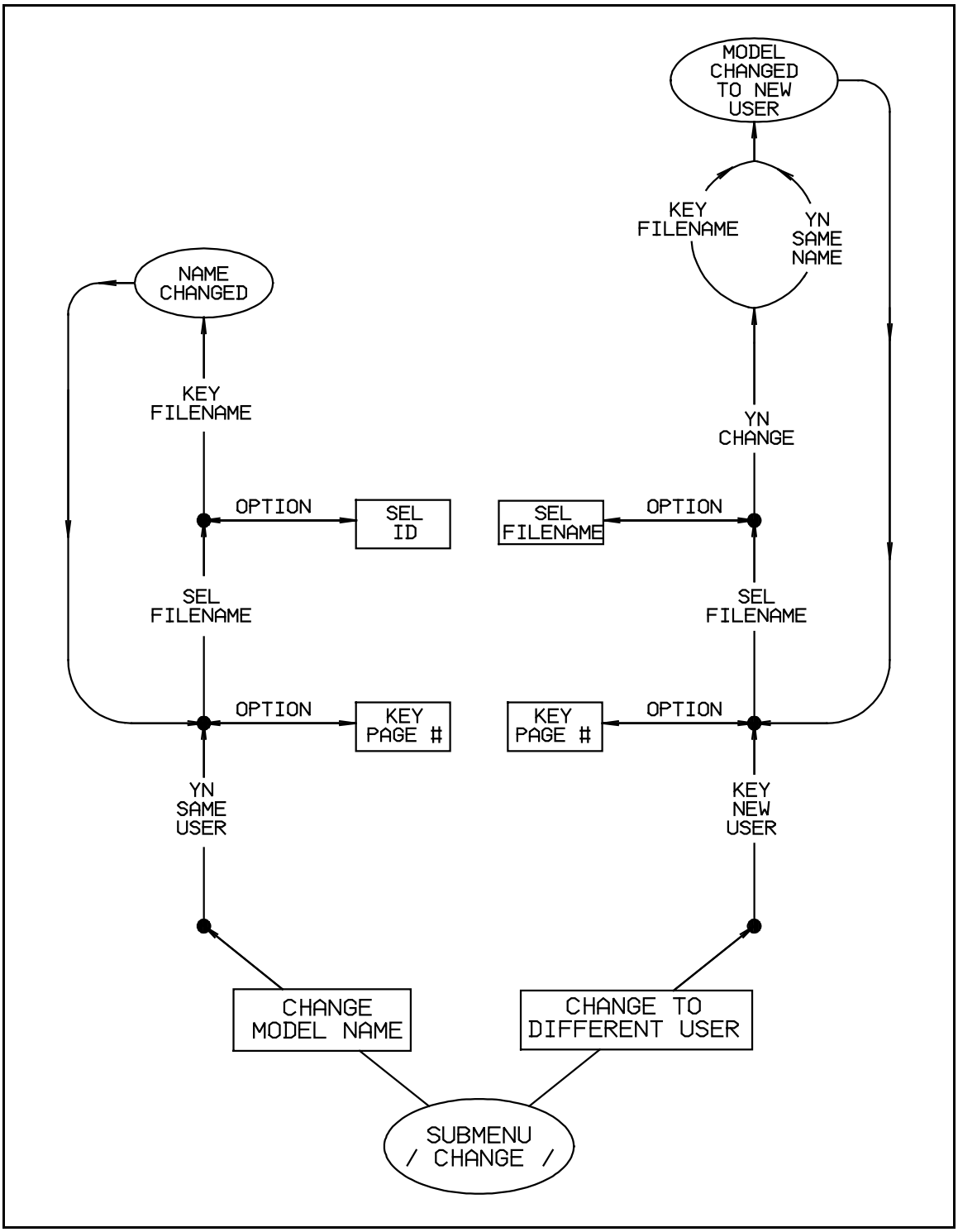

Figure 10 A roadmap showing the SubMenu / CHANGE / options

The message ***YN change / Sel filename*** is displayed near the top of the screen. Press the Y/N button on your mouse to confirm that you want to go ahead and change this model to a different user.

The message ***Key filename / YN same name*** is displayed near the top of the screen. This provides you with the option of renaming the model as it is moved to the different user. Press the Y/N button on your mouse to confirm that the name will remain the same.

The model name will now disappear from the display page in your present user. It will appear in the display page for the new user when you change to that user.

The ability to move a model from user to another can be quite useful. For example lets assume that several designers are working on different parts of the same project. Each designer works in his own user. When a designer is finished with a model he can then move it to a user call CHECK for the checker to check the drawing. After the checker approves the drawing, it can then be moved into another user called RELDWG which is the user in which all the released drawings are kept. All drawings in the RELDWG user can have read only (i.e. RO) tags placed on them so they cannot be inadvertently erased.

Submenu / USER / (Display Page 1)

Submenu / USER / allows you to display a list of all users in your present group (just like looking at all the drawers in a filing cabinet) and to change your active user by selecting a new user from the display page. This is a really fast way of quickly looking at drawing lists of many users in a group.

To display a list of all users in your present group, select submenu / USER /. Display page 2 will now be presented (see Figure 9 on page 8-21). Select a new active user from the screen and you will be returned to display page 1. The list of drawings (or models) displayed there will belong to the new active user that you just selected.

Should you access this page, then decide you do not want to change your active user, either select your present user from the list, or select submenu / RETURN / and you will be returned to display page 1.

Submenu / RETURN / (Display Page 1)

Submenu /RETURN/ allows you to cancel display page 1 and return to your front page. This can be very useful as you acquire Micro CADAM skills since you will sometimes press the Y/N button on the mouse by accident and be brought into the model listing; just select submenu /RETURN/ and you will be returned to the front page of your drawing.

Submenu / LEV3 / (Display Page 1)

Submenu / LEV3 / provides access to display page 3. Display page 3 allows you to add and remove protection from your drawings as shown below:

Submenu / READ ONLY / (Display Page 3)

To add a read only tag to a model, first select submenu / READ ONLY / on display page 3. The message ***Sel filename / Key page #*** will appear near the top of the display page.

Select a filename (i.e. a model) from the display page. The message ***YN read only / Sel filename*** will appear near the top of the display page. Press the Y/N button on the mouse to confirm that you want a read only tag attached to this model. A ***RO*** will now appear to the right of the filename.

Submenu / RESET / (Display Page 3)

To remove a read only tag on a model, first select submenu / RESET / on display page 3. The message ***Sel filename / Key page #*** will appear near the top of the display page.

Select a filename (i.e. a model) from the display page that has an ***RO*** beside it. The message ***YN reset / Sel filename*** will appear near the top of the display page. Press the Y/N button on the mouse to confirm that you want a read only tag removed (i.e. the model reset). The ***RO*** to the right of the filename will now disappear.

Models that have read only tags attached to them cannot be deleted. This provides protection against inadvertently erasing a model.

Submenu / SET PASSWORD / (Display Page 3)

To apply a password to a model, first call the model into memory. You are only allowed to set or remove passwords for those models that are in memory (i.e. the present active model).

Now, climb to display page 3 (i.e. 1st YN CALL, then / LEV3 /) and select submenu / SET PASSWORD /. The message ***Sel filename / Key page #*** will appear near the top of the display page.

Select a filename (i.e. a model) from the display page. The message ***YN set password*** will appear near the top of the display page.

Press the Y/N button on the mouse to confirm that you want to set a password for the model. The message ***Key password*** will appear near the top of the display page. Key the password (i.e. type the password and press the ENTER key on the keyboard). A ***PW*** will now appear to the right of the filename.

NOTE 1: If you try to add a password to a model different than the one which is active in memory, you will receive the error message ***Illegal - not current model*** near the top left of the display page.

NOTE 2: When you call a model that has a password attached to it, select the model name on the display screen. You will not see the message ***Key password*** near the top of the screen. Key the password and the model will be called into memory.

NOTE 3: If you key the wrong password, you will see the error message ***invalid password***. Key the correct password and the model will be called into active memory.

NOTE 4: Recovering a lost password is very difficult, but not impossible. Please take care to remember or record all of your passwords.

Submenu / NO PASSWORD / (Display Page 3)

To remove a password from a model, first call the model into memory. You are only allowed to set or remove passwords for those models that are in memory (i.e. the present active model).

Now, climb to display page 3 (i.e. 1st YN CALL, then / LEV3 /) and select submenu / NO PASSWORD /. The message ***Sel filename / Key page #*** will appear near the top of the display page.

Select the filename of your present active model from the display page. The message ***Key password*** will appear near the top of the display page.

Key the password and the ***PW*** will be removed from the right side of the model name as the password is removed.

Submenu / SHOTXT / (Display Page 1)

Submenu / SHOTXT / allows you to display descriptive text attached to a model. The text for

a single model can be displayed by selecting the model, or the text for all models can be displayed by pressing the Y/N button on the mouse.

Select submenu / SHOTXT / and the message ***Sel filename / YN all*** will appear near the top of the display page. Select a filename (i.e. model) and the descriptive text for that model will be displayed. Press the Y/N button on the mouse and the descriptive text for all models will be displayed. A sample display screen showing the descriptive text displayed is shown in Figure 11 on page 8-27.

```
FILES            View  PV  Scale  1.000 Wdo  1.0000,  0.0  (C)1993 ALTIUM  1.3C
                           Sel filename / Key page #
Id=SAMPLE DRAWING  TEST                                Drv:C Grp:CAD  Usr:DEMO

                                                          PAGE 1
 P  4 WW2 PLANES          P-40 WARHAWK, P-51C MUSTANG, J   ZE   182493269
 P  4WD                   SKELETON OF A V-8 POWERED JEEP        132393269
    ANIMATION             PAGE FWD THRU DETAILS                 182593269
 P  BENCH GRINDER         EXPLODED VIEW OF A GRINDER            182593269
 P  BICYCLE         A1    THE ORIGINAL MICRO CADAM BICYC        183493297
 P  BIKE            2     BICYCLE: ISOMETRIC/SHIFT,BEARI  S,W   183193269
 P  ELECTRICAL SCHEMATIC  ELECTRICAL SCHEMATIC  A CHNG 1  07/   183193269
 P  F-16                  SIDE & FRONT VIEW OF AN F-16          182693269
 P  FLOOR PLAN            D - SIZE ERIC'S HOUSE PLAN            183593297
 P  FRONT ELEV            LARGE COLONIAL HOUSE                  182393269
 P  GARAGE ADDITION       PROPOSED GARAGE ADDITION              111093269
 P  HOLLYHILL             ARTIST CONCEPTION OF OLD HOUSE        132893269
 P  HOTROD                1929 PICKUP W/V-8 FORD ENGINE         182793269
 P  LOCOMOTIVE            CIRCA 1929 STEAMENGINE LOCO           183693297
/ FWD / BACK / CALL / DELETE / CHANGE / USER / RETURN / LEV 3 / SHOTXT /
```

Figure 11 An example showing descriptive text displayed.

FKey FILE

SUBMENU / FILE /

Fkey FILE and submenu / FILE / allows you to file onto disk, a copy of your drawing file presently in active memory. If a model with the same name is already filed on disk, a menu prompts you before overfiling.

To file a copy of the drawing in active memory select submenu / FILE /. The message ***Key filename / YN same name*** will appear near the top of the display page. The name of the model in active memory is copied to the bottom left corner of the front page.

To file the model press the ENTER key on the keyboard. The model is filed and the message ***drawing filed*** appears near the top of the front page.

If the model has been previously filed (i.e. a model with the same name is already on the disk) the message ***Key filename / YN same name*** will appear near the top of the front page. Press the Y/N button on the mouse to overfile the model in active memory onto the model on the disk. The model is filed and the message ***drawing filed*** appears near the top of the front page.

NOTE: DRAWINGS (I.E MODELS) IN MICRO CADAM ARE <u>NOT</u> AUTOMATICALLY FILED. YOU MUST FILE THE MODEL IN ACTIVE MEMORY YOURSELF OR IT WILL BE LOST WHEN YOU EXIT THE PROGRAM OR START A NEW DRAWING!

FKey FILE

SUBMENU / USER /

FKey FILE and submenu / USER / allows you to change your active group and user.

To change your group,user select submenu / USER /. The message ***Key group, user / Sel menu*** will appear near the top of the screen. Type your group,user and press the ENTER key.

For example, lets say you are in CAD,TRAIN and want to change to DRF,FORMAT. Select submenu / USER /, type DRF,FORMAT and press the ENTER KEY. Your active group,user will change from CAD,TRAIN to DRF,FORMAT. Check near the top right of the display screen and you will see your current active group,user.

If you want to change only your active group you can take a short cut. Lets say that you are in CAD,TRAIN and you want to change to DRF,TRAIN. Select submenu / USER /, type **DRF** and press the ENTER key. The group,user will now be DRF,TRAIN. In other words, if you type only one word and press the enter key it will change the active group.

If you want to change only your active user you can also take a short cut. Lets say that you are in CAD,TRAIN and you want to change to CAD,STDLIB. Select submenu / USER /, type **,STDLIB** and press the ENTER key. The group,user will now be CAD,STDLIB. In other words, if you type a comma plus a word (i.e. ,STDLIB) and press the enter key it will change the active user.

FKey FILE

SUBMENU / TEXT /

FKey FILE and submenu / TEXT / allows you to attach descriptive text to your model.

To attach descriptive text to your current model select FKey FILE and submenu / TEXT /. The display page shown in Figure 12 below will appear. The message ***Key text / YN out*** will appear

```
FILES            View  PV  Scale   0.02 Wdo  1.0000,  0.0  (C)1993 ALTIUM  1.3C
                                Key text / YN out
Id=GARAGE ADDITION                                  Drv:C Grp:CAD  Usr:DEMO

  PROPOSED GARAGE ADDITION

/ START / CALL / FILE / USER / TEXT / UNITS / PLOT / DRIVE / LOGOFF /

PROPOSED GARAGE ADDITION
```

Figure 12 An example showing descriptive text being added to a model.

near the top of the display page. Key the text (i.e. type the text and press the ENTER key on the keyboard) and it will be displayed near the top of the page. Remember that you must press the ENTER key after typing the text to attach it to the drawing.

Press the Y/N button on the mouse to exit this display page. The descriptive text is now attached to your drawing in memory. You must file the model onto the disk (overfile it if there is already a copy there) for the descriptive text to be permanently attached.

Refer to submenu /SHOTEXT/ and Figure 11 (page 8-27) to see how to view the attached text.

FKey FILE

SUBMENU / UNITS /

FKey FILE and submenu / UNITS / allows you to view and change various drawing options.

To view and change these options for your current model select FKey FILE and submenu / UNITS /. The display page shown in Figure 12 below will appear. The message

```
FILES            View  PV  Scale   0.02 Wdo   0.775,  0.0  (C)1993 ALTIUM  1.3C
                            Sel option / YN return
                             Dimension = ISO          Drv:C Grp:CAD  Usr:DEMO
        UNITS                VIEW CONV             MAINFRAME COMPATIBILITY
        *    INCH                 1ST ANGLE           DIT/SYM TXT NO SCL
             FEET            *    3RD ANGLE        *  DIT/SYM TXT NORMAL
             MM
             CM
             METER
             OTHERS

        DIMENSION            HATCH/FILL
             STANDARD             OFF
        *    ISO             *    ON

                                                                      /RTN/
```

Figure 13 An example showing various options under FKey FILE SubMenu / UNITS /.

Sel option / YN return will appear near the top of the display page.

Each of the active options will have an asterisk (i.e. *) beside it. Think of this as a little indicator light showing you which one is active. To change to any option select it and the asterisk will appear beside it.

The following options are available for selection:

UNITS:

INCH	The drawing units will be in inches.
FEET	The drawing units will be in feet.
MM	The drawing units will be in millimetres.
CM	The drawing units will be in centimetres.
METER	The drawing units will be in meters.
OTHERS	You can define your own upi (i.e. units per inch)

Option UNITS defines the units in which geometry will be created. Note that if the drawing units are in inches your available drawing area is 20,000 inches x 20,000 inches; if it is in feet it is 20,000 feet x 20,000 feet; and if it is kilometres (i.e. you made up your own units) the drawing area is 20,000 kilometres x 20,000 kilometres. Since you can window 1,000 times larger and 1,000 times smaller you could place yourself in the space shuttle and look out a porthole. You could see the planet earth and could window down to see a 30" x 60" office desk.

DIMENSION:

STANDARD	CADAM dimensions standard system
ISO	International Organization for Standardization

Option DIM defines the dimension standard. Dimensioning standards ensure that all dimensions added to your model will adhere to the relevant standard.

VIEW CONV:

1ST ANGLE	Auxiliary view convention used in Europe
3RD ANGLE	Auxiliary view convention used in North America

Option VIEW CONV determines how related views are projected from parent views.

HATCH/FILL:

OFF	The hatch and fill display is turned off.
ON	The hatch and fill display is turned on.

Option HATCH/FILL can be useful if you want to turn the hatch/fill display off to speed up response time on large drawings.

MAINFRAME COMPATIBILITY:

DIT/SYM TXT NO SCL	Dittos and symbols will not scale as you window larger and smaller. This allows you to maintain compatibility with some mainframe CADAM drawings.
DIT/SYM TXT NORMAL	Dittos and symbols will scale as you windows larger and smaller. This is the MICRO CADAM default option.

When you are finished setting the options, press the Y/N button on the mouse to return to your drawing.

FKey FILE

SUBMENU / PLOT /

FKey FILE and submenu / PLOT / allows you to add plot data to your drawing, or to edit existing plot data. Plot data is the information attached to the drawing that lets the system know which part of the 20,000 x 20,000 unit drawing area you want to plot, and allows you to adjust some of the plot parameters. A drawing must have plot data attached to it before it can be plotted. When plot data is attached to a drawing a ***P*** is placed to the left of the model name on display page 1 (i.e. the page displayed after submenu / CALL / has been activated by the Y/N button on the mouse).

Adding plot data to a drawing, starter formats, plotting to a printer and plotting to a plotter are covered in the chapter on plotting.

The following chart summarizes the steps necessary to add plot data to a drawing, and then file the drawing with the plot data attached.

A SUMMARY OF ACTIONS (WITH RESULTS) REQUIRED TO ADD PLOT DATA TO A DRAWING		
STEP NO.	**ACTION / RESULT**	**MENU PROMPT (BEFORE THE ACTION) (2nd line from top of screen)**
1	**SELECT Fkey FILE**	
2	**SELECT submenu /PLOT/**	
3	**SELECT submenu /PLOT DATA/**	**Sel menu**
4	**INDICATE/SELECT load point**	**Sel load pt / Ind load pt**
5	**INDICATE/SELECT opposite corner point**	**Def opposite corner / Sel menu**
6	**YN end**	**Redefine corner / YN end**
7	**YN (to accept displayed scale)**	**Key scale = 1.000**
8	**YN (to accept displayed plot area**	**YN accept / Sel menu**
9	**SELECT submenu /FILE/**	**drawing must be filed before plot data can be used**
10	**YN (to accept same name)**	**Key filename / YN same name**
11	**YN (to accept overfile/replace)**	**Key filename / YN replace**
12	**Drawing filed with plot data**	**Drawing filed**

If plot data already exists when you select submenu /PLOT DATA/ you will be presented with a display page similar to that shown in Figure 14 below.

```
FILES            View  PV  Scale   0.02 Wdo   0.775,  0.0  (C)1993 ALTIUM  1.3C
                                   Sel menu
                                                     Drv:C Grp:CAD  Usr:DEMO

         ANGLE = 0    0   0            NOTE SCALE = 1.00000

         LOAD POINT                    HEIGHT = 23.50000
         X = -0.07888                  WIDTH = 33.81006
         Y = -0.06870
                                       SCALED HEIGHT = 23.50000
         SCALE = 1.00000               SCALED WIDTH = 33.81006

/ANGLE/LOAD PT/SCL/NOTE SCL/HEIGHT/WIDTH//ERASE/FILE/RTN/
```

Figure 14 An example showing plot information.

The message ***Sel menu*** will appear near the top of the display page. The following submenu options are available on the submenu near the bottom of the page:

ANGLE: Allows you to adjust the angle of the plot.

LOAD PT: Allows you to adjust the position of the load point.

SCL: Allows you to adjust the scale the drawing is plotted at. This scale is usually 1.000 since the starter format is always full size. This scale may be adjusted in order to 'shrink' an E size drawing to C size, etc. See the chapter on plotting for more details.

NOTE SCL: Allows you to adjust the scale that notes are plotted at. In Micro CADAM notes are an absolute size, regardless of auxiliary view scale. This means that a ¼" note on an auxiliary view with a scale of 1.000 and a ¼" note on an auxiliary view with a scale of .125 will both be ¼" high. This is the same way you work on the drafting board...your notes are always the same size.

Occasionally it is necessary to make all notes larger (or smaller) on the plot, without having to return to the drawing to change note sizes. This is done by changing the NOTE SCL. The following chart shows how NOTE SCL affects the size of the note when plotted:

EXAMPLES OF HOW NOTE SCL AFFECTS THE PLOTTED NOTE SIZE			
NOTE SIZE ON DRAWING	**AUX VIEW SCALE**	**NOTE SCALE (NOTE SCL) FOR PLOTTING**	**SIZE OF NOTE WHEN PLOTTED**
¼"	**1.000**	**1.000**	**¼"**
¼"	**.125**	**1.000**	**¼"**
¼"	**2.000**	**1.000**	**¼"**
¼"	**1.000**	**2.000**	**½**
¼"	**.125**	**2.000**	**½**
¼"	**2.000**	**2.000**	**½"**

HEIGHT: Allows you to key in the plot height required.

WIDTH: Allows you to key in the plot width required.

ERASE: Allows you to erase all plot data. The drawing must be filed again, with the plot data erased, to remove the ***P*** (for plot data) from the model listing.

FILE: Allows you to file a drawing from this submenu instead of returning to the first submenu. This duplicates FKey FILE, submenu /FILE/

RTN: Climbs back one submenu level.

NOTE: SCALED HEIGHT and SCALED WIDTH show the actual plot height and width. The SCALE is multiplied by the HEIGHT and WIDTH to provide these numbers.

FKey FILE

SUBMENU / DRIVE /

FKey FILE and submenu / DRIVE / allows you to change your active drive in order to change the drive from which data is read or filed, and to transfer models to another disk. On a computer the drives are normally setup as follows:

DRIVE A: Your computer boots from this floppy disk drive if there is a disk in it when the computer is turned on. The drive can be any of the following:

- 5¼" 1.2 MB capacity
- 5¼" 360 K capacity
- 3½" 720 K capacity
- 3½" 1.4 MB capacity

DRIVE B: Many computers have a second floppy disk drive. This drive is called B: and can be any of the same drive types as drive A:.

DRIVE C:, D:, E:, etc.:

The remaining drive letters are reserved for the hard disk inside your computer.

To change your active drive select submenu / DRIVE / and the message ***Key drive*** will appear in the message line near the top of the display page. Key the drive letter you wish to change to (e.g. type **D** and press the enter key) and your active drive will be changed to that drive.

For example, lets say you want to call (i.e. read) a model from a group,user ***CAD,TRAIN*** on floppy disk drive A (which happens to be a 3½" 1.44 MB floppy) and copy it to drive C (i.e. the hard disk) into the group,user ***DRF,RALPH***. Follow these steps:

1) SELECT FKey FILE and submenu / DRIVE / and key ***A*** to change to drive A.

2) SELECT submenu / USER / and change the group,user to ***CAD,TRAIN***.

3) SELECT submenu / CALL / and call up (i.e. read from the floppy) the model from the floppy disk into active memory.

4) SELECT submenu / DRIVE / and key ***C*** to change the active drive to C.

5) SELECT submenu / USER / and change the group,user to ***DRF,RALPH***.

6) SELECT submenu / FILE / and file the drawing onto the hard disk.

FKey FILE

SUBMENU / LOGOFF /

FKey FILE and submenu / LOGOFF / allows you to end your Micro CADAM work session and return to DOS.

To logoff select submenu / LOGOFF / and the message ***YN logoff*** will appear near the top of the display page. Press the Y/N button on your mouse; the Micro CADAM session is terminated and you are returned to your DOS session.

CHAPTER 9

FKey WINDOW

/ MOVE / SIZE / BOX / TURN / OVRLY / SET // 1 / 2 / 3 / 4 / 5 / 6 / 7 / PLOT /

Figure 1 Menu Item Tree for FKey WINDOW

Function Key WINDOW allows you to adjust the ***'viewport'*** onto the 20,000 unit x 20,000 unit electronic drawing area. This ***'viewport'*** acts just like a porthole on a ship. As the ship moves left, right or up and down, the view through the porthole changes (this is equivalent to Fkey WINDOW submenu /MOVE/). As you get closer or farther away from the porthole you will see more or less of the view (this is equivalent to FKey WINDOW submenu /SIZE/).

ACCESSING FKEY WINDOW:

Function Key WINDOW can be accessed two different ways:

- SELECT FKey WINDOW from the sidebar menu or the popup menu. This method of accessing FKey WINDOW aborts your present activity and your place in the menu structure, and places you in FKey WINDOW.

- Press the SELECT and INDICATE buttons on the mouse simultaneously. This is known as a window "toggle" and is the preferred method of accessing FKey WINDOW. To "toggle" back to where you were, press the SELECT and INDICATED buttons again simultaneously. The window toggle suspends the activity in the present active FKey; changes to FKey WINDOW; allows you to use all of the window submenus; and then returns you to your previous FKey exactly where you left your menu structure. This way you could be in the middle of /GROUP/ /TRAP/ /TRANSLATE/; then toggle to WINDOW to move to another location; toggle back to window; and then continue with /GROUP/ /TRAP/ /TRANSLATE/.

  Another advantage of this method is that it is quicker. Your fingers are already on the mouse buttons, and you do not have to track the cursor across the screen to line it up with FKey WINDOW on the sidebar or popup menu.

ELEMENTS and WORDS:

Each time FKey WINDOW is accessed, a message like ***Number=1186, 6693*** appears near the top of the screen on the right hand side. The first number, 1186 is the number of ***elements*** remaining in the drawing; the second number, 6693 is the number of ***words*** remaining in the drawing. If either one of these numbers reaches 0, you will receive the message ***Model full*** and you will be unable to place any more information in the model (until you erase unneeded elements and pack the drawing). Think of it as a two battery flashlight. Both batteries must have energy left to keep the bulb glowing.

An example of a window display page is shown in Figure 2 below:

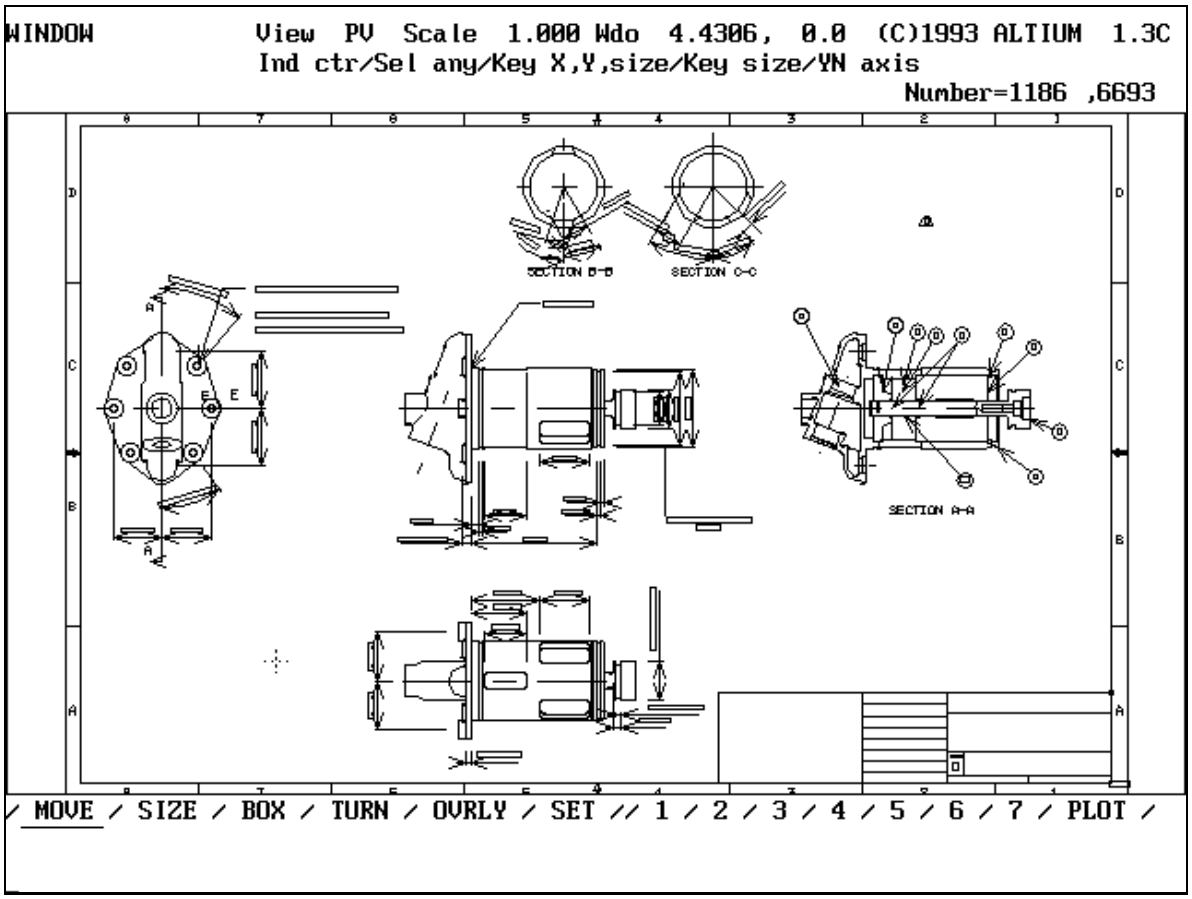

Figure 2 An example showing FKey WINDOW with the number of elements and words remaining.

A word is a group of bytes stored in computer memory. Computers use a binary code to store information. The smallest unit of information is called the ***bit*** (which is short for **binary digit**).

8 bits are called 1 byte and provide enough information to define the letters of the alphabet (A,B,C,D,E...etc.) and numbers (1,2,3,4...etc.). This is shown as follows:

The letter A	01000001
The letter B	01000010
The letter C	01000011
The letter D	01000100
The number 1	00110000
The number 2	00110010

Think of each of these bits as a little light bulb. If the bulb is lit, it is a 1; if it is not lit then it is a 0. By turning these little light bulbs on and off in a specific sequence we can develop a code for letters and numbers. Combinations of these bits are defined as follows (we will refer to letter A which is 01000001)

Bit	a 0 or 1
Nybble	a set of 4 bits (0100)
Byte	a set of 8 bits or two nybbles (01000001)
Word	a set of 32 bits (or 4 bytes)

The memory term ***word*** has been carried over from the time when CADAM software ran exclusively on mainframe computers. Many mainframe operations occur a word at a time rather than one byte at a time as happens in many microcomputer operations.

Each point or line or circle (or other elements) in the drawing counts as one element. Each of these elements may use different numbers of words. The number of elements and words for some elements are shown as follows:

- A point is 1 element and is made up of 3 words
- A line is 1 element and is made up of 6 words
- A circle is 1 element and is made up of 6 words

A new, blank Micro CADAM model has room for **2381 elements** and **16286 words**. This means you could reach a model full condition by placing 2,381 points on the drawing, or by using fewer elements with more words. Be sure to clean up (i.e. erase unused or unneeded elements) periodically and pack (see FKey SHOW for information on pack) the drawing. Remember that elements in detail pages and on no show pages count as well. Use dittos wherever possible (see FKey DETAIL in Chapter 26 for more information on dittos).

THE WINDOW DISPLAY SCREEN:

When a model is first called (i.e. a drawing retrieved) from the hard/floppy disk, it is loaded into active memory and is displayed on your computer screen as follows:

- Paper center is loaded onto the middle of the screen.
- Auxiliary view PV is the active view.
- The scale of auxiliary view PV is displayed as it was when last filed.
- The window size is set at 1.0.
- The window angle is set at 0 degrees.

This is shown in Figure 3 on page 9 - 5. The electronic drawing area is like a drafting table with dimensions 20,000 units x 20,000 units. The center of this drafting table (and the center of the electronic drawing area) is called paper center (i.e. PC). Paper center never moves (just like the center of your drafting board never moves. The sheet of drawing paper (which is like view PV) is placed on top of your drafting table and aligned such that the middle of the drawing paper is lined up with the middle of the drafting board. Thus when you first start a new blank drawing, the origin of view PV aligns with paper center.

Just as you can reposition your drawing paper anywhere on your drafting table, you can also reposition your auxiliary view anywhere on your electronic drawing area. The center of the drafting board remains the same and the center of the electronic drawing area (paper center) remains the same also. When you first call up your Micro CADAM model (with the repositioned view PV) the model loads onto the screen at paper center and the geometry in view PV is located somewhere else on the screen.

SETTING THE SUBMENU UNDERLINE DEFAULT:

When you first start Micro CADAM and access FKey WINDOW, submenu /MOVE/ is underlined by default. This means that every time you toggle into WINDOW, you will be ready to ***move*** the window around.

There are times when you may want to size, or box, or turn every time you toggle into WINDOW. Here is how to change the submenu default to something else: whatever submenu option is underlined when you set any window becomes the default submenu option until you

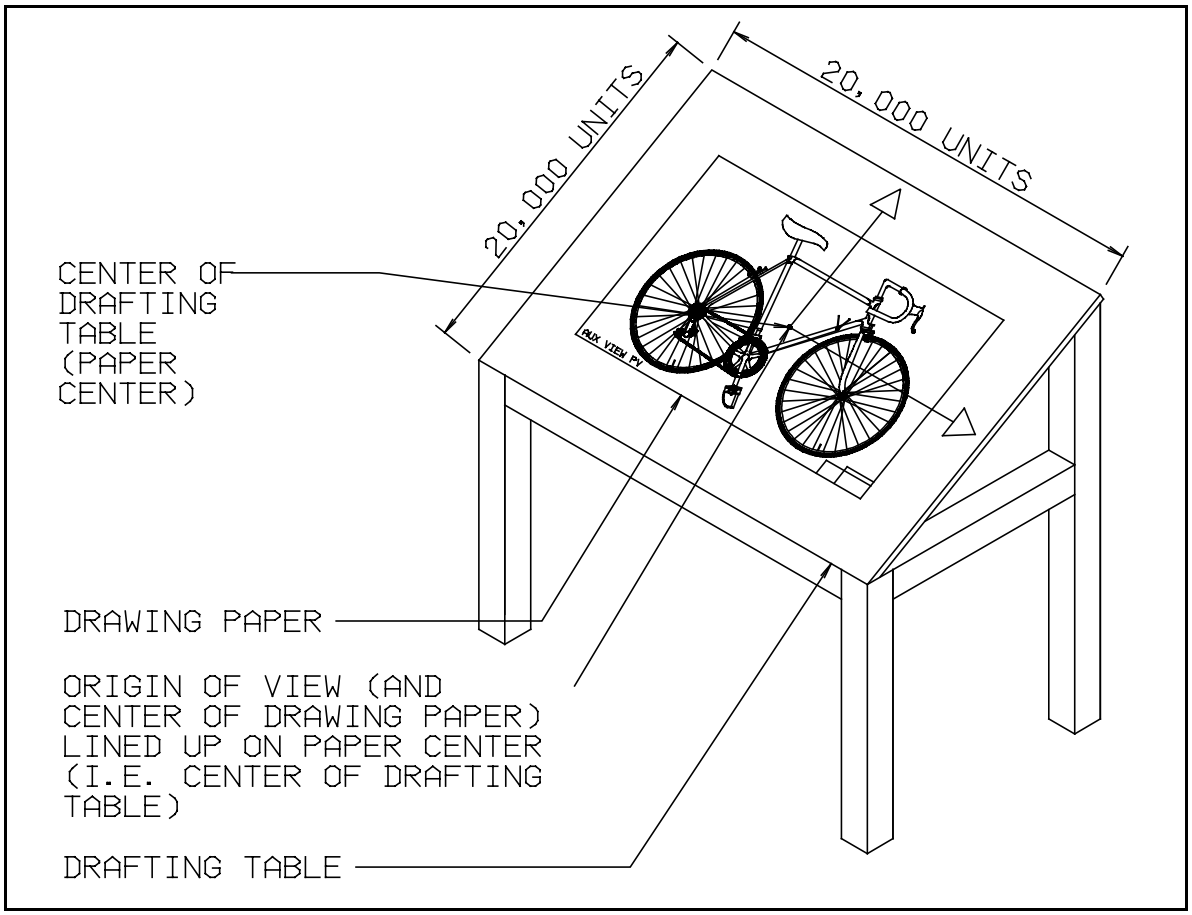

Figure 3 An example showing how a drawing is displayed when first called up.

change it to something else or logoff. In other words to make submenu /BOX/ you submenu default do the following:

- Select submenu /BOX/ so that it is underlined.
- Set the submenu position into memory (i.e. either just select submenu /SET/, or select submenu /SET/ and then select one of the set numbers ... /1/, /2/, etc.)

That's it! Now submenu /BOX/ will be underlined whenever you toggle into FKey Window.

FUNCTION KEY WINDOW SUBMENU OPTIONS:

FKey WINDOW has the following submenu options:

- /MOVE/ Allows you to move the window to display another part of your drawing.
- /SIZE/ Allows you to adjust the size of your window. You can zoom in for a closeup view or zoom out for a panoramic view.
- /BOX/ Allows you to change the window size and location by specifying a boxed area.
- /TURN/ Allows you to rotate the window to any desired angle.
- /OVRLY/ Allows you to overlay one model with another. (In MICRO CADAM CORNERSTONE, OVRLY operates in a view only mode.)
- /SET/ Allows you to set (i.e. store) the default submenu option and/or to set the window location and size into memory for future recall.
- /PLOT/ Allows you to adjust the window size and position to match the plot area.

Fkey WINDOW allows you to reposition and resize your display window. Specific information on the submenu options are listed with page numbers as follows:

FUNCTION KEY WINDOW		
WINDOW ITEM	DESCRIPTION	PAGE NO.
submenu /MOVE/	Information of FKey / WINDOW / submenu / MOVE /	9-10
submenu /SIZE/	Information of FKey / WINDOW / submenu / SIZE /	9-13
submenu /BOX/	Information of FKey / WINDOW / submenu / BOX /	9-17
submenu /TURN/	Information of FKey / WINDOW / submenu / TURN /	9-21
submenu /OVRLY/	Information of FKey / WINDOW / submenu / OVRLY /	9-23
submenu /SET/	Information of FKey / WINDOW / submenu / SET /	9-27
submenu /PLOT/	Information of FKey / WINDOW / submenu / PLOT /	9-29

FKey WINDOW

SUBMENU / MOVE /

Submenu / MOVE / allows you to move your window display to a new location. (This can also be called panning.) When you SELECT submenu /MOVE/ you will notice a message near the top of the screen that says ***Ind ctr/Sel any/Key X,Y, size/Key size/YN axis***. There are 5 different ways to move your drawing window.

IND CTR: (i.e. indicate center)

Indicate a location on the screen and that location will move to the middle of the screen. Thus

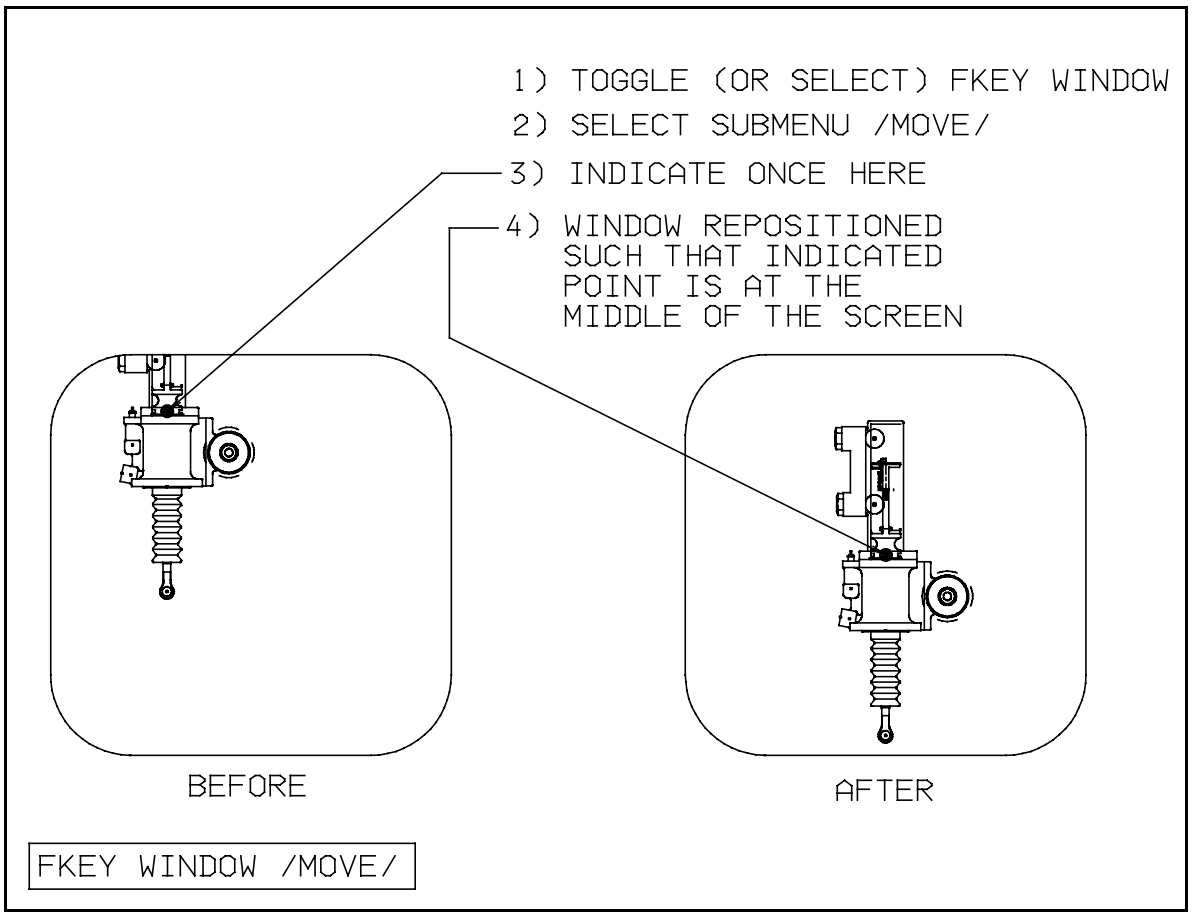

Figure 4 An example of moving a window by indicating location.

you are able to reposition the screen with one indicate. An example of this is shown in Figure 4.

You can also use this option to 'pan' across your drawing. Indicate repeatedly the same location

a short distance from the center of the screen and the drawing will 'pan' slowly in the indicated direction. If you indicate repeatedly the same location a long distance from the center of the screen and the drawing will 'pan' rapidly in the indicated direction.

SEL ANY: (i.e. select any)

Select an element and the drawing will shift so that the element will move to the middle of the screen. If a circle, ellipse of spline is selected, the window is centered around the selected point on the element.

KEY X,Y,SIZE:

Key X,Y,SIZE and the location X,Y on the drawing will move to the middle of the window and the window will be resized to the keyed size.

KEY SIZE:

Key the window size required. Many menu items are duplicated between the different submenus.

YN AXIS:

Press the Y/N button on the mouse and the window will be positioned with the origin of the view at the middle of the window.

FKey WINDOW

SUBMENU / SIZE /

Submenu /SIZE/ allows you to change the size of your window display.

The size of the window display can be related to back to your drafting board. Window size 1.0 is how the drawing would appear if you at a normal distance from it on the drafting board. Window size 1000 (maximum) is how the drawing would appear (units of inches are assumed here) if you were 1,000 " (or 83’ 4") away from your drawing. Window size .001 (minimum) is how the drawing would appear if you were look at your drawing through a 1000 power microscope. This means that the system can window out to a size of 1000 and window in to a size of .001 for a total resolution of 1,000 x 1,000 or 1,000,000:1.

When you SELECT submenu /SIZE/ you will notice a message near the top of the screen that says ***Ind size/Key size/Key X,Y,size/Sel elem/YN size=1***. There are 5 different ways to resize your drawing window.

IND SIZE: (Indicate size)

The geometry on the window can be made smaller (as if you were getting farther away) or larger (as if you were getting closer) by indicating a vertical location above the center line of the screen. Note that it is only the vertical location that is important...the horizontal position can be anywhere and give the same result.

To make any geometry on the screen get smaller, as if you were getting farther away, just indicate anywhere above the center line of the screen. (Note that in this case the window size number will get larger as the geometry gets smaller).

To make any geometry on the screen get larger, as if you were getting closer, just indicate anywhere below the center line of the screen. (Note that in this case the window size number will get smaller as the geometry gets larger).

As the distance from the centerline of the indicated vertical position increases, the difference in the size of the window will increase. This relationship is shown in the example in Figure 5 on page 9 - 15.

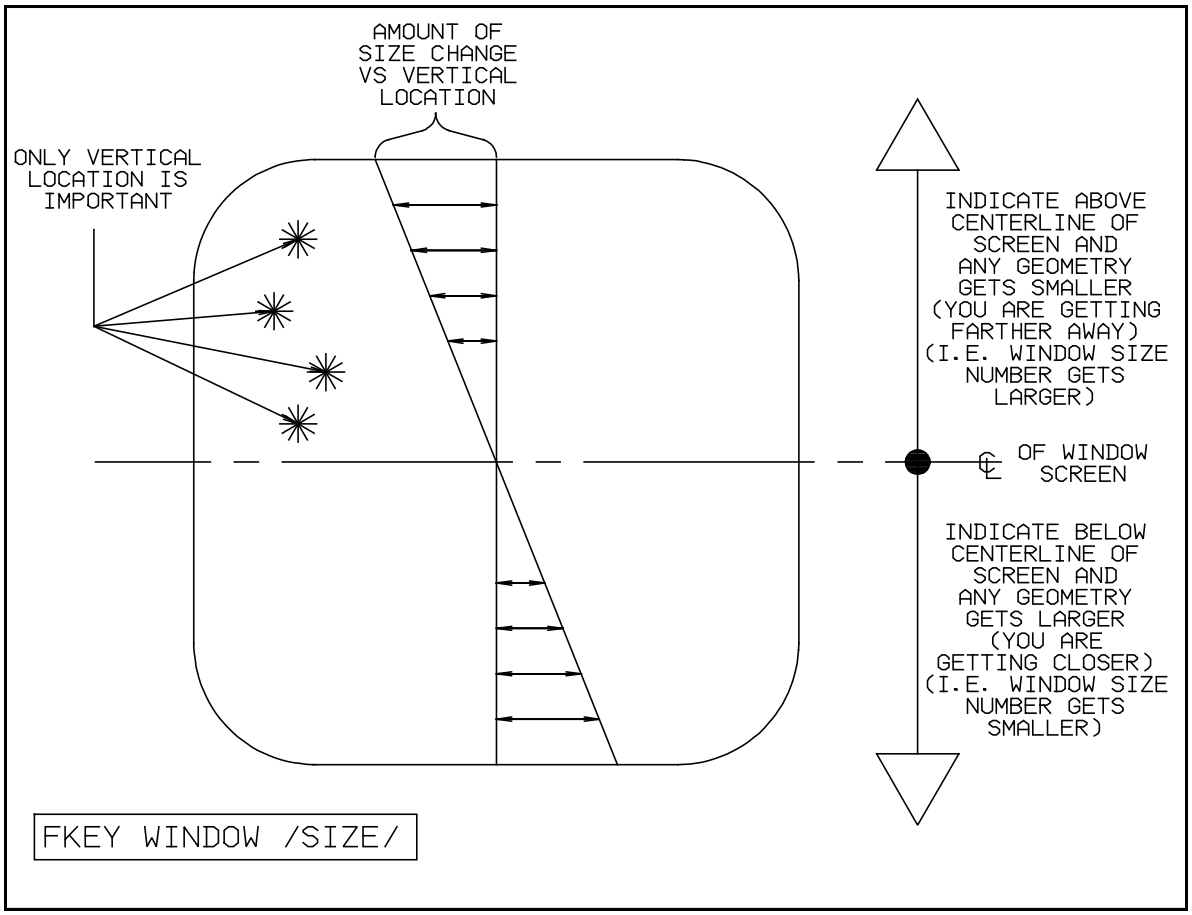

Figure 5 An example showing how FKey WINDOW /SIZE/ works with INDICATE.

The chart below gives an idea of the approximate window size numbers vs distance from the center of the screen:

APPROXIMATE WINDOW SIZE NUMBER GENERATED FOR VERTICAL POSITION ABOVE THE SCREEN CENTERLINE	
VERTICAL DISTANCE FROM CENTER OF SCREEN	**WINDOW SIZE NUMBER SHOWN NEAR TOP OF SCREEN**
.25"	**1.088**
1"	**1.4675**
1.5"	**1.9016**
2"	**2.6474**
2.5"	**4.3559**
3"	**19.308**

KEY SIZE:

Key the window size required.

KEY X,Y,SIZE:

Key the X,Y coordinate that you want to move to the middle of the screen, and the window screen size you want.

SEL ELEM: (Select Element)

Select a line on the screen, and window will move so that the middle of the line selected will be placed at the middle of the screen.

If a circle, ellipse, or spline is selected, the window is centered at the point where the element was selected.

YN SIZE=1:

Press the Y/N button on the mouse and the window size number will be returned to 1.0 (i.e. normal viewing distance). This is handy when you are zoomed too far out or too far in and seem to be 'lost' somewhere in the drawing.

FKey WINDOW

SUBMENU / BOX /

Submenu /BOX/ allows you to change the size and location of your window display by specifying a boxed area.

When you SELECT submenu /BOX/ you will notice a message near the top of the screen that says ***Ind corner/Key size/Key X,Y,size/Sel elem/YN size=1***. There is only 1 way to box your drawing window...by indicating diagonally opposite corners. The other 4 options are duplicates of those for submenu /MOVE/ and /SIZE/.

IND CORNER: (Indicate corner)

Submenu /BOX/ is very useful because it allows you to position and zoom in to a particular area on your drawing with two indicates.

To box an area on your drawing follow these instructions:

1) SELECT/TOGGLE to FKey WINDOW

2) SELECT submenu /BOX/.

3) INDICATE the first corner of the box

4) INDICATE the second corner of the box

5) The boxed area fills the display screen.

6) OPTIONAL: Press the Y/N button on your mouse to cancel the window box and return to the previous screen. This option can be very handy for zooming in close to a particular area on a drawing, taking a look, press Y/N to return to the previous screen, and then repeat the process.

These actions are illustrated in Figure 5 on page 9-17.

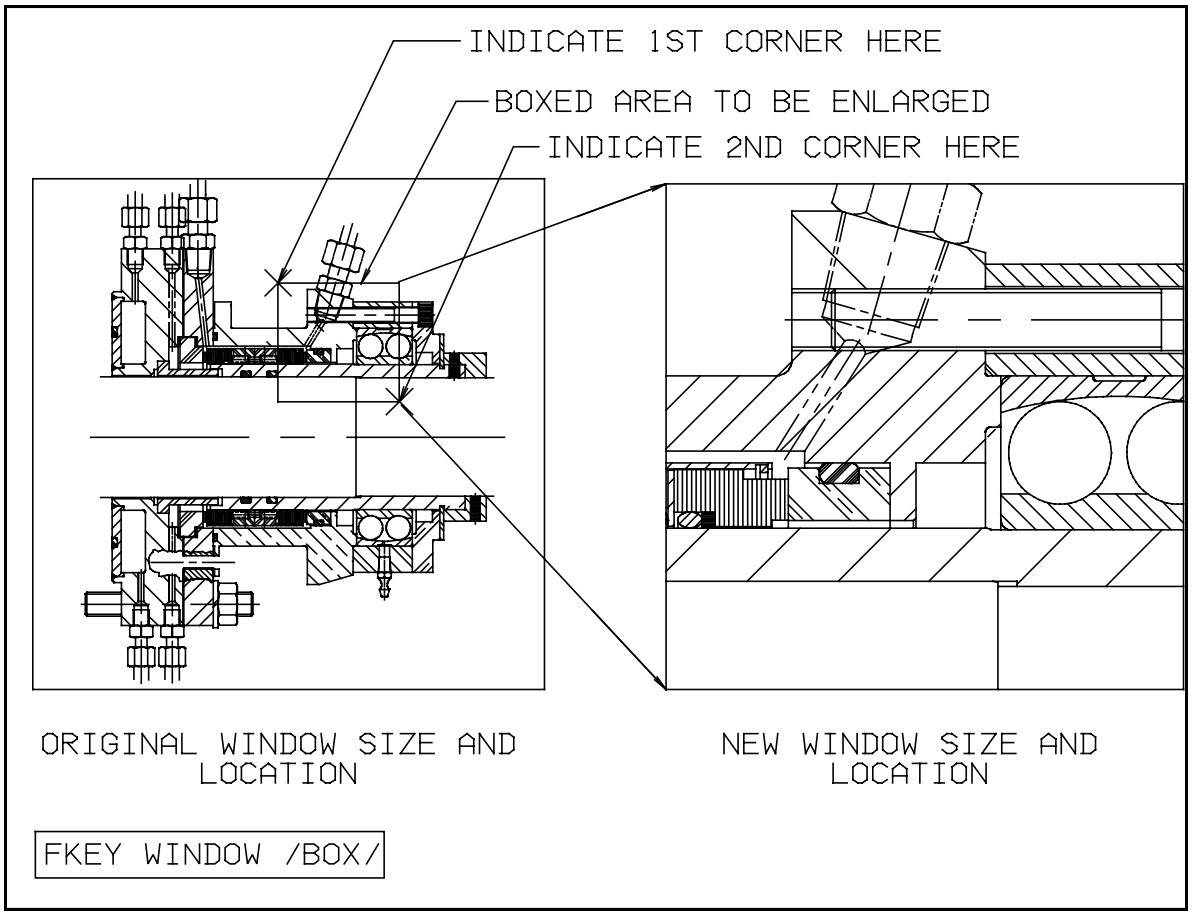

Figure 6 An example using FKey WINDOW and SubMenu /BOX/.

FKey WINDOW

SUBMENU / TURN /

Submenu /TURN/ allows you to turn your window display screen to different angles.

When you SELECT submenu /TURN/ you will notice a message near the top of the screen that says ***Sel element / Ind angle / Key angle / YN curnt axis***.

SEL ELEMENT: (Select element)

Select a line on the screen and the window will turn such that the line will appear horizontal. The window will move the middle of the line to the middle of the window. Select the line again and the window will 'flip' 180 degrees. It will continue 'flipping' each time it is selected.

IND ANGLE: (Indicate angle)

Indicate a position on the screen. The window rotates to the indicated angle in reference to the original axis.

KEY ANGLE:

Key the desired window angle in degrees, minutes and seconds (e.g. 25,15,9). The window will rotate to the desired angle.

YN CURRENT AXIS:

Press the Y/N button on the mouse and the window will rotate to align with the current axis. This can be very useful for two reasons:

1) You can quickly realign your window to the 'normal' orientation (i.e. aligned with the origin axis should the window become misaligned.

2) You can turn your window angle to align with a newly created alternate coordinate system (i.e. alternate origin). If you then save this position with a window /SET/ command, you will be able to return to both the new alternate coordinate system and the window setting very quickly.

FKey WINDOW

SUBMENU / OVRLY /

Submenu /OVRLY/ allows you to overlay your model in active memory with another model that you call from disk. The models align on top of paper center. This alignment capability has several uses:

1) Check the alignment of two models that you are going to overplot (i.e. plot on top of each other). During overplot the two models are stacked on top of paper center. During the FKey WINDOW submenu /OVRLY/ process the models are also stacked on top of paper center. Thus you can confirm how the two models are going to plot out together before actually plotting them.

2) If you are running out of model space (i.e. getting a ***model full*** message appearing near the top of the screen) you may elect to finish the drawing by splitting the original model into two models, and then plotting the two models together. You can use the overlay capability to align the two models (i.e. for the relative positions of geometry) as you construct them.

3) If you have several revisions of the same drawing you can overlay two revisions together and see the differences. In order to more easily see the difference between the revisions it is a good idea to change the color of the active drawing (to change it to red, SELECT FKey GROUP, submenu TRAP, submenu TRAPOUT, submenu RETURN, FKey TYPE, submenu COLOR, submenu /SIDE ON/, SELECT Color RED, and press the YN button on the mouse to change the entire group to red). Then when the overlay drawing (which will appear in its' own colors) is stacked on top of your red active drawing, the differences will be immediately obvious.

When you SELECT submenu /OVRLY/ you will notice a message near the top of the screen that says ***Key filename***.

KEY FILENAME:

Key in the filename and that model will be visually overlayed on top of the active model.

Note that the overlay process is visual only. You cannot modify the overlayed model. Any action that causes the window to be re-drawn (such as FKey WINDOW /MOVE/ or /SIZE/) will cause the overlay model to be removed from the display. If this happens you must then 'reactivate' the display.

You can 'reactivate' the display as follows (lets assume that a drawing called **GEARBOX,1** is

the drawing in active memory):

1) When you first SELECT submenu /OVRLY/ you will notice a message near the top of the screen that says ***Key filename***.

2) KEY the filename (i.e. type the filename and press the ENTER key). Lets say that we want to overlay the drawing **GEARBOX,2** on top of the active drawing **GEARBOX,1**. KEY **GEARBOX,2** (i.e. type GEARBOX,2 and press the ENTER key). (NOTE: Make sure you are in the correct drive, group and user prior to keying in the overlay name.)

3) The model **GEARBOX,2** is now visually overlayed on top of the active model **GEARBOX,1**.

4) Now use FKey WINDOW submenu /BOX/ to 'zoom' in on a part of the drawing. The overlayed drawing **GEARBOX,2** disappears and you are left with the active drawing **GEARBOX,1** on the display page.

5) SELECT FKey WINDOW submenu /OVRLY/ again. You will notice a message near the top of the screen that says ***Key filename /YN current overlay*** on the upper line and ***Filename = GEARBOX,2*** on the lower line.

6) Press the Y/N button on your mouse and the drawing **GEARBOX,2** will again be overlayed on top of the active model.

An example of FKey WINDOW submenu /OVRLY/ is shown in Figure 7, Figure 8 and Figure 9 on page 9 - 26.

NOTE: The commercial version of Micro CADAM (Called Micro CADAM Plus) has a similar but much more powerful Function Key called FKey OVERLAY. Function key OVERLAY allows you to have up to 20 models in V1R5 (and up to 200 models in R14) overlayed on top of each other. Each of these 20 (or 200 models) is a completely separate cadam model associated into a single drawing by means of a 'parent drawing'. The parent drawing maintains the association of all 20 (or 200) models. Each of the 20/200 models can be edited either separately or in conjunction with all other models; the display of any model can be turned off (so it seems to disappear); the color for each model can be changed; and read only protection can be applied to any overlay drawing.

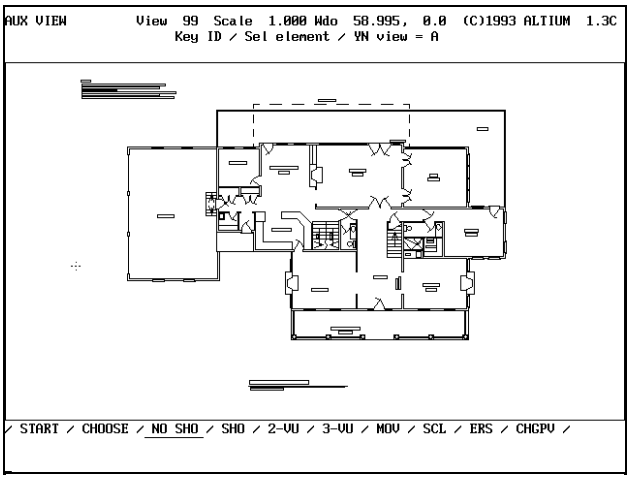

Figure 7 The active drawing in memory.

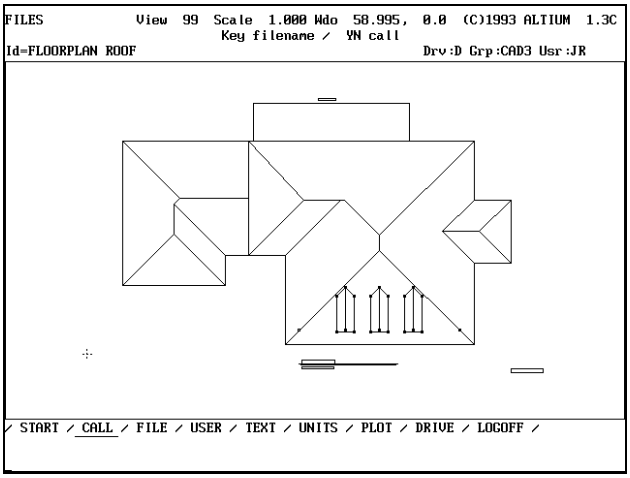

Figure 8 The drawing to be overlayed.

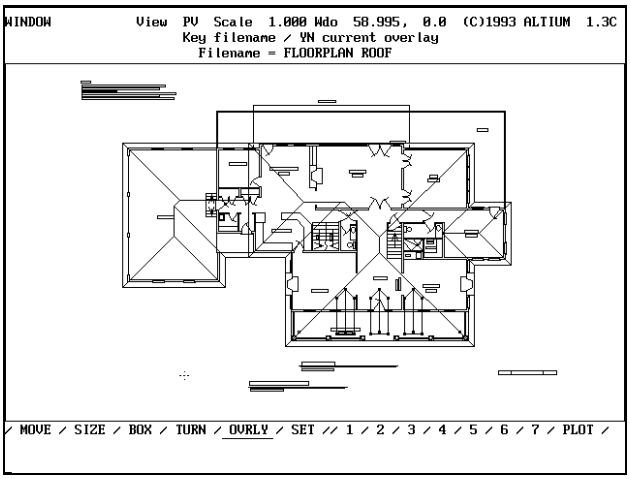

Figure 9 The two drawings overlayed.

FKey WINDOW

SUBMENU / SET /

Submenu /SET/ allows you to memorize your window location and size into set memories (these act just like memories on your calculator). These set memories are stored with your drawing. Set memories from 1 - 7 are available.

TO SET A WINDOW SIZE AND LOCATION INTO A SET NUMBER:

Toggle into FKey Window and SELECT submenu /SET/. You will notice a message near the top of the screen that says ***Sel set number***. SELECT any of the set memories (i.e. /1/, /2/, /3/, /4/, /5/, /6/ or /7/) and the window size and location is stored into the set number. The set numbers are filed with the drawing.

A good practice to get into is to set the window set numbers to the following:

SET /1/	The entire drawing
SET /2/	View PV (Plan View)
SET /3/	View FV (Front View)
SET /4/	View SV (Side View)
SET /5/, /6/ and /7/	Detail and miscellaneous areas

It is very important to use window /SET/ since it is relatively inefficient to move and box and pan all over your drawing.

TO RECALL A WINDOW SIZE AND LOCATION FROM A SET NUMBER:

Toggle into FKey Window and SELECT submenu /1/, /2/, /3/, /4/, /5/, /6/ or /7/. The window is immediately placed at the size and location stored in the set number.

Remember, to store a window set first SELECT submenu /SET/ and then the set number. To recall a set number SELECT submenu /1/, /2/, /3/, /4/, /5/, /6/ or /7/.

FKey WINDOW

SUBMENU / PLOT /

Submenu /PLOT/ allows you to set your window size and location to the area defined by the plot data.

CHAPTER 10

FKey ANALYZE

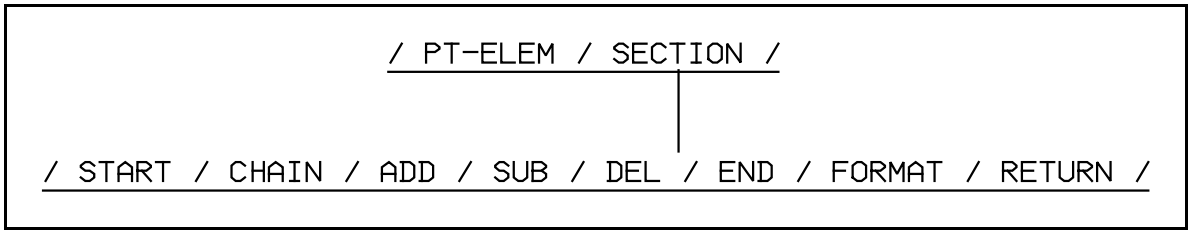

Figure 1 Menu Item Tree for FKey ANALYZE

INTRODUCTION TO ANALYZE:

Function Key ANALYZE allows you to analyze points and elements for their individual properties (SubMenu /PT-ELEM/), and also to calculate section properties (SubMenu /SECTION/) for an element or a set of elements.

Section properties can be calculated by using either the boundary element method or the centerline method.

MENU ITEM TREE DESCRIPTION

- /PT-ELEM/ Analyzes points and elements and provides information about them.
- /SECTION/ Provides section properties
  - /START/ Starts the section property analysis
  - /CHAIN/ Automatically connects the end of one element with the start of another element in a chain. Each time /CHAIN/ is selected, another element is connected to the chain.
  - /ADD/ Adds the present calculation into the memory register. Think of this as the M+ button on your calculator; every time you SELECT it, the present calculations are added into a memory register

- /SUB/ Subtracts the present calculation from the memory register. This is useful for subtracting 'holes' or 'voids' from the cross section you are performing a section analysis on.

- /DEL/ Discards the properties of the last defined subsection.

- /END/ End says that you are finished adding and subtracting subsections into the register and your now want your total.

- /FORMAT/ Displays the computed values in a user-defined format.

- /RETURN/ Select this option when you are finished with the section properties calculation and want to climb back to the previous submenu level.

FKey ANALYZE

SUBMENU / PT-ELEM /

BEGINNER SECTION

Fkey ANALYZE SubMenu /PT-ELEM/ allows you to analyze individual points and elements for their properties. Examples of the different types of pt and element analysis are listed with page numbers as follows:

FKey ANALYZE SubMenu /PT-ELEM/		
ANALYZE NO.	**DESCRIPTION**	**PAGE NO.**
1	Point	10-6
2	Line	10-7
3	Lines at a relative angle to each other	10-8
4	Circle	10-9
5	Arc	10-10
6	Ellipse	10-11
7	Spline	10-12
8	Spline with tangent vector	10-13
9	Linear Spline	10-15
10	Conic	10-16
11	Axis	10-17
12	Symbols, Dittos, Notes and Dimensions	10-21
13	Distance between two elements	10-23

To analyze points and elements, follow these general steps:

1) SELECT FKey ANALYZE.

2) SELECT SubMenu /PT-ELEM/ (if it is not already underlined).

3) SELECT the point or element you want to analyze. The point or element's properties will now be displayed on the third line from the top. The type of element detected will also be displayed (for example 'Det spline' would be displayed when a spline is selected).

4) Toggle through any multiple analyze display lines by pressing the YN button on the mouse.

A sample display screen is shown in Figure 2 on Page 5. In this figure the 'ANALYZE DISPLAY LINE #1' is the first line displaying information about the line. To see the rest of the information lines available, toggle through them by pressing the Y/N button on the mouse. This is explained more on the following pages.

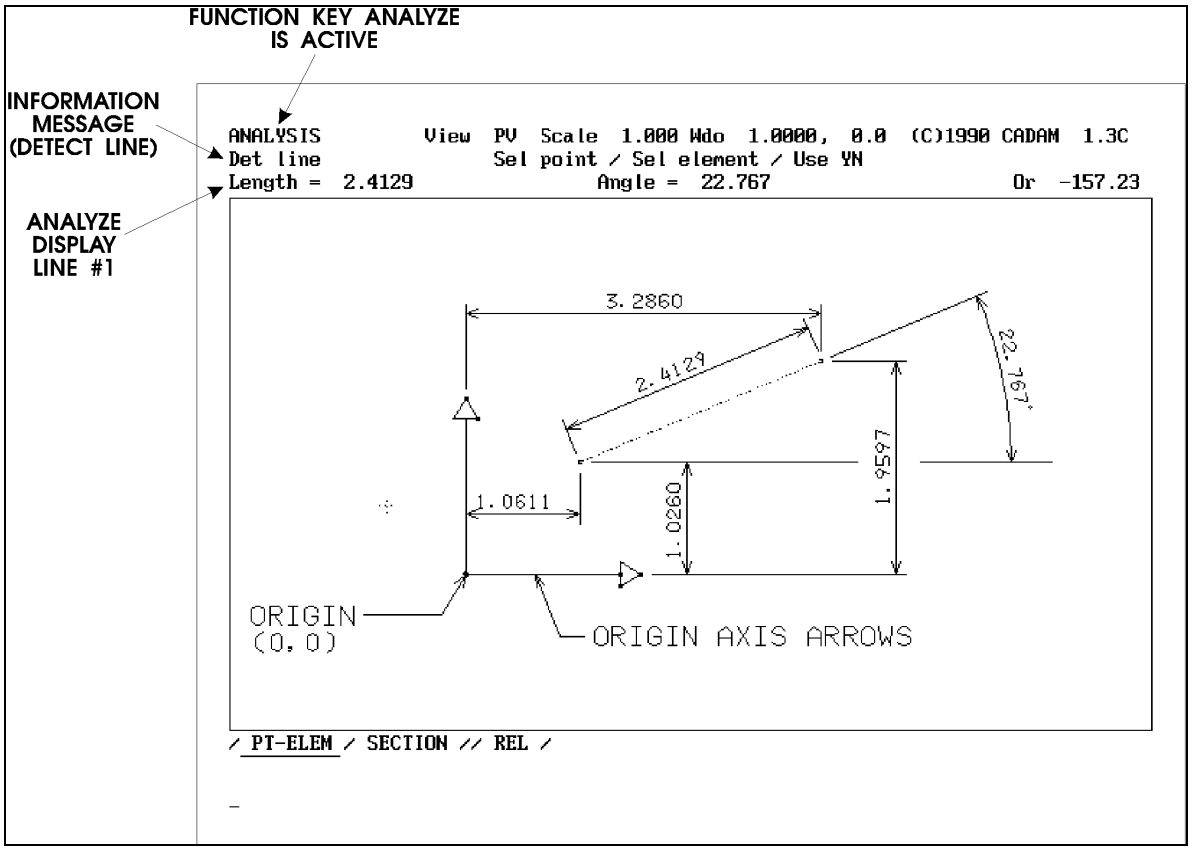

Figure 2 An example of a display screen for analyzing a line.

1) ANALYZING A POINT

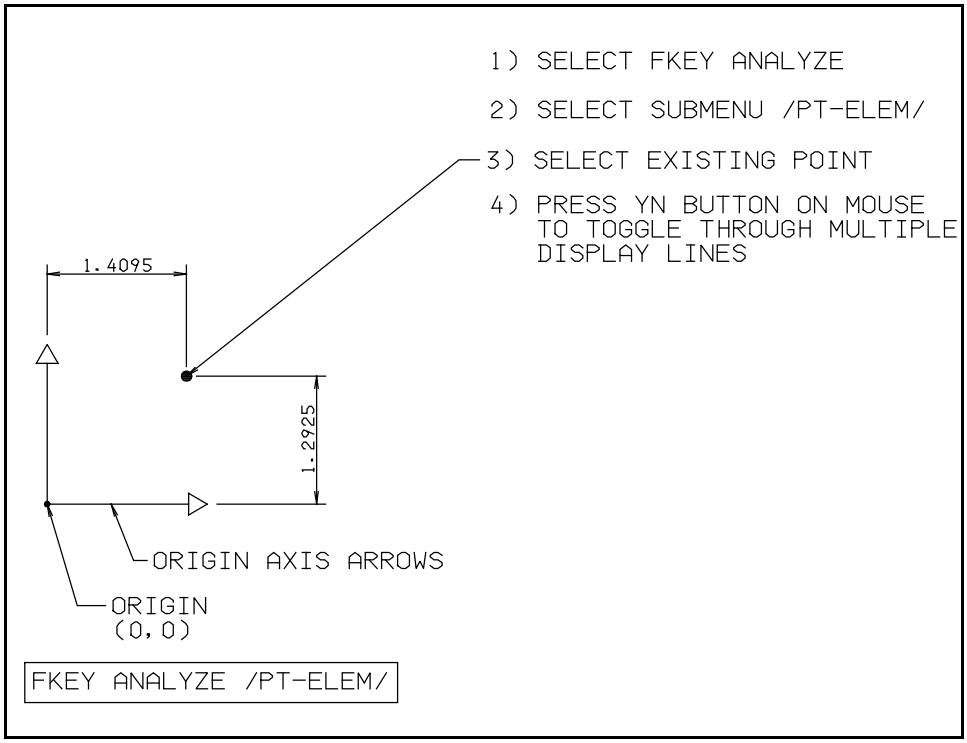

Figure 3 An example for analyzing a point.

INFORMATION MESSAGE: Det point		
ANALYZE DISPLAY LINE NO.	**DISPLAY LINE**	**DESCRIPTION**
1	X=1.4095 Y=1.2925	Displays the X,Y coordinates of the point in 2D space
2	3D:X=1.4095 Y=1.2925 Z=0	Displays the X,Y,Z coordinates of the point in 3D space

2) ANALYZING A LINE

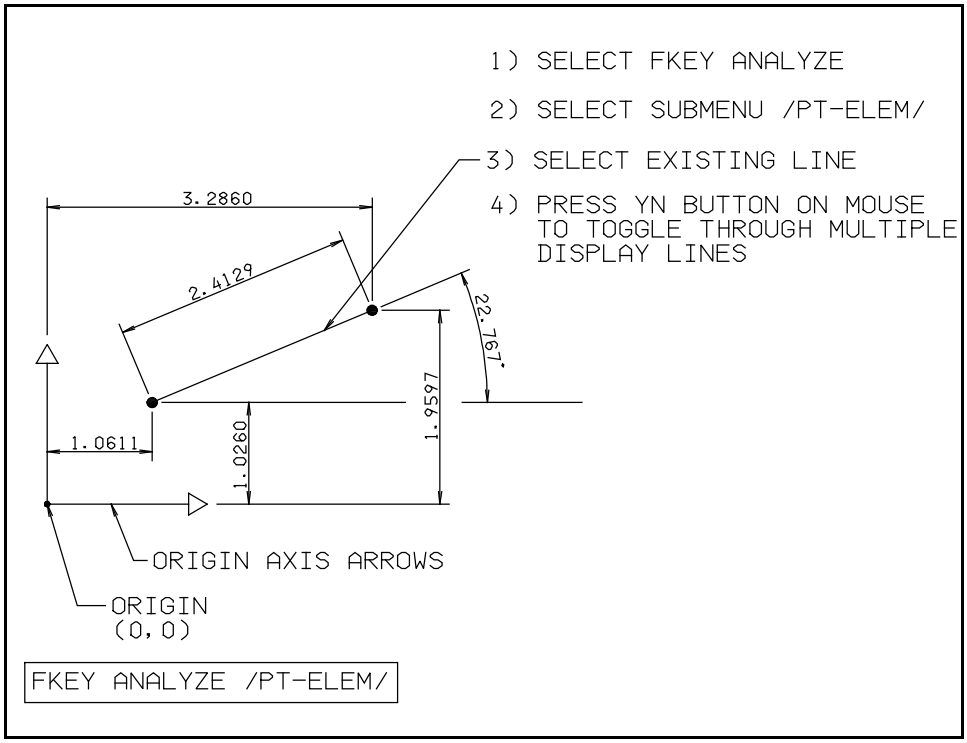

Figure 4 An example for analyzing a line.

INFORMATION MESSAGE: Det line		
ANALYZE DISPLAY LINE NO.	**DISPLAY LINE**	**DESCRIPTION**
1	Length=2.4129 Angle=22.767 Or -157.23	Displays the length of the line and the angle of the line in decimal degrees
2	Length=2.4129 Angle=22,46,2 Or -157,13,58	Displays the length of the line and the angle of the line in degrees, minutes and seconds
3	A=-0.3869 B=0.92209 C=0.53540	Displays the coefficients of the equation of the line in the form: AX + BY = C
4	X1=1.0611 Y1=1.0260	Displays the coordinates of one end of the line
5	X2=3.2860 Y2=1.9597	Displays the coordinates of the other end of the line

3) ANALYZING TWO LINES RELATIVE TO EACH OTHER

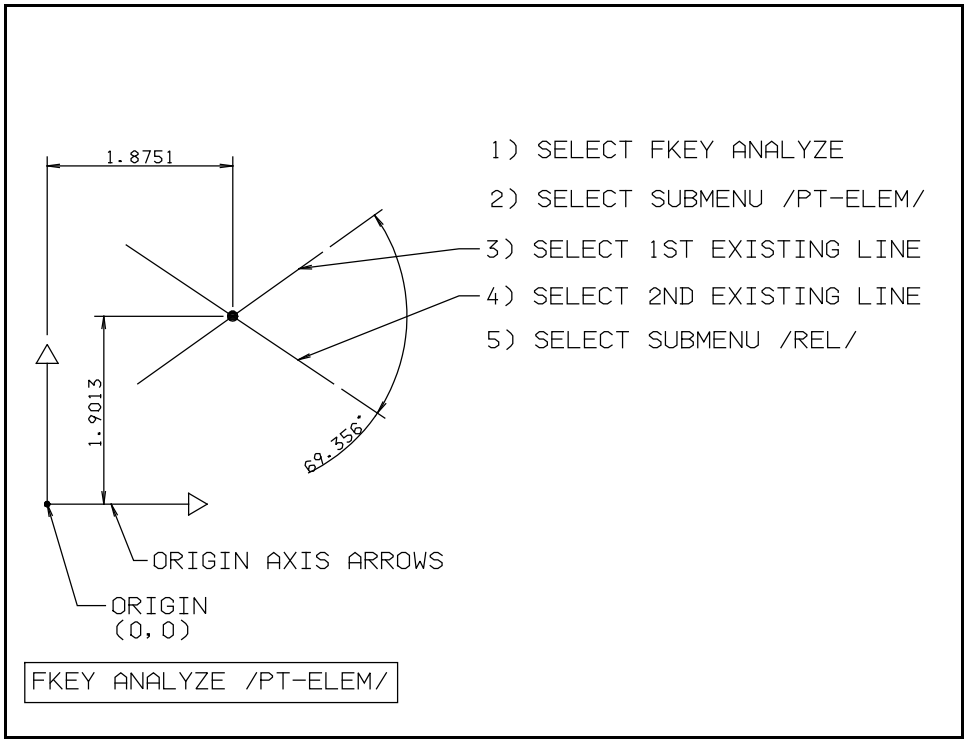

Figure 5 An example for analyzing two lines relative to each other.

INFORMATION MESSAGE: Det line				
ANALYZE DISPLAY LINE NO.	**DISPLAY LINE**			**DESCRIPTION**
1	X=1.8751	Y=1.9013	Rel ang=69.356	Displays the coordinate of the point of intersection of the two lines, and their angle relative to each other

4) ANALYZING A CIRCLE

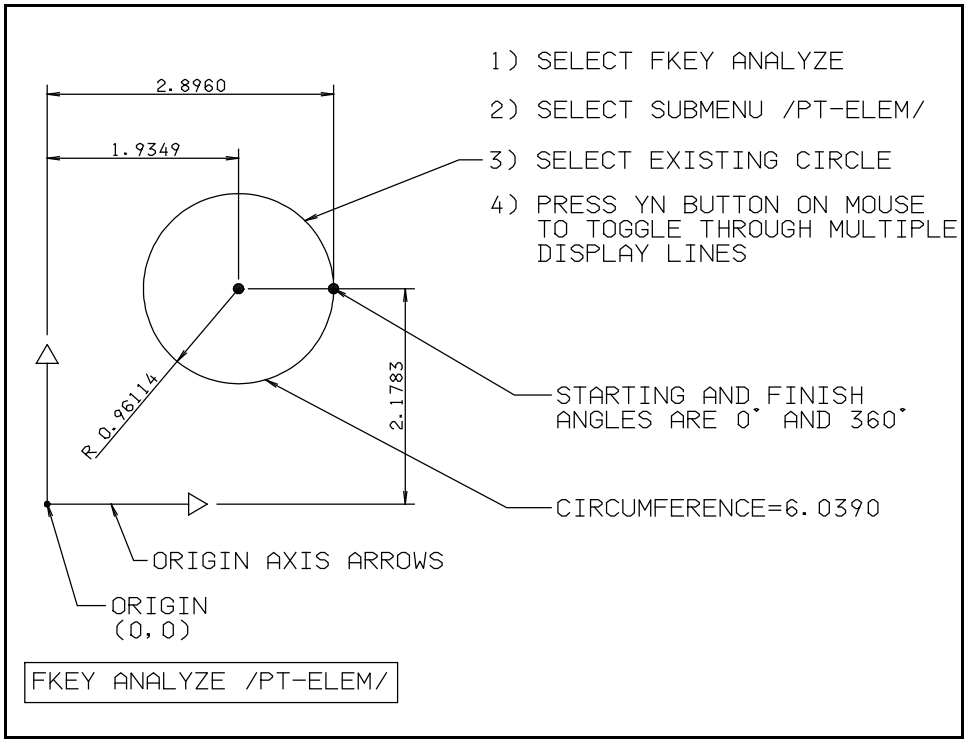

Figure 6 An example for analyzing a circle.

INFORMATION MESSAGE: Det circle				
ANALYZE DISPLAY LINE NO.	**DISPLAY LINE**			**DESCRIPTION**
1	X=1.9349	Y=2.1783	Radius=.96114	Displays the coordinates of the center of the circle, and its radius
2	Ang1=0,0,0	Ang2=360,0,0	Length=6.0390	Displays the starting and finishing angles of the circle in degrees, minutes and seconds, and its circumference
3	X1=2.8960	Y1=2.1783		Displays the coordinates of the starting point of the circle
4	X2=2.8960	Y2=2.1783		Displays the coordinates of the ending point of the circle

5) ANALYZING AN ARC

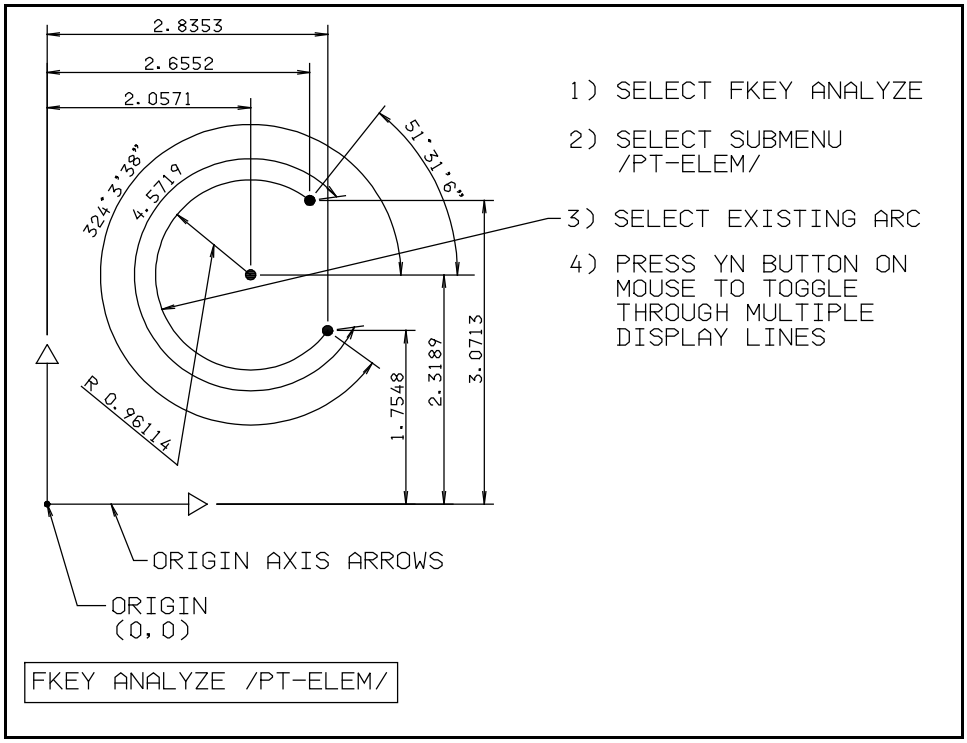

Figure 7 An example for analyzing an arc.

INFORMATION MESSAGE: Det circle		
ANALYZE DISPLAY LINE NO.	**DISPLAY LINE**	**DESCRIPTION**
1	X=2.0571 Y=2.3189 Radius=.96114	Displays the coordinates of the center of the arc, and its radius
2	Ang1=51,31,6 Ang2=324,3,38 Length=4.5719	Displays the starting and finishing angles of the arc in degrees, minutes and seconds, and the arc length
3	X1=2.6552 Y1=3.0713	Displays the coordinates of the starting point of the arc
4	X2=2.8353 Y2=1.7548	Displays the coordinates of the ending point of the arc

6) ANALYZING AN ELLIPSE

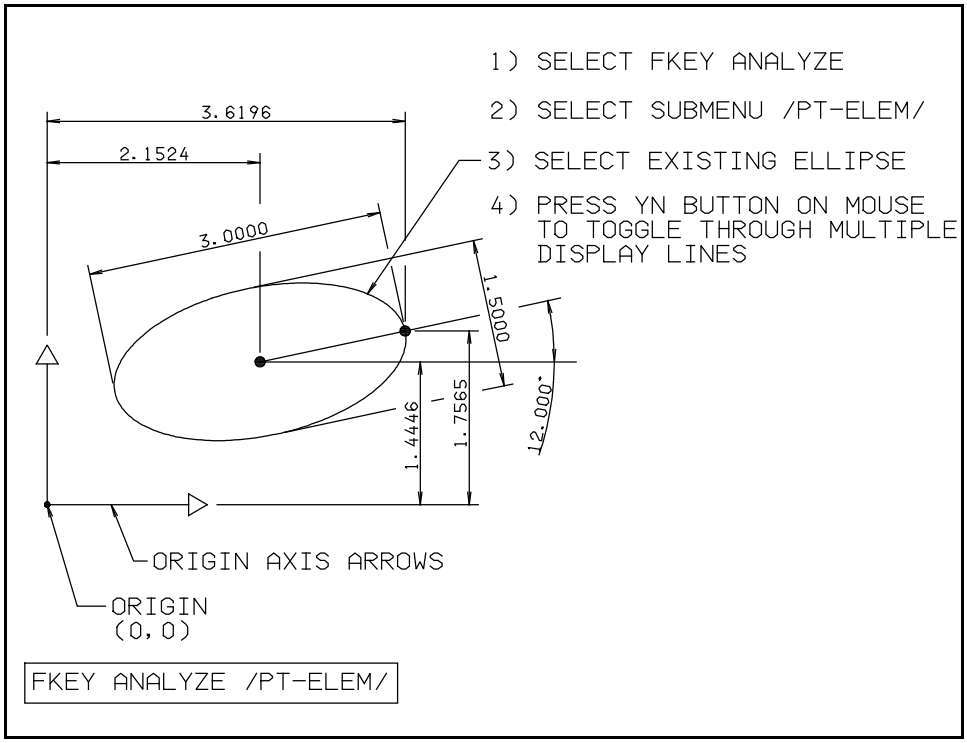

Figure 8 An example for analyzing an ellipse.

INFORMATION MESSAGE: Det ellipse		
ANALYZE DISPLAY LINE NO.	**DISPLAY LINE**	**DESCRIPTION**
1	X=2.1524 Y=1.4446	Displays the coordinates of the center of the ellipse
2	Maj dia = 3.0000 Min dia = 1.5000	Displays the major and minor diameter of the ellipse
3	X1=3.6196 Y1=1.7565	Displays the coordinates of the starting point of the ellipse
4	X2=3.6196 Y2=1.7565	Displays the coordinates of the ending point of the ellipse
5	Ang1=0,0,0 Ang2=0,0,0 Rot ang=12,0,0	Displays the starting and finishing angles of the arc in degrees, minutes and seconds, and the rotational angle

7) ANALYZING A SPLINE

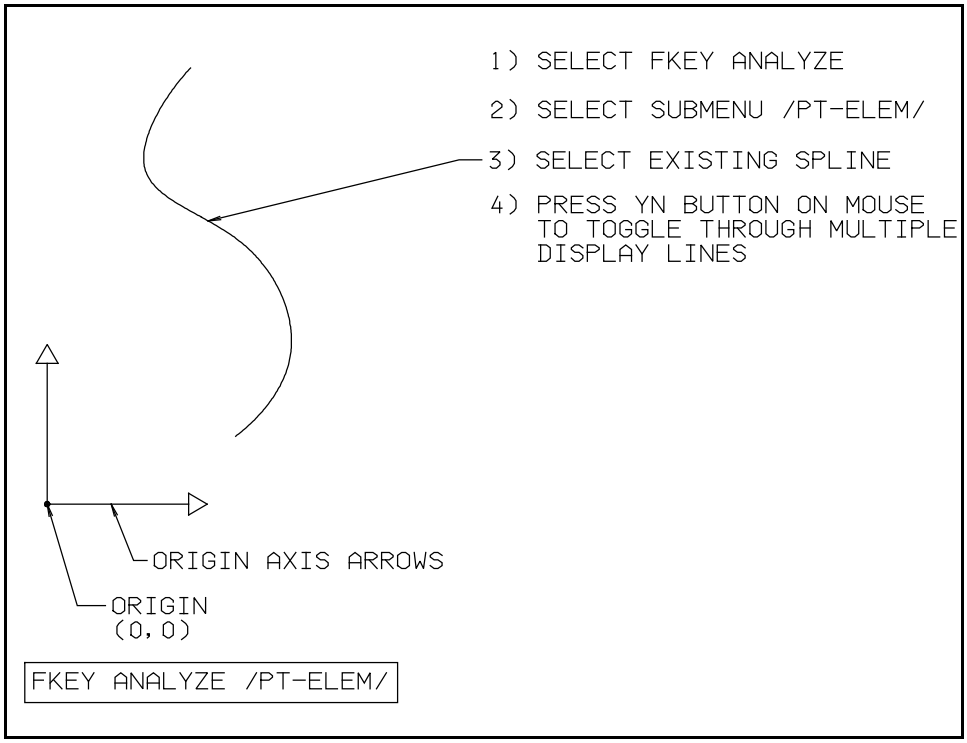

Figure 9 An example for analyzing a spline.

INFORMATION MESSAGE: Det spline		
ANALYZE DISPLAY LINE NO.	**DISPLAY LINE**	**DESCRIPTION**
1	Length=4.7178	Displays the length of the spline

8) ANALYZING A SPLINE WITH A TANGENT VECTOR

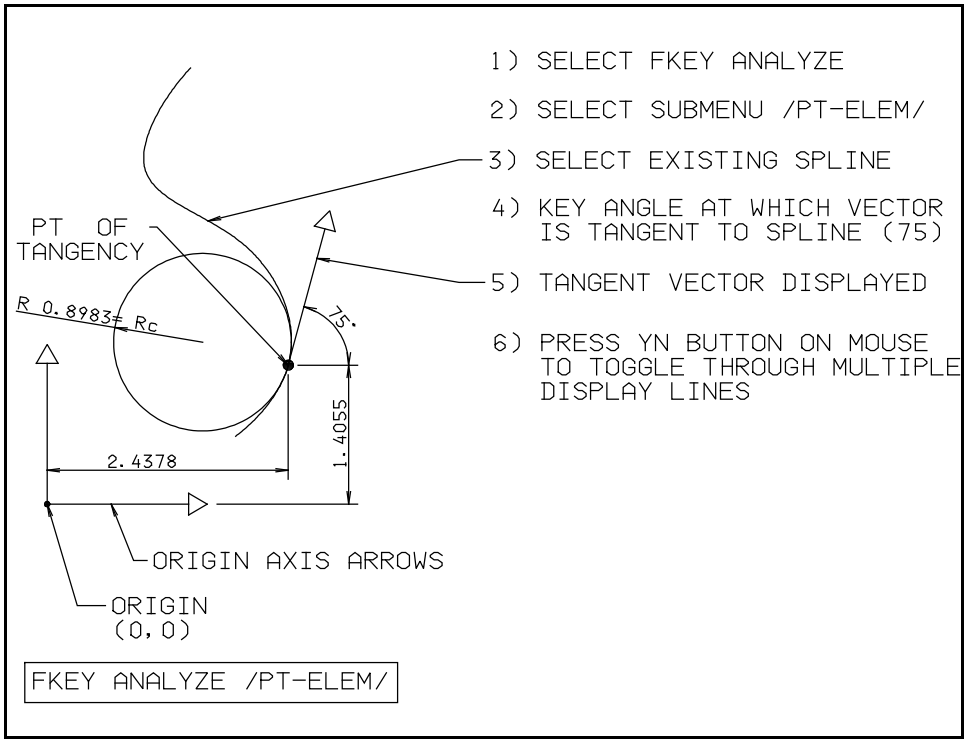

Figure 10 An example for analyzing a spline with a tangent vector.

INFORMATION MESSAGE: Det spline		
ANALYZE DISPLAY LINE NO.	**DISPLAY LINE**	**DESCRIPTION**
1	X=2.4378 Y=1.4055	Displays the coordinate of the point of tangency of the vector to the spline at the keyed angle
2	Angle=75.000 Angle=75,0,0 Rc=0.89825 Curve=1.1133	1) Displays the angle of the tangent vector 2) Displays the angle of the tangent vector (Degrees, Minutes, Seconds; the radius of curvature (Rc = 0.89825) and the spline curvature (1/Rc = Curve = 1.1133). The radius of curvature at the point of analysis on the spline is equal to the radius of a circle whose curve is identical to the curve of the spline at that point.

INFORMATION MESSAGE: Det spline				
ANALYZE DISPLAY LINE NO.	**DISPLAY LINE**			**DESCRIPTION**
3	X=2.4378 TI=0.25882	Y=1.4055 TJ=0.96593	Z=0.00000 TK=0.0000	1) X,Y and Z are the locations of the points related to the principal axis of the primary view 2) TI, TJ and TK are the components of the curve tangent, parallel to the orthogonal axis of the principal axis of the primary view.

NOTE: The tangent vector is located closest to the location the spline is selected. This can be important to know since on a spline there may be several locations where a vector could be drawn at a fixed angle. Therefore, select the spline closest to the location where you want the tangent spline drawn.

9) ANALYZING A LINEAR SPLINE

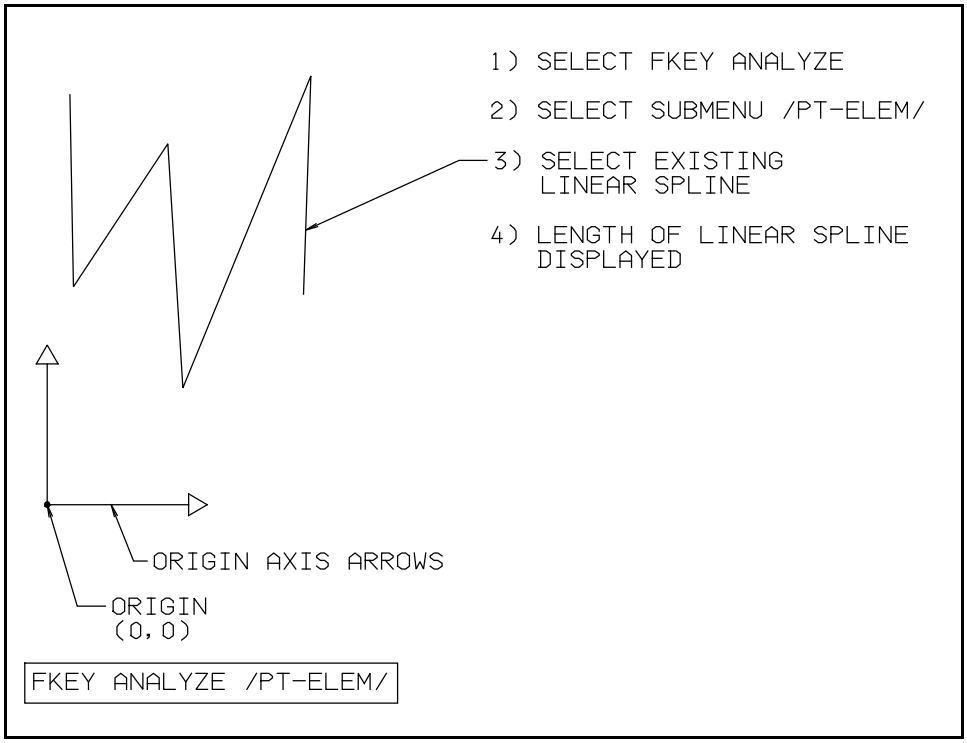

Figure 11 An example for analyzing a linear spline.

INFORMATION MESSAGE: Det linear spline		
ANALYZE DISPLAY LINE NO.	**DISPLAY LINE**	**DESCRIPTION**
1	Length=11.762	Displays the overall length of the linear spline

10) ANALYZING A CONIC

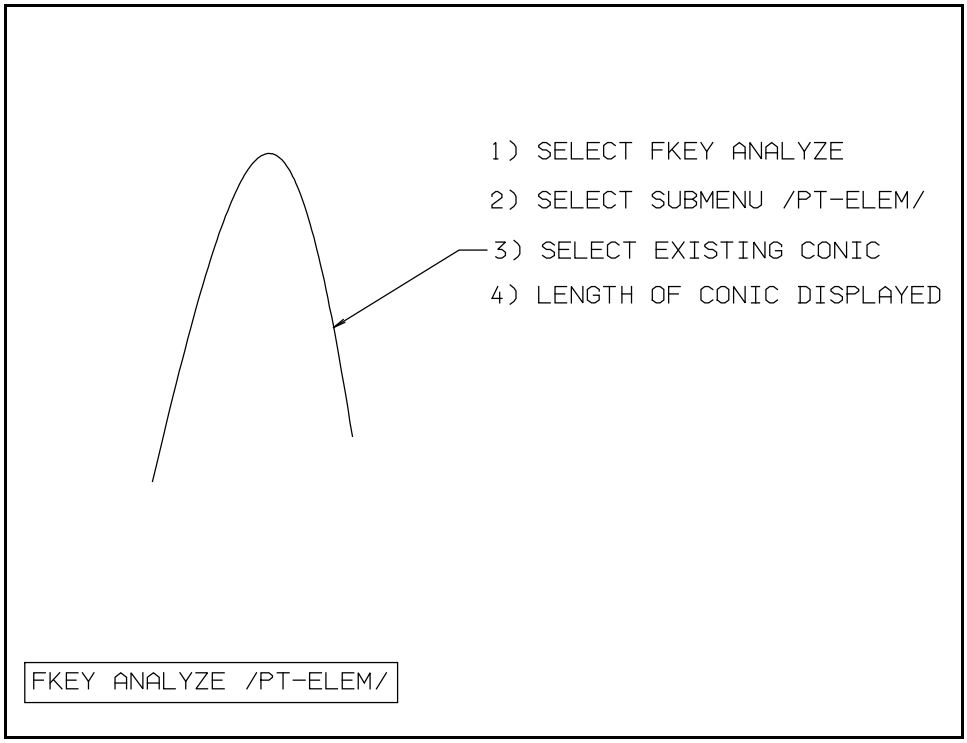

Figure 12 An example for analyzing a conic.

INFORMATION MESSAGE: Det conic		
ANALYZE DISPLAY LINE NO.	**DISPLAY LINE**	**DESCRIPTION**
1	Length=6.6412	Displays the overall length of the conic

11) ANALYZING AN AXIS

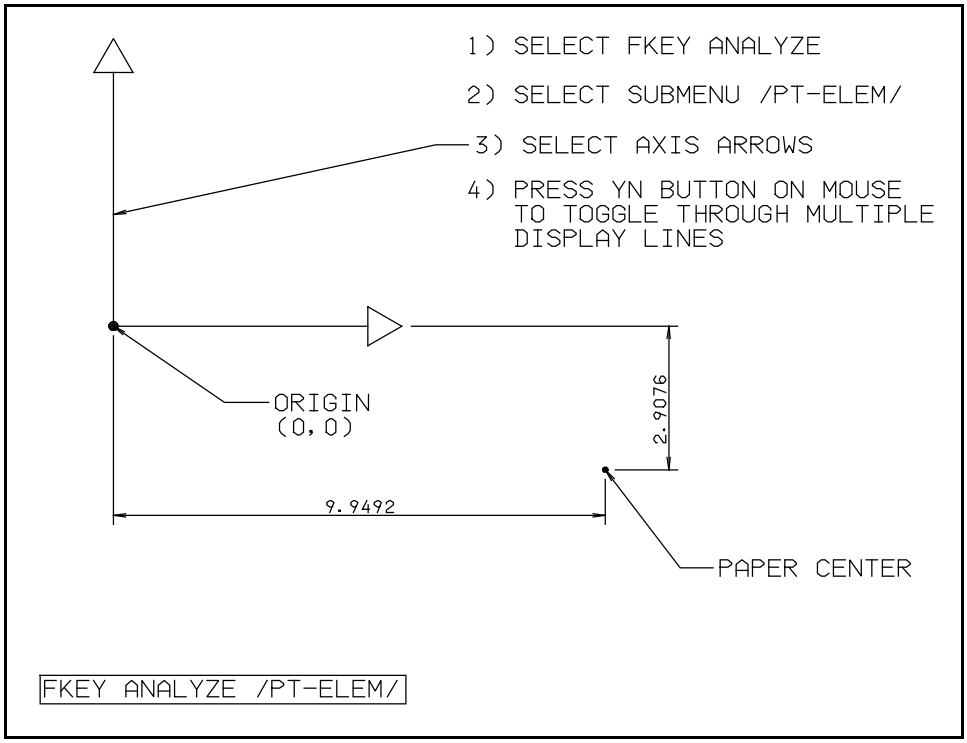

Figure 13 An example for analyzing an axis.

INFORMATION MESSAGE: Det axis				
ANALYZE DISPLAY LINE NO.	**DISPLAY LINE**			**DESCRIPTION**
1	X=9.9492	Y=2.9076	Paper coordinates	Displays the position of the axis origin relative to Paper coordinates (i.e. paper center). See Figure 14 on page 19.
2	A=1.0000	B=0.0000	Scale=1.000	Displays the unit vectors A and B, and the Scale of the view
3	3D:X=0.00000	Y=0.00000	Z=0.00000	Displays the first coordinates of the axis origin relative to Paper coordinates (i.e. paper center)

INFORMATION MESSAGE: Det axis					
ANALYZE DISPLAY LINE NO.	**DISPLAY LINE**				**DESCRIPTION**
4	A=1.0	B=0.0	C=0.0	X-dir	Displays the X direction values for the rotation and translation matrix. The rotation matrix relates a user-defined auxiliary view coordinate system (X_A, Y_A, Z_A) to the primary view coordinate system (X, Y, Z)
5	A=0.0	B=1.0	C=0.0	Y-dir	Displays the Y direction values for the rotation and translation matrix. The rotation matrix relates a user-defined auxiliary view coordinate system (X_A, Y_A, Z_A) to the primary view coordinate system (X, Y, Z)
6	A=0.0	B=0.0	C=1.0	Z-dir	Displays the Z direction values for the rotation and translation matrix. The rotation matrix relates a user-defined auxiliary view coordinate system (X_A, Y_A, Z_A) to the primary view coordinate system (X, Y, Z)
7	X=0.0000	Y=0.0000	Z=0.0000	Origin	Displays the Origin direction values for the rotation and translation matrix. The rotation matrix relates a user-defined auxiliary view coordinate system (X_A, Y_A, Z_A) to the primary view coordinate system (X, Y, Z)

The relationship between auxiliary views and paper center is illustrated in Figure 14 on page 19. In this illustration a drafting board represents the electronic drawing area of 20,000 units x 20,000 units. The center of this drawing area (i.e. the middle of the drafting board) is called paper center (PC). Paper center never moves because the middle of the drafting board never moves.

The paper in position #1 (i.e. Aux View PV) is located with its' center lined up on top of the middle of the drafting board. In other words, the origin and axis of Aux View PV is located on top of paper center. This is the default position whenever you start a blank Micro CADAM drawing. If you analyzed the origin in this position, you would see X=0.000 andY=0.000 since the Aux View origin is directly on top of paper center. Whenever you CALL a Micro CADAM drawing off of the hard disk, it loads with paper center at the middle of the computer screen. This is one way that you can always check to see where paper center is located.

The paper in position #2 (i.e. Aux View FV) has been moved to a different position on the drawing board. The origin and axis of Aux View FV is no longer sitting on top of paper center. When you analyze the origin axis for Aux View FV in this position, you would see something like: X=-4.25, Y=-4.25. This means that paper center is located 4.25 units to the left and 4.25 units to the bottom.

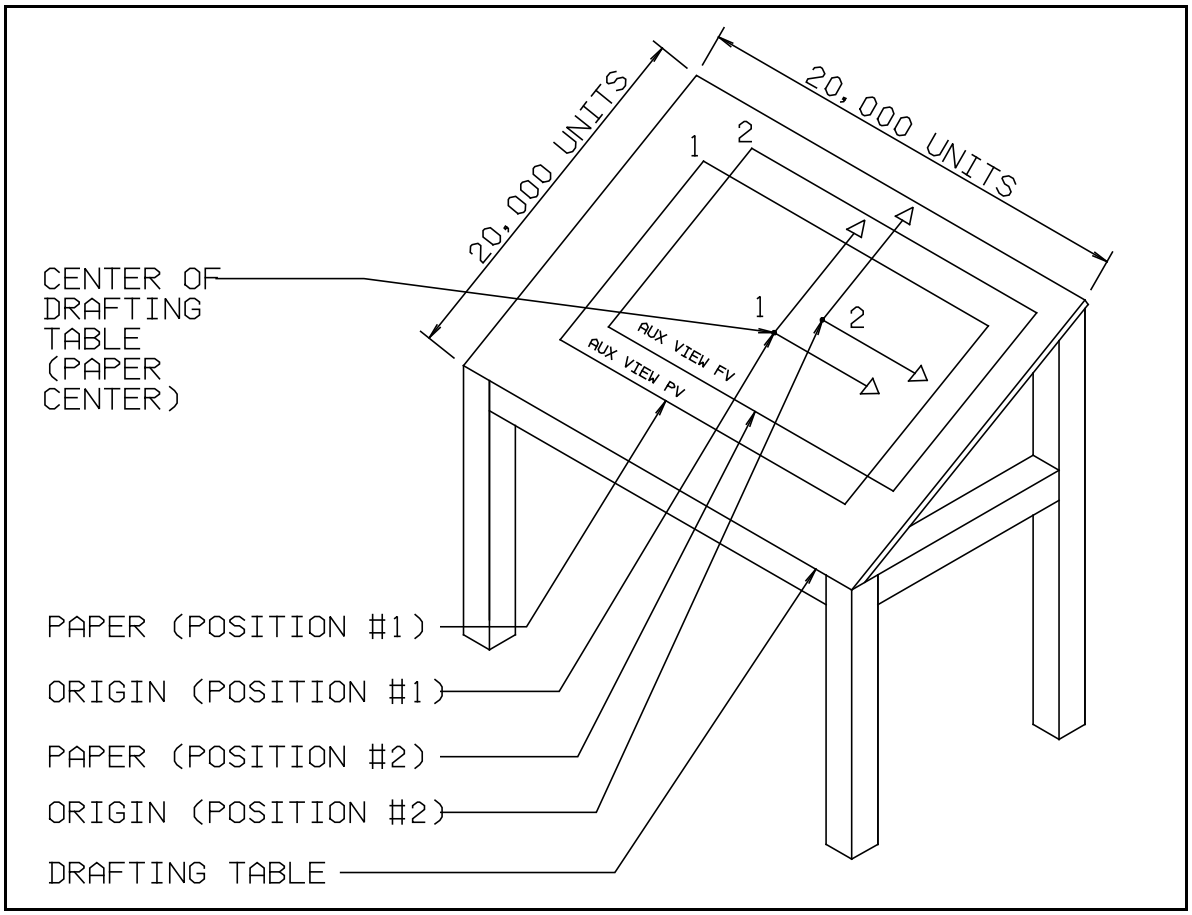

Figure 14 An example showing how an auxiliary view axis is positioned relative to paper center.

Paper center is important for three reasons:

1) When you are overplotting multiple drawings on top of each other, they all align on top of paper center. Think of this as taking several paper drawings to be plotted on top of each other, and sticking a pin through the paper center of each one to align them.

2) When creating overlay drawings (a capability available in the commercial versions of Micro CADAM) all of the overlay drawings align on top of paper center.

3) When using the FKey /WINDOW/ SubMenu /OVRLY/ to overlay two drawings on top of each other (perhaps to see how they will line up when overplotted) the drawings align on their paper centers.

NOTE: Paper center is the center of the 20,000 unit x 20,000 unit Micro CADAM drawing area. Paper center never moves. Each auxiliary view can have the center of its axis (or origin...i.e. the 0,0 point) at any place on this drawing area. When you analyze an axis, the analysis will tell you how far away from paper center (also known as PC) it is.

This can be illustrated by looking at your old drafting board. The drafting board is a piece of wood with fixed dimensions to which the drafting machine is attached. The center of this drafting board never moves. Let's call the center of the board the paper center (PC). Lets say you place an E size drawing sheet on your drafting board such that the center of the E size sheet lines up with the center of your board. This E size drawing sheet acts like auxiliary view PV. The E size drawing sheet is aligned with the center of the board just like auxiliary view PV is lined up with paper center when a blank drawing is first started.

Lets say that you now move the E size drawing sheet to another position on your drafting board. The center of the board does not move, but the center of the E size sheet is now located somewhere else on the drafting board. The distance between the center of the E size sheet and the center of the drafting board is the answer you will receive when you analyze the axis of the E size drawing sheet.

Let's say we call this E size drawing sheet 'View PV'. Let's place 2 more E size sheets on top of the first sheet and give them the names 'View FV' and 'View SV' and let's say that each sheet knows exactly where the location of the other sheets are (i.e. they are geometrically related). This is how auxiliary views in Micro CADAM are related to each other and the paper center. (The only difference is that each drawing sheet is transparent so that you can look through and see through to the other sheets)

12) ANALYZING SYMBOLS, DITTOS, NOTES AND DIMENSIONS

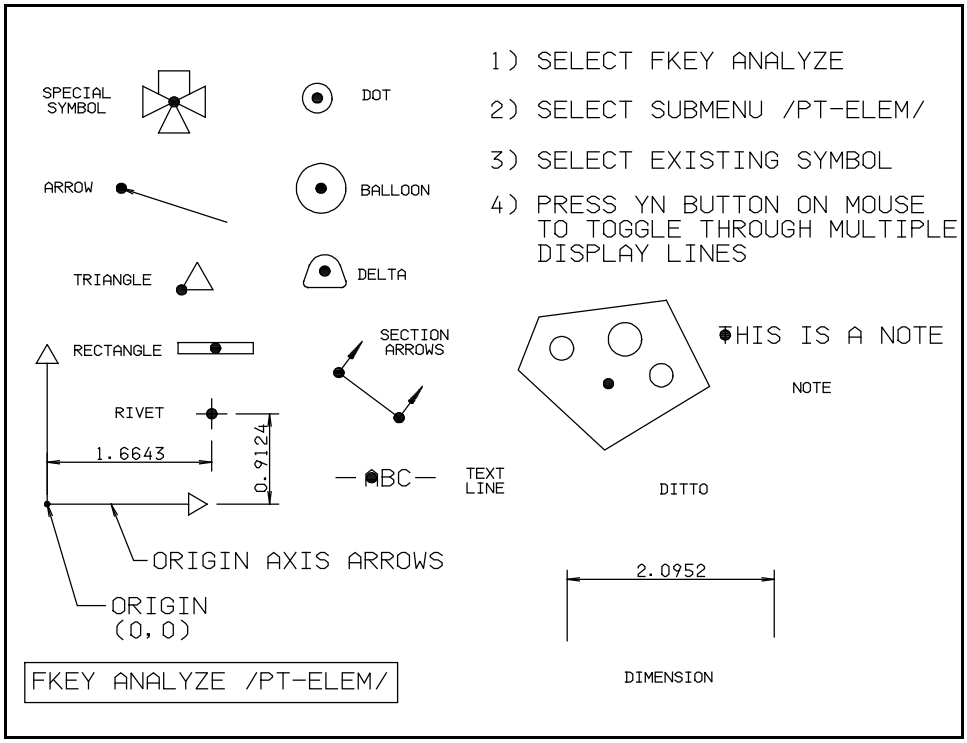

Figure 15 An example for analyzing symbols, dittos, notes and dimensions.

INFORMATION MESSAGE: Det ellipse			
ELEMENT ANALYZED	**INFORMATION MESSAGE**	**DISPLAY LINE**	**DESCRIPTION**
Special Symbol	Det symbol	X=1.2833 Y=4.0677	Displays the coordinates of the definition point of the symbol
Arrow	Det arrow	X=0.7500 Y=3.1933	Displays the coordinates of the definition point of the arrow
Triangle	Det triangle	X=1.3595 Y=2.1669	Displays the coordinates of the definition point of the triangle
Rectangle	Det rectangle	X=1.7024 Y=1.5776	Displays the coordinates of the definition point of the rectangle
Rivet	Det rivet	X=1.6643 Y=0.9124	Displays the coordinates of the definition point of the rivet

INFORMATION MESSAGE: Det ellipse			
ELEMENT ANALYZED	**INFORMATION MESSAGE**	**DISPLAY LINE**	**DESCRIPTION**
Dot	Det dot	X=2.7309 Y=4.1057 Radius=0.1500	Displays the coordinates of the definition point of the dot
Balloon	Det balloon	X=2.7690 Y=3.1933 Radius=0.2500	Displays the coordinates of the definition point of the balloon
Delta	Det delta	X=2.8071 Y=2.3570	Displays the coordinates of the definition point of the delta
Section Arrows	Det section	X=2.9488 Y=1.3291	Displays the coordinates of the definition point of the section arrow
Text Line	Det textline	X=3.2808 Y=0.26611	Displays the coordinates of the definition point of the text line
Ditto	Det ditto	X=5.6761 Y=1.2165	Displays the coordinates of the definition point of the ditto
Note	Det text	X=6.8570 Y=1.7107	Displays the coordinates of the definition point of the text
Dimension	Det ISO dimens		Displays the type of dimension (ISO)

NOTE: Each of the symbols, dittos, notes and dimensions have filled dots showing the location of the point that FKey ANALYZE will display the coordinates of.

13) ANALYZING THE DISTANCE BETWEEN TWO ELEMENTS

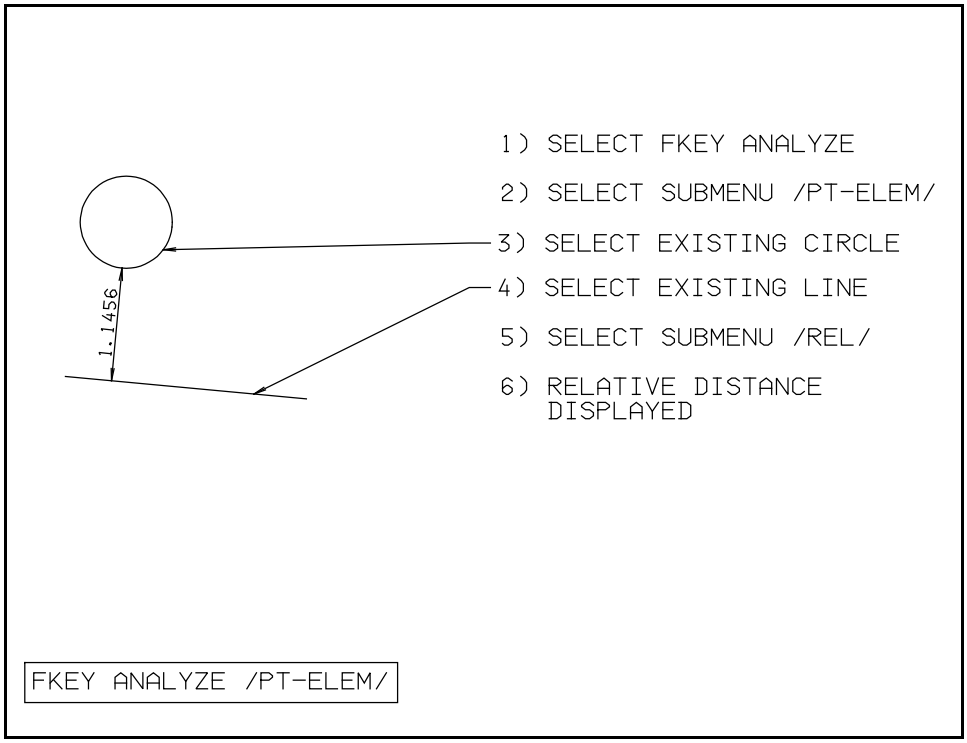

Figure 16 An example for analyzing the distance between two elements.

INFORMATION MESSAGE:				
ANALYZE DISPLAY LINE NO.	**DISPLAY LINE**			**DESCRIPTION**
1	Rel dist=1.1456	Delta X=0.1067	Delta Y=1.1406	Displays the closest distance between the two elements and the delta X and delta Y components of this distance.

FKey ANALYZE

SUBMENU / SECTION /

ADVANCED SECTION

Fkey ANALYZE SubMenu /SECTION/ allows you calculate the section properties of an element or a set of elements. Examples of the different types of pt/element analysis are listed with page numbers as follows:

FKey ANALYZE SubMenu /SECTION/		
ANALYZE NO.	**DESCRIPTION**	**PAGE NO.**
1	General example of section properties calculated by the boundary element method	10-29
2	Section properties example with common structural sections	10-32
3	Section properties example to calculate volume about center of revolution	10-35
4	General example of section properties by the centerline method	10-36
5	How to create your own section analysis formats	10-38

To analyze section properties follow these general steps:

1) SELECT FKey ANALYZE.

2) SELECT SubMenu /SECTION/ (if it is not already underlined).

3) SELECT the first element you want to analyze. Add additional elements that share endpoints by SELECTING SubMenu /CHAIN/. When finished with the 'chain' SELECT SubMenu /ADD/ or /SUB/ to add or subtract the properties of the set into memory storage. Repeat this process for all other sets or subsections.

4) Enter the Weight Factor when prompted. The Weight Factor takes into account the relative densities of each subsection. For example, if all parts of the section are made of the same material, use a weight factor of 1.0 for everything. (NOTE: The total area and other section parameters are dependent on the weight factor.

4) SELECT SubMenu /END/ to calculate final totals and indicate a position on the screen where you want the results to be displayed.

Section properties can be calculated by the boundary method or the centerline method. The boundary method selects (or chains) elements defining the boundary of the section. The centerline method keys in the wall thickness and then selects (or chains) elements defining the centerline of the section. The centerline method is normally used for closed sections.

SECTION PROPERTY VARIABLE NAMES:

The section properties of a polygon, circle or ellipse are displayed on the screen as Micro CADAM notes in the standard note size (usually .164062 inches). The variable names and their meanings are described below:

- **AREA** Net area of the section
- **XBAR** X coordinate of the centroid
- **YBAR** Y coordinate of the centroid
- **IY-Y** Moment of Inertia parallel to the current Y axis and about the centroid
- **IX-Y** Product of Inertia about the centroid with respect to the current
- **IX-X** Moment of Inertia parallel to the current X axis and about the centroid
- **RY-Y** Radius of gyration parallel to the current Y axis and about the centroid (Ryy=Iyy/A)
- **RX-X** Radius of gyration parallel to the current X axis and about the centroid (Rxx=Ixx/A)
- **ZETA** Angle between the principal axis and the basic axis systems
- **IPY-Y** Moment of Inertia about the principal Y axis
- **IPX-X** Moment of Inertia about the principal X axis
- **RPY-Y** Radius of gyration about the principal Y axis
- **RPX-X** Radius of gyration about the principal X axis
- **LENG** Total perimeter (or circumference) of all elements selected

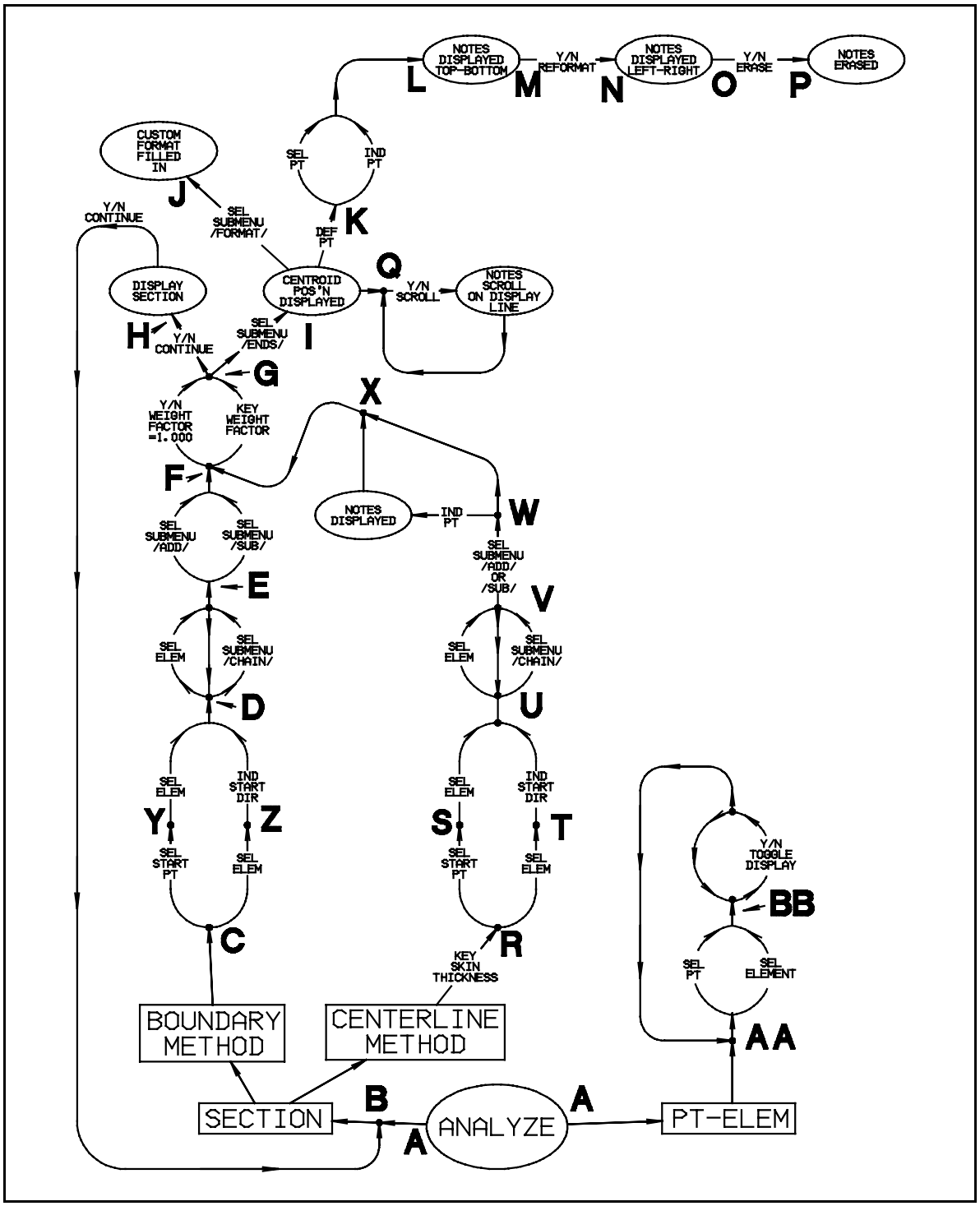

Figure 17 The Advanced Road Map for FKey ANALYZE SubMenu /SECTION/.

1) GENERAL EXAMPLE OF SECTION PROPERTIES CALCULATED BY THE BOUNDARY ELEMENT METHOD:

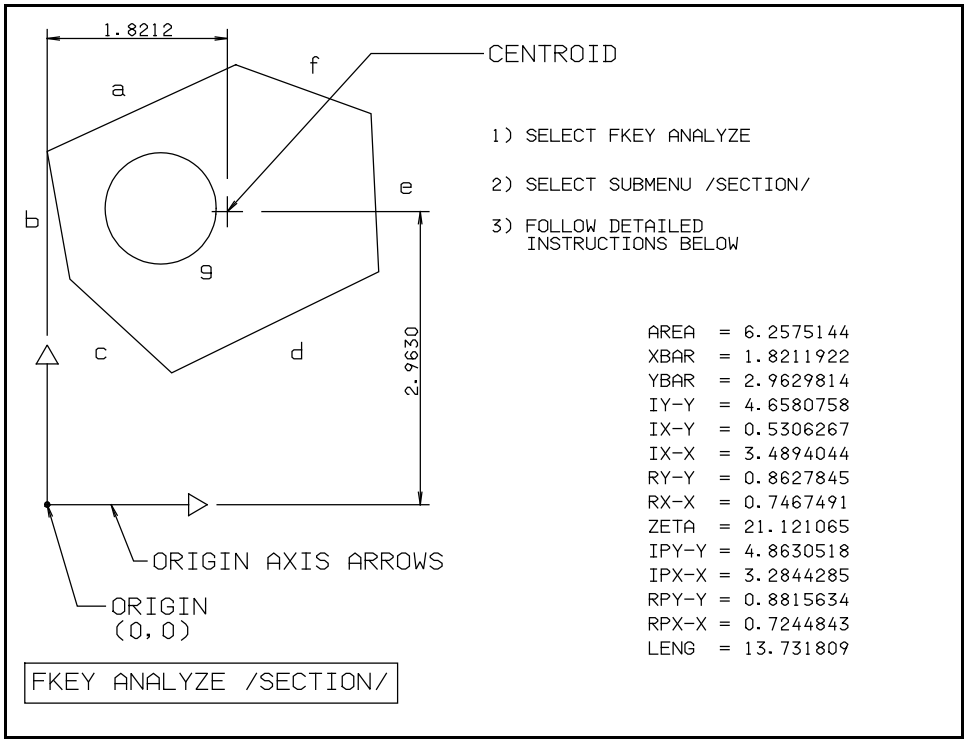

Figure 18 A general example of section properties calculated by the boundary method

The section properties are calculated by boundary method as follows:

1. **SELECT FKey ANALYZE**

2. **SELECT SubMenu /SECTION/**

3. **Add calculated properties of the polygon (i.e. a,b,c,d,e,f) into your memory register.**

   a. SELECT starting element a

   b. INDICATE to the right side of element a. This will become the starting direction.

   c. SELECT SubMenu /CHAIN/ repeatedly to chain the boundary elements from a

to b to c to d to e to f. (Note that the elements may also be SELECTED one after the other instead of using SubMenu /CHAIN/). The element boundary is now closed. (Note that if the element boundary is not closed, an imaginary line is drawn from the starting element to the ending element in order to close the section.)

d. SELECT SubMenu /ADD/ to add this section into the register. Think of this register as a memory on your calculator. When you select SubMenu /ADD/ you are adding into the memory register (like M+) and when you SELECT SubMenu /SUB/ you are subtracting out of the memory register (like M-). Thus you can repeatedly add and subtract into the register until you have completed your section. Note that SubMenu /SUB/ is normally used for subtracting holes out of a solid section.

e. Press the Y/N button on the mouse to accept the weight factor = 1.0000.

f. Press the Y/N button on the mouse to continue and display the boundary for which the present subset of properties is being calculated.

g. Press the Y/N button on the mouse to continue and select more elements.

4. **Subtract calculated properties of the circle (i.e. g) from your memory register.**

a. SELECT element g (the circle)

b. SELECT SubMenu /SUB/ to subtract these properties from the memory register.

c. Press the Y/N button on the mouse to accept the weight factor = 1.0000.

5. **Finish the calculations:**

a. SELECT SubMenu /END/. This finishes adding and subtracting all values in the register and prepares the final answer.

b. Display the results ANY ONE of the following THREE ways:

i. INDICATE a position to display the note. The notes will be displayed in the first format type at the indicated position.

(1) (OPTIONAL) Press the Y/N button on the mouse to reformat the note results to the second format type.

(2) (OPTIONAL) Press the Y/N button on the mouse one more time and the notes will be erased.

ii. Press the Y/N button on the mouse to scroll the note display across display line #1 near the top of the screen. Continue pressing the Y/N button to toggle between the different sets of notes.

iii. SELECT SubMenu /FORMAT/ and the notes will be applied to your own custom format. See section 5 on page 10-38 for instructions on how to create your own custom format.

The two different types of note formats are shown in the figure below:

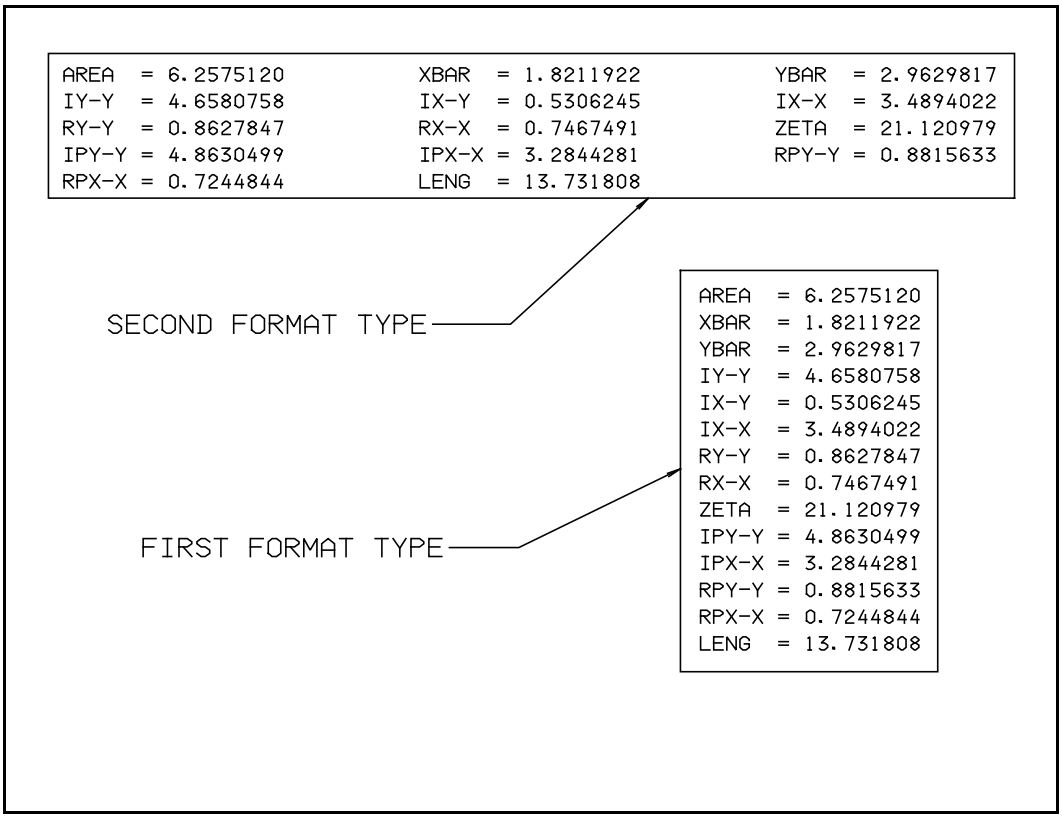

Figure 19 Two different types of note formats.

2) A SECTION PROPERTIES EXAMPLE WITH COMMON STRUCTURAL SECTIONS:

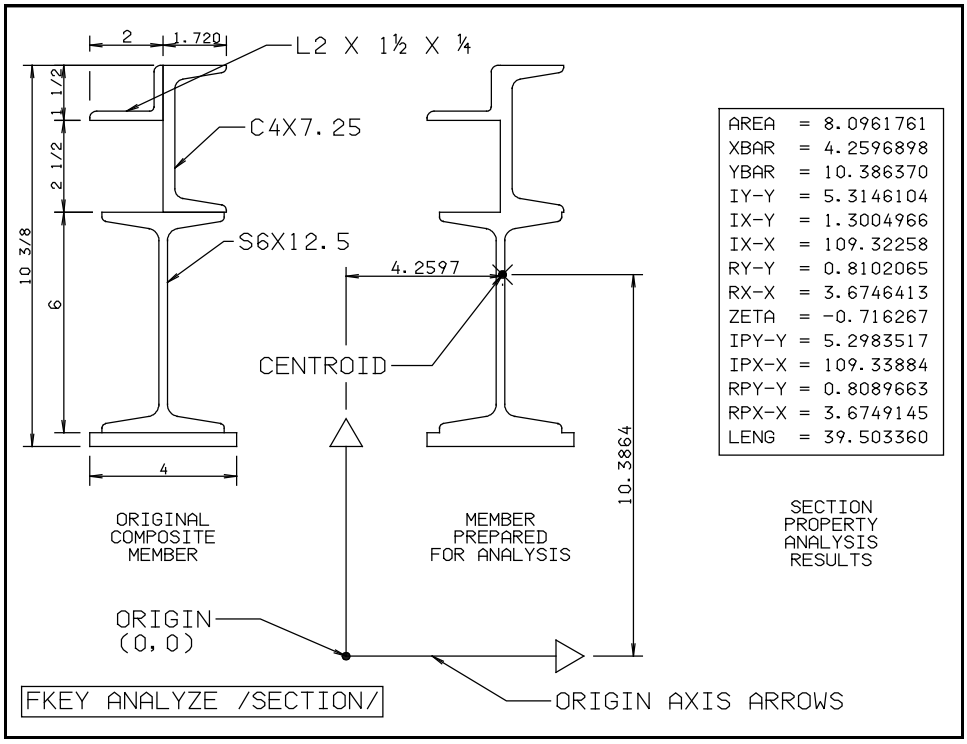

Figure 20 Preparation of a composite section prior to calculating section properties.

The structural sections have been arranged as shown in Figure 20 above. To speed the analysis the original composite member has been prepared by breaking and relimiting lines so that the boundary forms one contiguous line and enables efficient use of SubMenu /CHAIN/. Note that it is not mandatory for the composite member to be prepared as shown; you can also keep selecting elements that form the boundary. The disadvantage of this approach is that some of the elements are very small and a lot of windowing in and out is required.

After preparing the composite section, the section properties are calculated as shown in Figure 21 below.

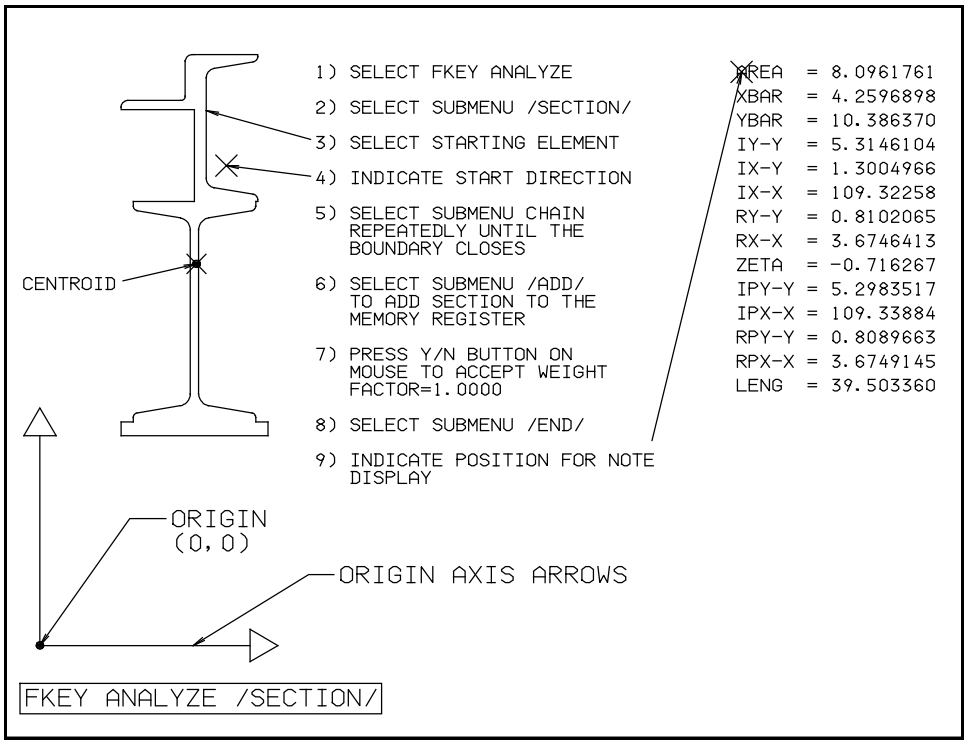

Figure 21 An example of section properties calculation of a composite beam with common structural sections.

3) AN EXAMPLE OF SECTION PROPERTIES USED TO CALCULATE A VOLUME ABOUT THE CENTER OF REVOLUTION:

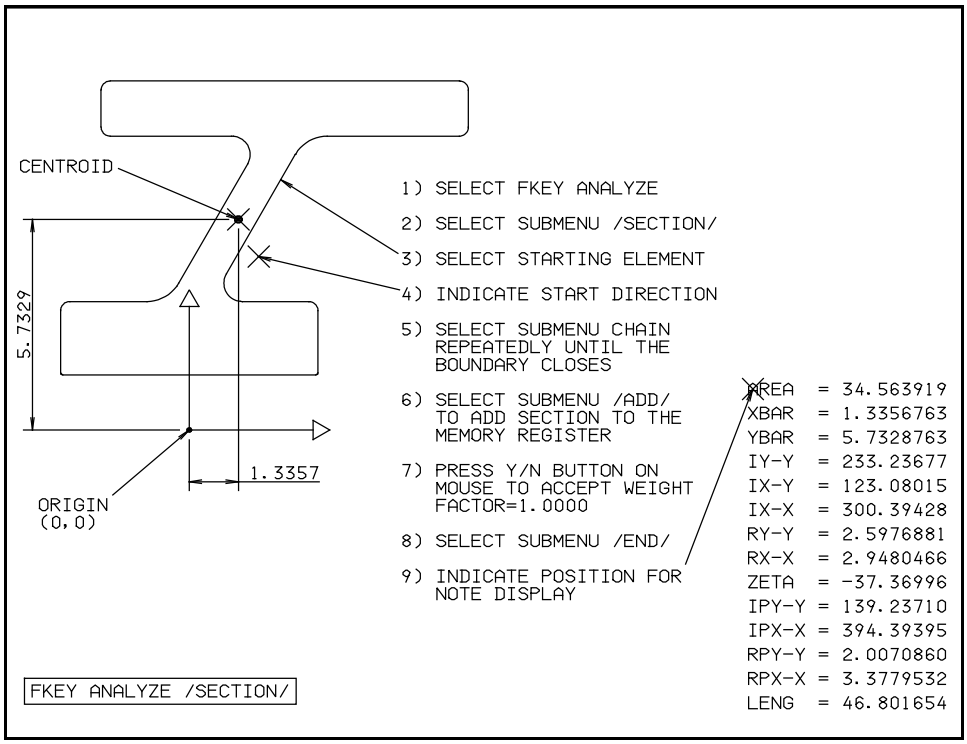

Figure 22 Section properties calculation of a brake drum with center of revolution around the origin

The brake drum cross section has been placed with its center of revolution on the origin axis to simplify the calculations. An isometric of the brake drum can be seen in Figure 23 on page 35. The section properties are calculated using the boundary method and are shown in detail in Figure 22.

The calculation of the volume of the brake drum is an application of one of the theorems of Pappus. The Theorem of Pappus states:

If a plane area *A* is rotated about a line *l* in the plane *A* and not cutting *A*, the volume of the solid generated is equal to the product of *A* and the distance travelled by the center of gravity of *A*.

Basically what this means is that you take the total area of the cross section, concentrate it at the

centroid of the section, and spin it 360 degrees around the center of revolution. The total area of the cross section travels along the circumference generated by the centroid (i.e. Circumference = 2 x PI x Radius to Centroid).

Once the volume is known, the weight of the brake drum can be calculated.

Figure 23 below shows the calculations in more detail:

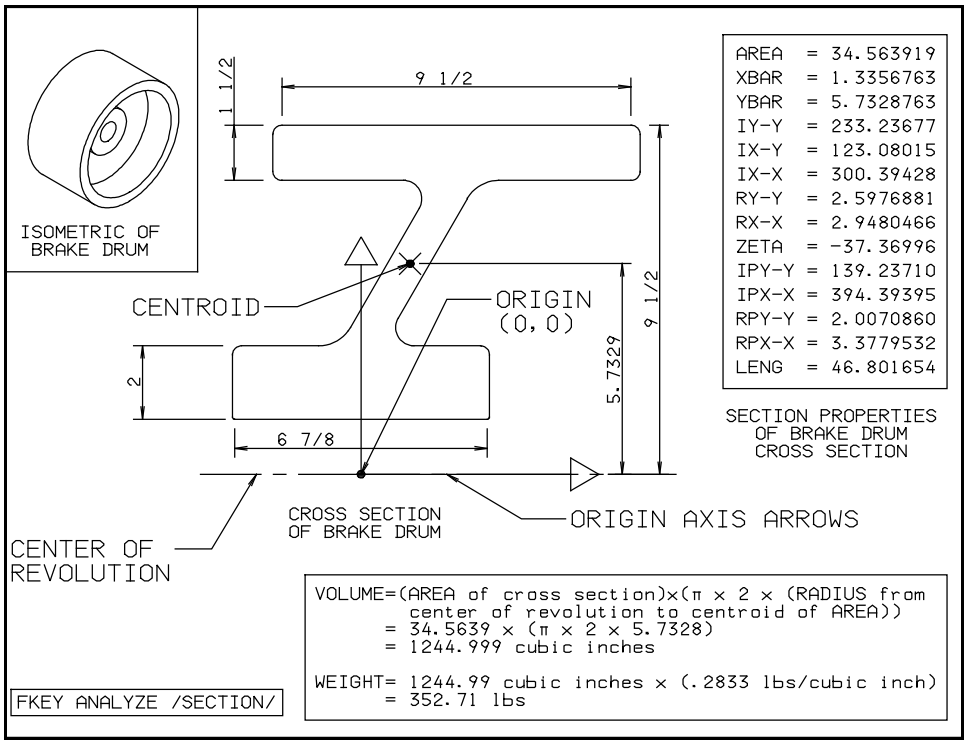

Figure 23 Volume and weight calculations of a brake drum with center of revolution around the origin

4) GENERAL EXAMPLE OF SECTION PROPERTIES CALCULATED BY THE CENTERLINE METHOD:

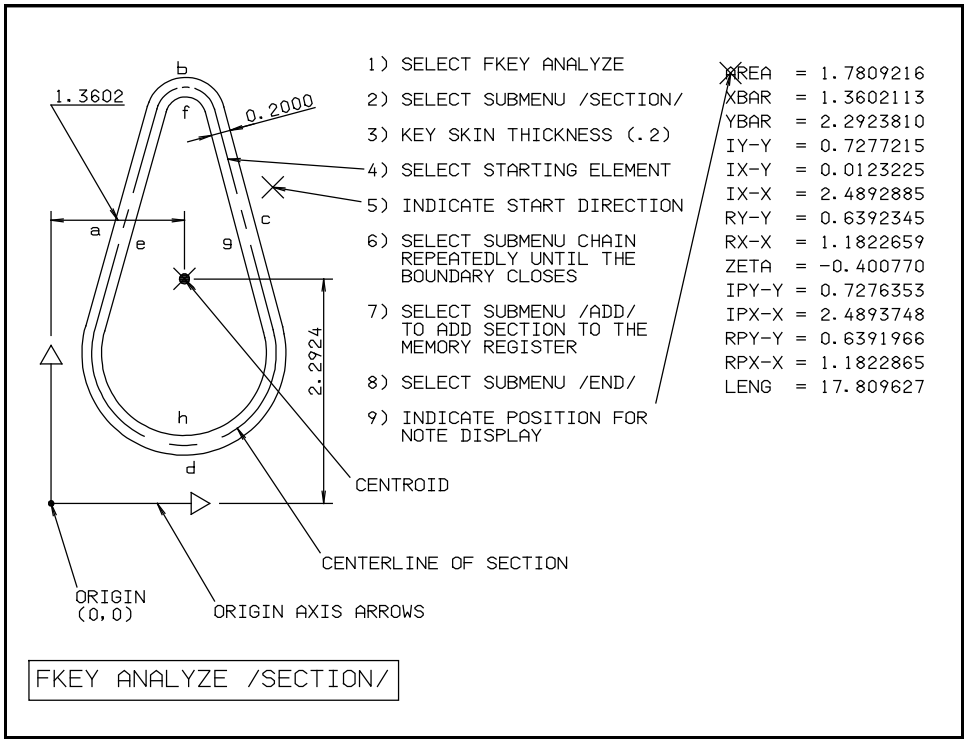

Figure 24 A general example of section properties calculated by the centerline method

The centerline method of calculating section properties is one option for those section properties that are closed and have a constant skin thickness. The boundary method could also be used, but would involve 'adding' the area of the outside boundary and the 'subtracting' the area of the inside boundary to leave a difference that would the be the skin thickness. Both methods will give the same result, but the centerline method is simpler for those sections that it can be used on.

The section properties are calculated by centerline method as follows:

1. **SELECT FKey ANALYZE**

2. **SELECT SubMenu /SECTION/**

3. **Add calculated properties of the cross section into your memory register.**

   a. KEY the skin thickness (.2). Note that this skin thickness is the total thickness of the skin. The distance from the centerline to the outside of the skin would then be half of the keyed thickness.

   b. SELECT one of the centerline elements for the starting element.

   c. INDICATE to the top of the selected starting element. This will become the starting direction.

   d. SELECT SubMenu /CHAIN/ repeatedly to chain the centerline elements from start to finish. (Note that the elements may also be SELECTED one after the other instead of using SubMenu /CHAIN/). The element centerline is now closed.

   e. SELECT SubMenu /ADD/ to add this section into the register. Think of this register as a memory on your calculator. When you select SubMenu /ADD/ you are adding into the memory register (like M+).

4. **Finish the calculations:**

   a. SELECT SubMenu /END/. This finishes and prepares the final answer.

   b. Display the results ANY ONE of the following THREE ways:

      i. INDICATE a position to display the note. The notes will be displayed in the first format type at the indicated position.

         (1) (OPTIONAL) Press the Y/N button on the mouse to reformat the note results to the second format type.

         (2) (OPTIONAL) Press the Y/N button on the mouse one more time and the notes will be erased.

      ii. Press the Y/N button on the mouse to scroll the note display across display line #1 near the top of the screen. Continue pressing the Y/N button to toggle between the different sets of notes.

      iii. SELECT SubMenu /FORMAT/ and the notes will be applied to your own custom format.

5) HOW TO CREATE YOUR OWN CUSTOM SECTION ANALYSIS FORMATS:

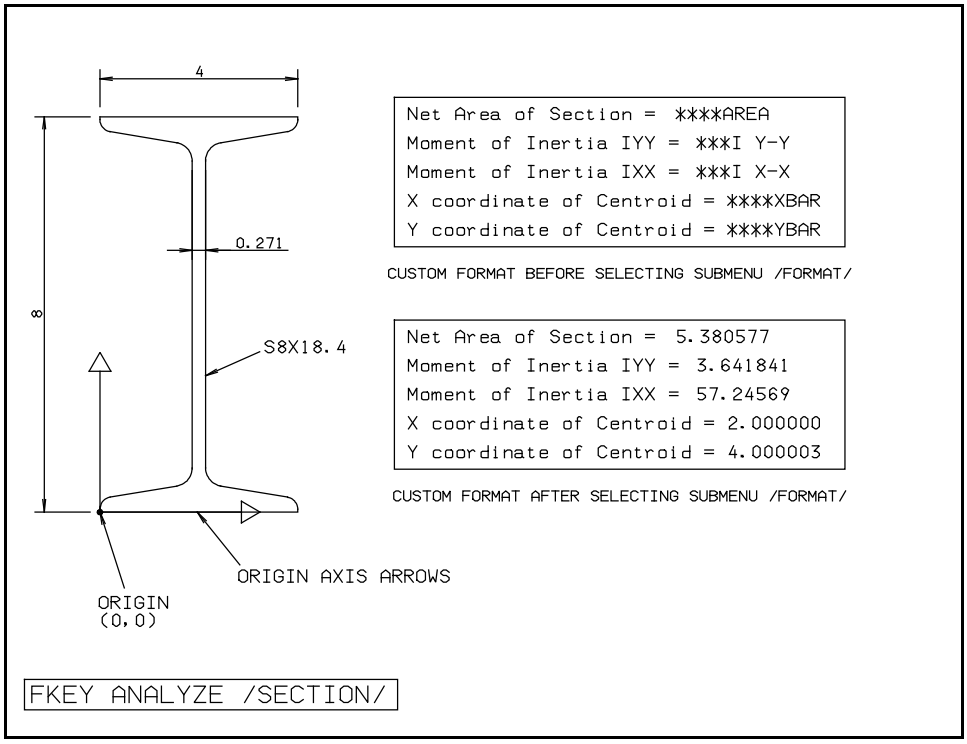

Figure 25 An example showing creating of your own custom section analysis format.

There are two predefined output formats for section analysis (see Figure 19 on page 10-31). You may also create your own custom output format. Here is how:

1. Make notes with the XXXX variables (as explained below).

2. Perform the section analysis.

3. SELECT submenu /FORMAT/ to copy your section analysis results onto the XXXX variables.

When creating notes with the XXXX variables, the custom output format must follow these rules:

1. Use Fkey NOTE SubMenu /NOTE/ (or SubMenu /GEN NOTE/) to create the format item text.

2. Use all capital letters in the format item text.

3. Do not add any spaces or any other characters to the format items.

4. Do not change the number or asterisks preceding an item.

5. The basic format (with descriptions) is as follows:

   ****AREA (Net area of section)
   ****XBAR (X coordinate of the centroid)
   ****YBAR (Y coordinate of the centroid)
   ***I Y-Y (Moment of inertia parallel to the current Y axis and about the centroid)
   ***I X-X (Moment of inertia parallel to the current X axis and about the centroid)
   ***I X-Y (Product of inertia about the centroid with respect to current axes)
   **LENGTH (Total perimeter (or circumference) of all elements selected)
   ***R Y-Y (Radius of gyration parallel to current Y axis and about the centroid)
   ***R X-X (Radius of gyration parallel to current X axis and about the centroid)
   ****ZETA (Angle between principal axis and the basic axis system)
   **P X-X (Moment of inertia about the principal X axis)
   **P Y-Y (Moment of inertia about the principal Y axis)
   **RP Y-Y (Radius of gyration about the principal Y axis)
   **RP X-X (Radius of gyration about the principal X axis)

The number of digits displayed can vary from 8 digits to 12 digits. These formats will display 8 digit results. To display more digits just add asterisks onto the end of the format definition. For example: ****AREA**** will print AREA to twelve digits.

The format definitions are replaced by the actual section properties when you SELECT SubMenu /FORMAT/. These definitions can be located anywhere in the drawing. You may elect to have only one or two of the format definitions in your drawing, or you could have them all.

If you want to make the format definitions part of a longer note you must make the note in

separate parts. For example, lets say you wanted your note to read:

"The total area of the section is 12.981347 square inches"

This line must be made from three separate notes as follows:

NOTE 1: The total area of the section is

NOTE 2: ****AREA

NOTE 3: square inches

Therefore the note before SubMenu /FORMAT/ is SELECTED would read as:

The total area of the section is ****AREA square inches

After SubMenu /FORMAT/ is SELECTED the note will read:

The total area of the section is 12.981347 square inches

CHAPTER 11

FKey POINT

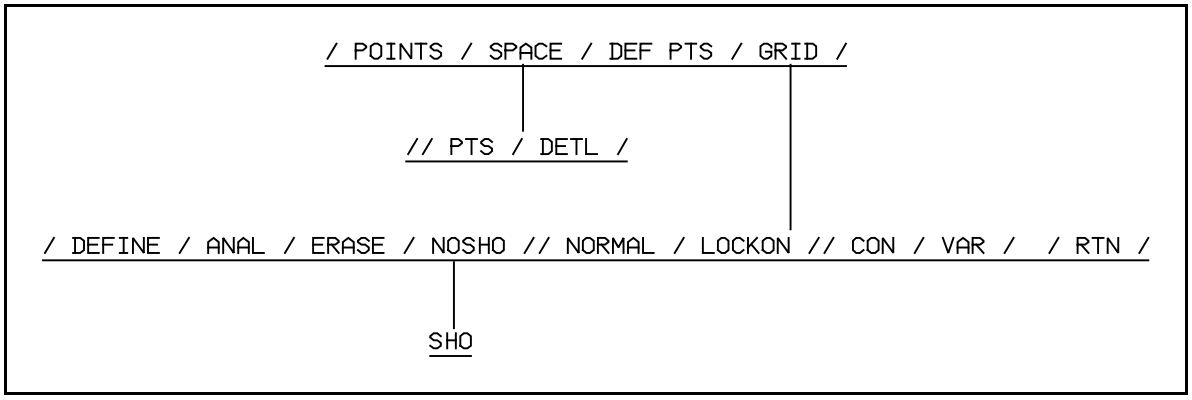

Figure 1 - Menu Item Tree for FKey POINT

Micro CADAM is a point based CAD program. This means that elements (an element is a point, line, circle, etc.) are defined by SELECTING points, or if points are not there by either INDICATING the locations where they would be or by KEYING in point locations.

Points have the highest priority. There may be a single point along with dozens of lines, circles, splines, etc. at one location; the cursor will always lock onto the point (assuming that it is close enough to the point). This can be an advantage or a disadvantage depending on exactly what it is you are trying to do. If you want the point, it is an advantage; if you want a line, or circle or spline you must select the line or circle or spline somewhere away from the point.

Points in Micro CADAM do not plot. Place a dot or a filled dot (under FKEY Symbol) on top of a point to get it to plot.

HINT: As an element is **SELECTED** the menu prompt line (2nd from the top of the screen) will change to something different. This will cause the prompt line to appear to 'flash' as it changes.

Sometimes when you press the select button to select an element, you will not be close enough to it. You thought you had selected the element, but missed it (i.e. it is not selected). As you proceed to the next action, you are now out of sequence on the command tree and things will not happen as you expect them to.

To ensure that you do not select something and 'miss' it (hence getting out of sequence on the command tree) be aware that the menu prompt line will 'flash' (i.e. change to something different) when the program recognizes the selection. Do not stare at the line; just be aware that it will 'flash' when the selection is successful! Your peripheral vision can usually catch this 'flash'.

FUNCTION KEY POINT SUBMENU OPTIONS:

/ POINTS /

- To create points at X,Y co-ordinates
- To create points relative to other points
- To create points midway between two existing points
- To project points onto elements
- To create points at approximate locations
- To create points at the intersection of two elements
- To create points at the corner of two diagonal points
- To create points at the end of lines
- To create points on elements at elevation Y

/ SPACE /

// PTS /

- To create points equally spaced along an entire element length or chain of elements
- To create points equally spaced along an element length between two points on the element or chain of elements
- To create points generated along an element or chain of elements at a fixed true length
- To create points generated along an element or chain of elements at spaces less than or equal to a keyed length

// DETL /

- To create dittos equally spaced along an entire element length or chain of elements
- To create dittos equally spaced along an element length between two points on the element or chain of elements
- To create dittos generated along an element or chain of elements at a fixed true length
- To create dittos generated along an element or chain of elements at spaces less than or equal to a keyed length

/ DEF PTS /

- To display the defining points of an element or group of elements

/ GRID /

/ DEFINE /

- To create grid points in a defined area

/ ANAL /

- To analyze existing grid parameters

/ ERASE /

- To erase an existing grid

/ NOSHO / SHO /

- To turn the display of a grid on or off

/ NORMAL /

- Grid points must be SELECTED to be used

/ LOCKON /

- Indicated locations will ’snap’ onto the closest grid point

// CON /

- Grid spacing is at a constant X and Y co-ordinate

// VAR /

- Grid spacing is at a variable X and Y co-ordinate

SUBMENU LOCATIONS:

Each item in a submenu has been assigned a number. For example each point has been assigned a Point Number. The same Point Number is also referenced on the Point Road Map and the Action Summary. Thus it is easy to tie each point example to its position on the Road Map and its descriptive text. The action numbers in each descriptive graphic are also tied to the same numbers in the descriptive text.

The submenus are located as follows: (Note that not every submenu has both a Beginner and Advanced section)

SUBMENU LOCATIONS

SUBMENU	PAGE NO.
/ POINT / BEGINNER	11-9
/ POINT / ADVANCED	11-17
/ SPACE / BEGINNER	11-27
/ SPACE / ADVANCED	11-31
/ DEF PTS / BEGINNER	11-45
/ GRID / ADVANCED	11-49

FKey POINT

SUBMENU / POINTS /

Each point has been assigned a Point Number. The same Point Number is also referenced on the Point Road Map and the Action Summary. The different ways to create points are divided into beginner and advanced sections and are listed with page numbers as follows:

SUBMENU / POINT /		
BEGINNER: (See Figure 2 on Page 11-10 for the Beginner Road Map for Point)		
POINT NO.	**DESCRIPTION**	**PAGE NO.**
1	Absolute Point	11-11
2	Relative Point	11-12
3	Approximate Point	11-13
4	Points created between points	11-14
5	Points projected onto elements	11-15
6	Points created at intersection of two elements	11-16
ADVANCED: (See Figure 9 on Page 11-18 for the Advanced Road Map for Point)		
POINT NO.	**DESCRIPTION**	**PAGE NO.**
7	Point created at the corner of two diagonal points (takes the X co-ordinate of one point and the Y co-ordinate of the other point)	11-19
8	Points defined at the end of lines	11-20
9	Point created on element at elevation Y	11-21

All menus in Micro CADAM are intelligent. They anticipate your actions wherever possible. The results depend on the sequence that the **SELECT, INDICATE, KEY** and **Y/N** keys are pressed. This is shown graphically in Figure 2 on page 11-10 for FKey / POINT / POINTS / and is shown in chart form below:

FKEY POINT / POINTS / ACTION SUMMARY

PT NO.	TO CREATE	1ST ACTION	2ND ACTION	3RD ACTION	4TH ACTION	NODEPATH
BEGINNER SECTION						
1	Absolute Point	KEY X,Y				A,B
2	Relative Point	SEL Pt	KEY DX,DY			A,C,H
3	Approximate Point	IND Location				A,M
4	Points created between points	SEL Pt	SEL Pt			A,C,G
5	Points projected onto elements	SEL Pt	SEL Element			A,I,J
6	Points created at intersection of two elements	SEL Element	SEL Element			A,I,N
ADVANCED SECTION						
7	Point created at the corner of two diagonal points (takes X co-ordinate of one point and the Y co-ordinate of the other point)	SEL Pt	IND Location	SEL Pt		A,C,E,F
8	Points defined at the end of lines	SEL Line	Y/N			A,I,K
9	Point created o element at elevation Y	SEL Line	KEY Distance			A,I,L

FKey POINT

SUBMENU / POINTS /

BEGINNER

SECTION

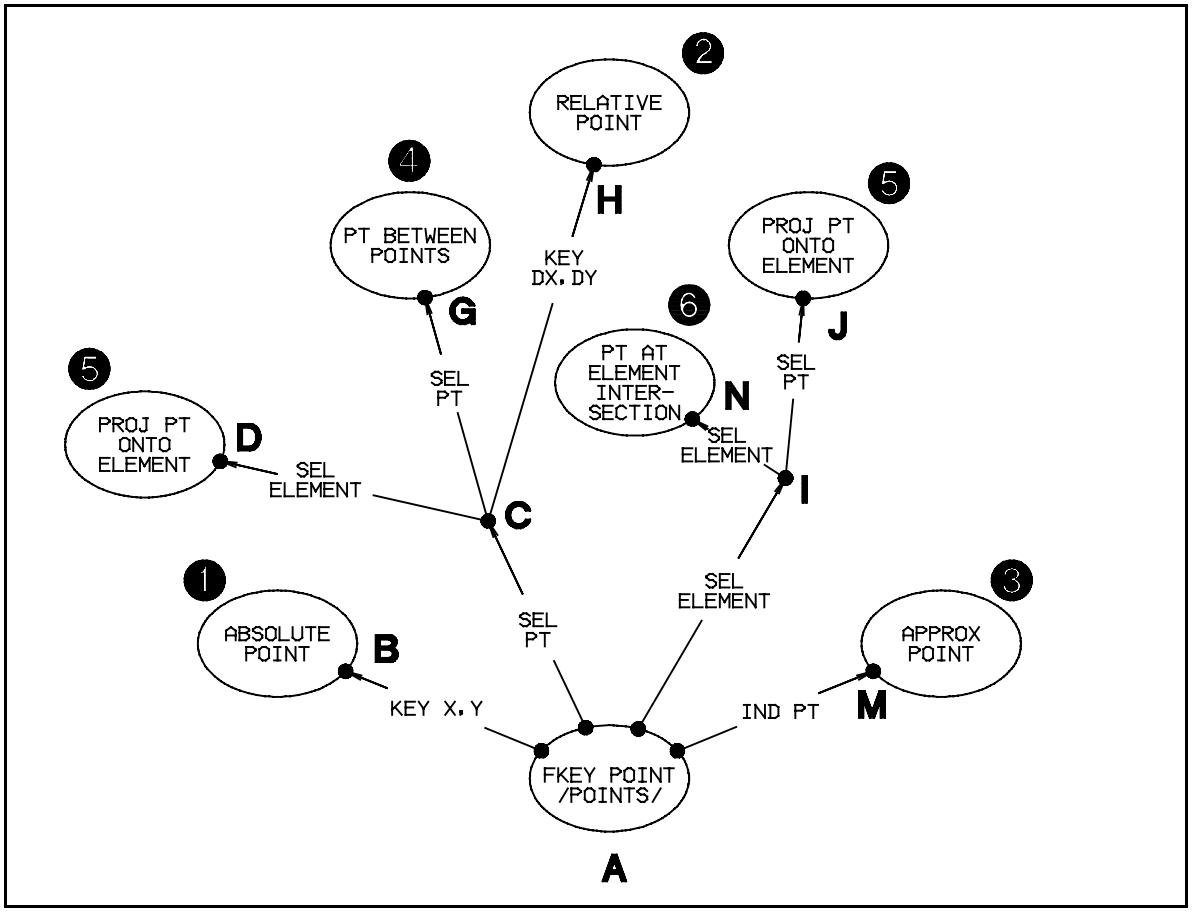

Figure 2 Beginner Road Map for FKey POINT

1) ABSOLUTE POINT:

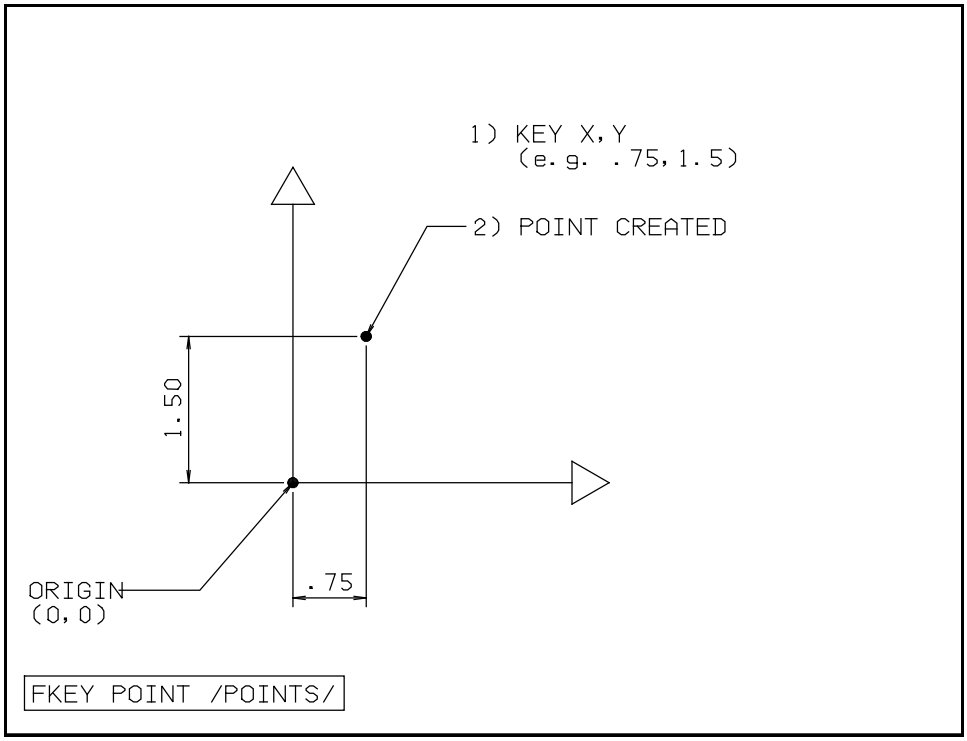

Figure 3 Example for an Absolute Point (NODE PATH A,B)

Points can be keyed in at absolute co-ordinates. To create an absolute point follow these steps:

1. SELECT FKey POINT and submenu /POINTS/.

2. Key X,Y, (e.g. .75,1.5) where X and Y are the absolute co-ordinates of the point with respect to the origin of the view. Make sure you press the ENTER key on the keyboard after typing in the numbers.

3. An absolute point is created.

2) RELATIVE POINT:

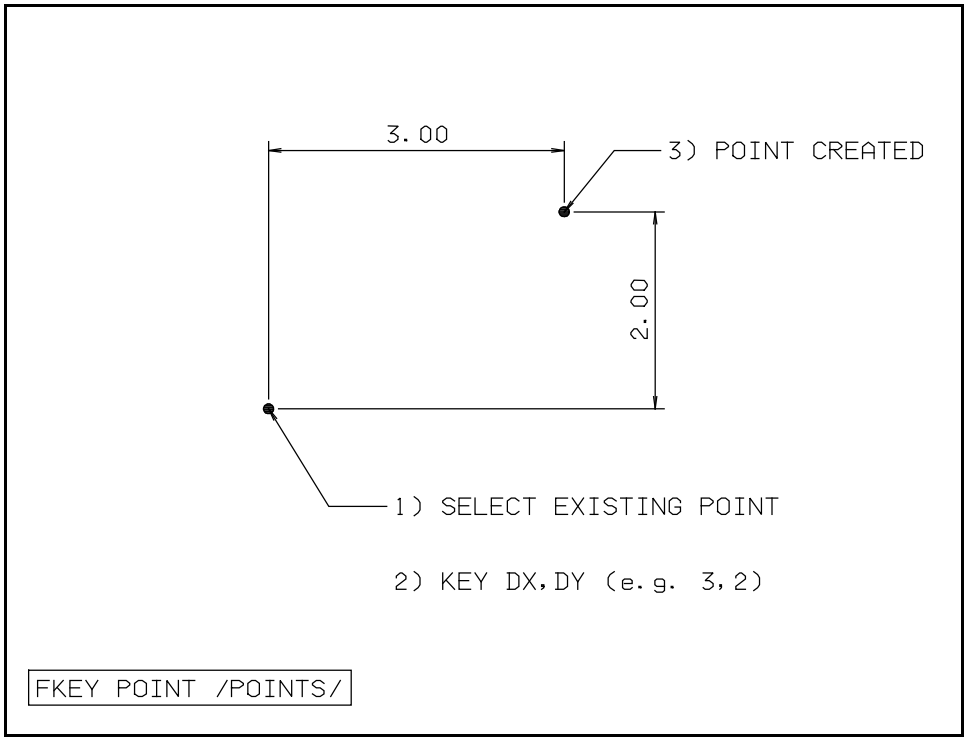

Figure 4 Example for an Relative Point (NODE PATH A,C, H)

Points can be placed relative to another point. To create a relative point follow these steps:

1. SELECT FKey POINT and submenu /POINTS/.
2. SELECT an existing point on the screen.
3. Key DX,DY (e.g. 3,2) (i.e. Delta X co-ordinate,Delta Y co-ordinate).
4. A relative point is created.

3) APPROXIMATE POINT:

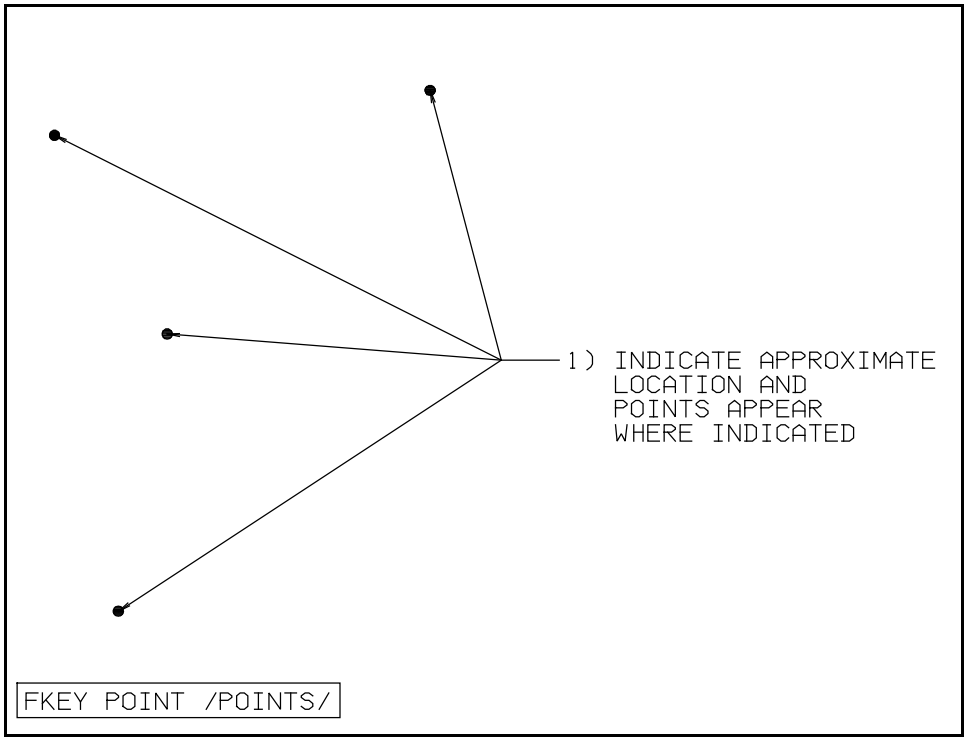

Figure 5 Example for an Approximate Point (NODE PATH A,M)

Points can be placed at approximate locations at any place on the screen by simply moving the cursor to the desired location and pressing the **INDICATE** button on the mouse.

To create an approximate point follow these steps:

1. SELECT FKey POINT and submenu /POINTS/.

2. Move the cursor to different locations on the screen and press the INDICATE button on the mouse. Points are created where INDICATED.

4) POINT CREATED HALFWAY BETWEEN TWO EXISTING POINTS:

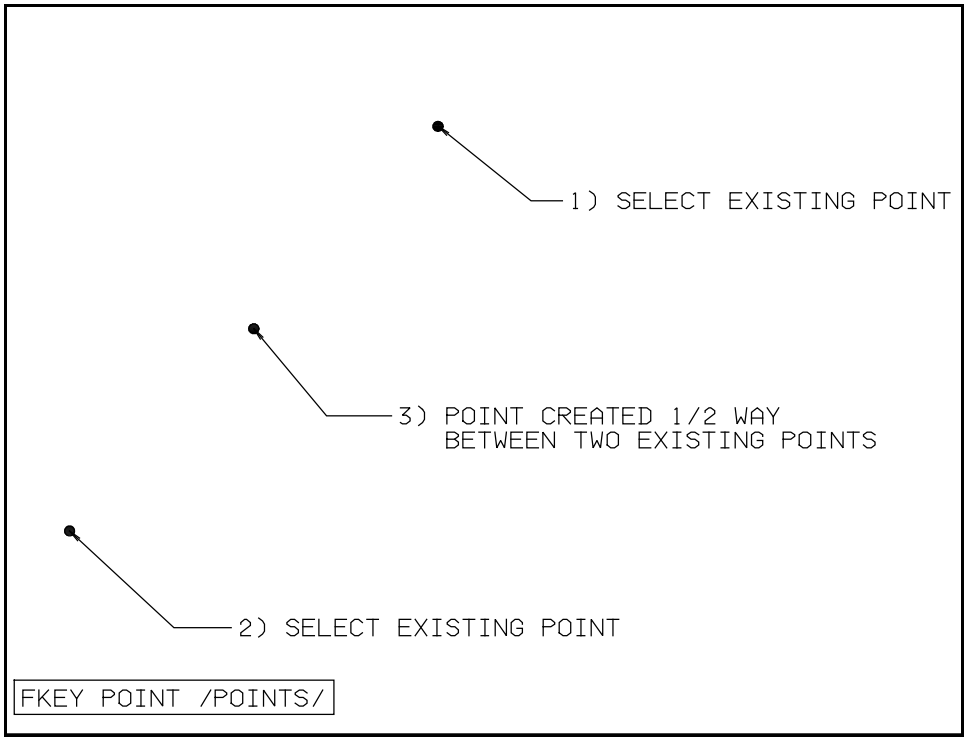

Figure 6 Example for an Point create between other Points (NODE PATH A,C,G)

To create a point halfway between two existing points follow these steps:

1. SELECT FKey POINT and submenu /POINTS/.
2. SELECT an existing point on the screen.
3. SELECT another existing point on the screen.
4. A point is created halfway between the two selected points.

5) POINT PROJECTED ONTO AN ELEMENT:

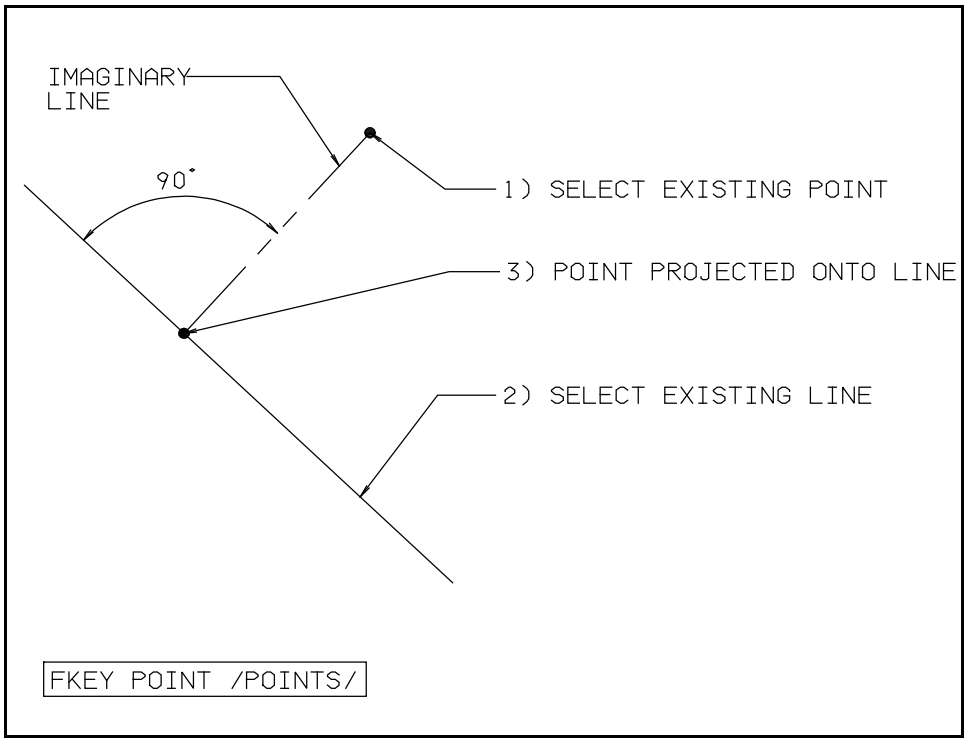

Figure 7 Example for a Point projected onto an element (NODE PATH A,I,J)

Points can be projected onto elements (i.e. lines, circles, splines, etc.) by moving the cursor onto the point and pressing the **SELECT** button and then moving the cursor onto the element and pressing the **SELECT** button one more time. Either the point or the line may be selected first. The point is projected normal to the element.

To project a point onto an element follow these steps:

1. SELECT FKey POINT and submenu /POINTS/.

2. SELECT an existing point on the screen.

3. SELECT another existing element on the screen (line or circle, etc.).

4. The SELECTED point is projected at 90 degrees onto the element.

6) POINT CREATED AT THE INTERSECTION OF TWO ELEMENTS:

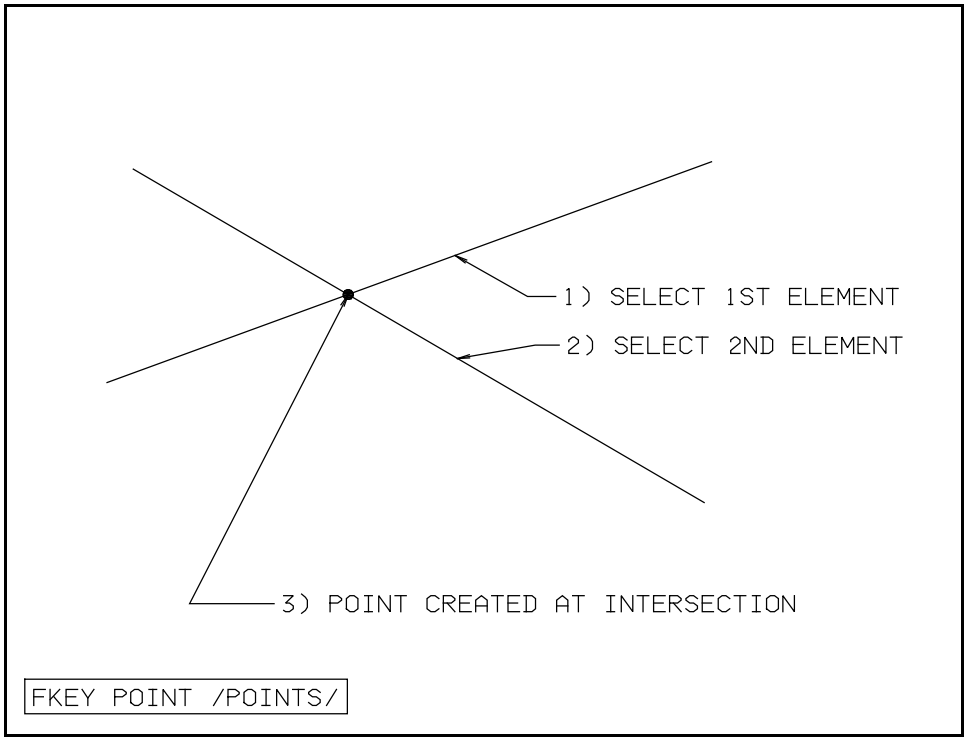

Figure 8 Example for a Point created at the intersection of two elements
(NODE PATH A,I,N)

Points can be created at the intersection of elements. To create a point at the intersection of two elements follow these steps:

1. SELECT FKey POINT and submenu /POINTS/.
2. SELECT the first element (line, circle, spline, etc.)
3. SELECT THE second element (line, circle, spline, etc.)
4. A point is created at the intersection of the two elements.

FKey POINT

SUBMENU / POINTS /

ADVANCED

SECTION

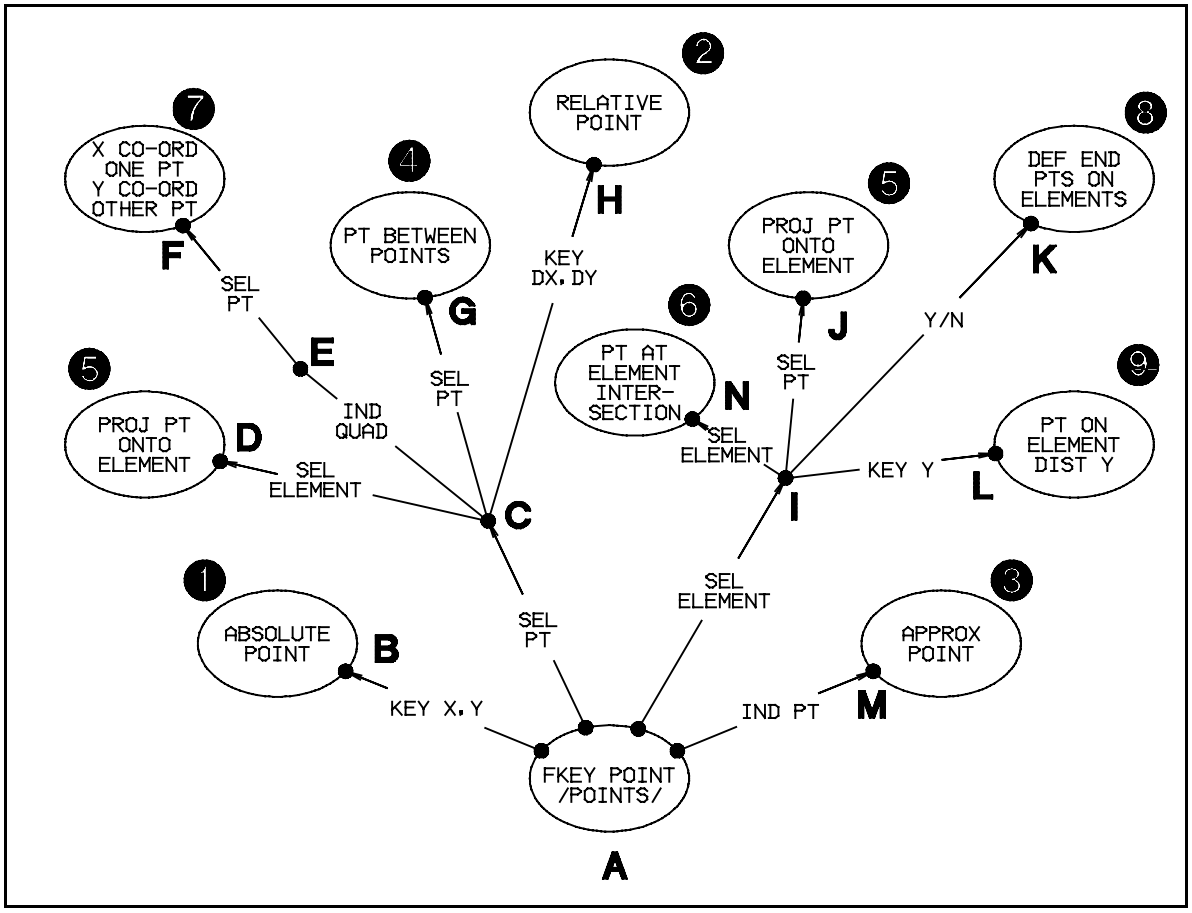

Figure 9 Advanced Road Map for FKey POINT

7) POINT CREATED AT THE CORNER OF TWO EXISTING POINTS:

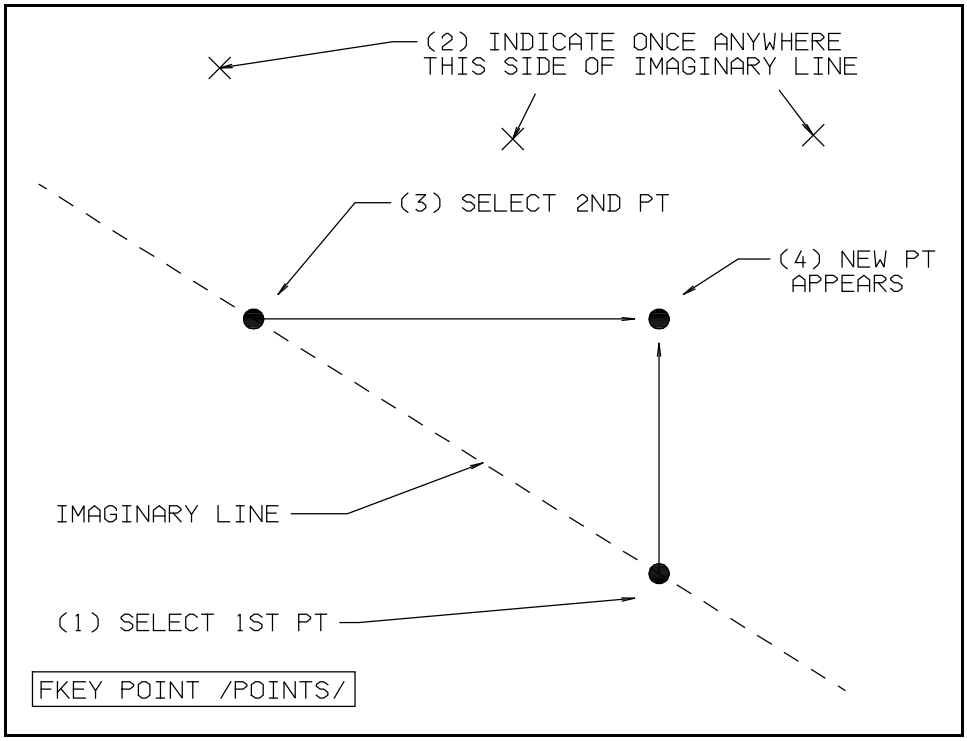

Figure 10 Example for a Point created at the corner of two Points
(NODE PATH A,C,E,F)

To create a point at the corner of two existing points (i.e. take the X co-ordinate of one point and the Y co-ordinate of the other point) follow these steps:

1. SELECT the first existing point on the screen.

2. INDICATE which side you want the point to be created on (i.e. which side of the imaginary line between two existing points)

3. SELECT the second existing point on the screen.

4. A Point is created taking the X co-ordinate of one point and the Y co-ordinate of the other point.

8) POINT DEFINED ON THE END POINTS OF LINES:

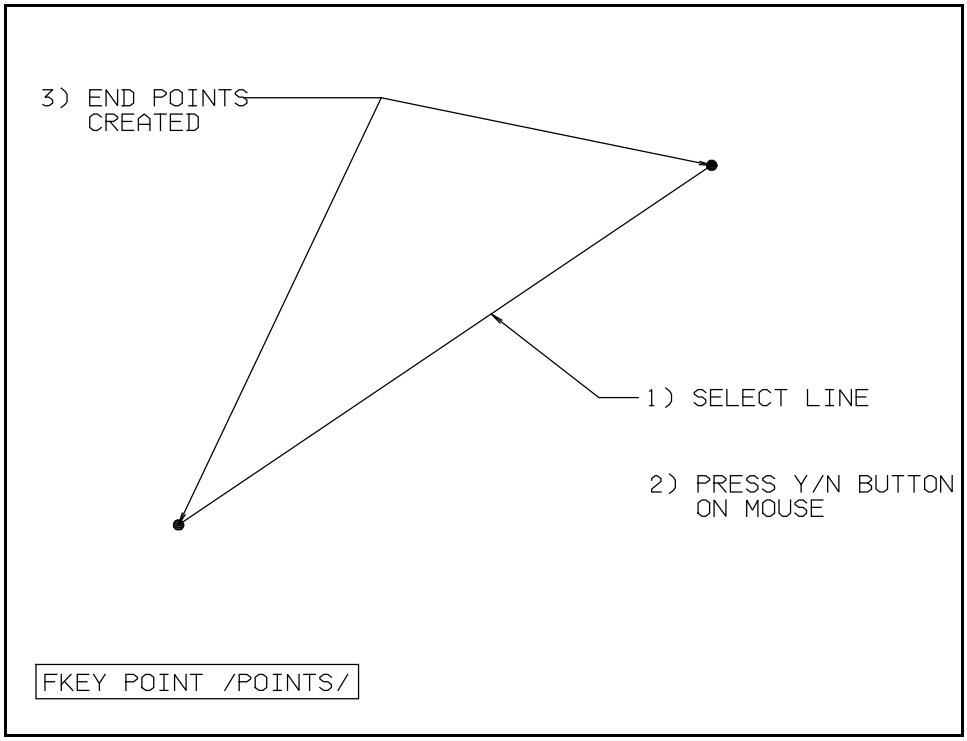

Figure 11 Example for Points created at the end points of lines (NODE PATH A,I,K)

To define the end points on existing lines follow these steps:

1. SELECT an existing line.

2. Press the Y/N button on the mouse.

3. Points are created at either end of the line.

9) POINT CREATED ON ELEMENT AT ELEVATION Y:

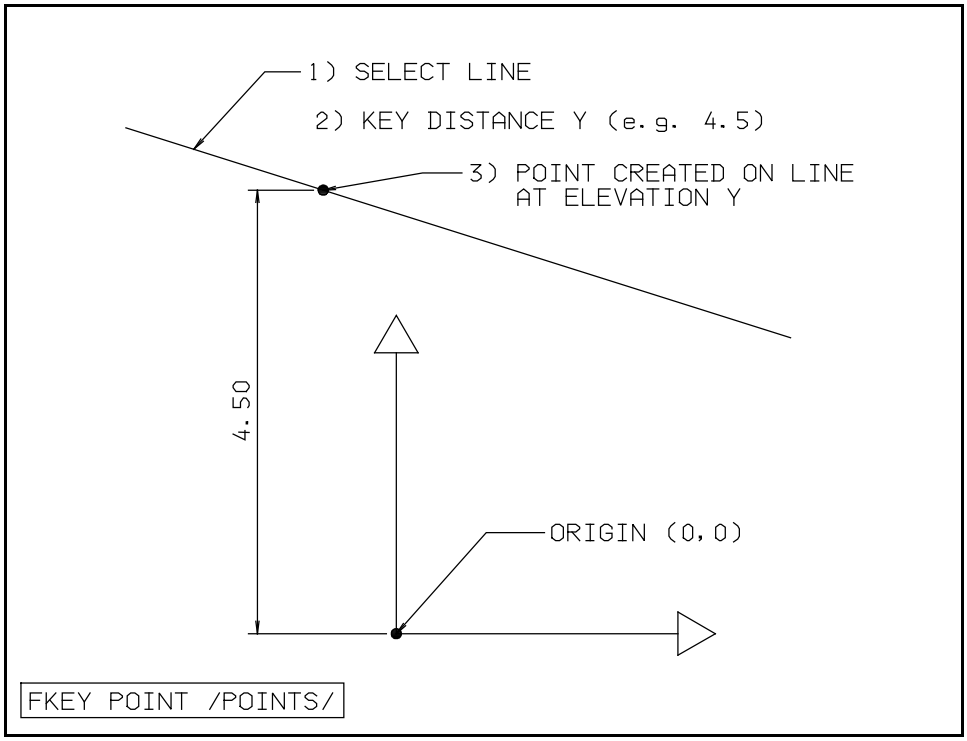

Figure 12 Example for Points created on an element at elevation Y
(NODE PATH A,I,L)

A point can be created on an element at a location where the element is a fixed elevation above the axis.

To create a point on an element at elevation Y follow these steps:

1. SELECT an existing line.

2. KEY the elevation (e.g. 4.5) at which the point will be created.

3. A point is created on the SELECTED line at an elevation Y (4.5).

FKey POINT

SUBMENU / SPACE /

Menu item SPACE allows the spacing of either points of dittos along a single element or a chain of elements.

To space Points along an element make sure that submenu option / PTS / is selected (i.e. underlined).

To space Dittos along an element make sure the submenu option / DETL / is selected (i.e. underlined).

The procedure for placing either points or dittos is the same except that the detail number must be keyed in before proceeding.

Each space has been assigned a Space Number. The same Space Number is also referenced on the Space Road Map and the Action Summary. The different ways to create spaces are divided into beginner and advanced sections and are listed with page numbers as follows:

SUBMENU / SPACE /		
BEGINNER: (See Figure 13,Figure 14 on Page 11-28 for the Beginner Road Maps for Space)		
SPACE NO.	**DESCRIPTION**	**PAGE NO.**
1	To create points equally spaced along entire element length	11-29
2	To create dittos equally spaced along entire element length	11-30
ADVANCED: (See Figure 17,Figure 18 on Page 11-32 for the Advanced Road Maps for Space)		
SPACE NO.	**DESCRIPTION**	**PAGE NO.**
3	To create points equally spaced along entire element chain length	11-33
4	To create dittos equally spaced along entire element chain length	11-35
5	To create points equally spaced along an element length between two points on the element	11-37
6	To create points generated along an element at a fixed true length	11-38
7	To create points generated along an element at spaces less than or equal to a keyed length.	11-39

All menus in Micro CADAM are intelligent. They anticipate your actions wherever possible. The results depend on the sequence that the **SELECT, INDICATE, KEY** and **Y/N** keys are pressed. This is summarized for FKey / POINT / SPACE / and shown in chart form below:

FKEY POINT / SPACE / ACTION SUMMARY

SPACE NO.	TO CREATE	1ST ACTION	2ND ACTION	3RD ACTION	4TH ACTION	5TH ACTION	6TH ACTION	NODE PATH
BEGINNER SECTION								
1	To create points equally spaced along entire element length	SEL Element	KEY No Spaces	Y/N Unlimited				A,B,C, D
2	To create dittos equally spaced along entire element length	KEY Detail No.	SEL Element	KEY No Spaces	Y/N Unlimited			A,P,B, C,D
ADVANCED SECTION								
3	To create points equally spaced along entire element chain length	SEL 1st Element	KEY No Spaces	SEL One End Pt	SEL Remaining Elements	SEL Other End Pt		A,B,C, E,L,M, N,O
4	To create dittos equally spaced along entire element chain	KEY Detail No	SEL 1st Element	KEY No Spaces	SEL One End Pt	SEL Remaining Elements	SEL Other End Pt	A,P,B, C,E,L, M,N,O
5	To create points equally spaced along an element length between two points on the element	SEL Element	KEY No Spaces	SEL 1st End Pt	SEL 2nd End Pt			A,B,C, E,F
6	To create points generated along an element at a fixed true length	SEL Element	KEY No Spaces	SEL End Pt	KEY True Length	IND Direction		A,B,C, E,G,H
7	To create points generated along an element at spaces less than or equal to a keyed length	SEL Element	SEL One End Pt	SEL Other End Pt	KEY Maximum Length			A,B,I,J ,K

FKey POINT

SUBMENU / SPACE /

BEGINNER

SECTION

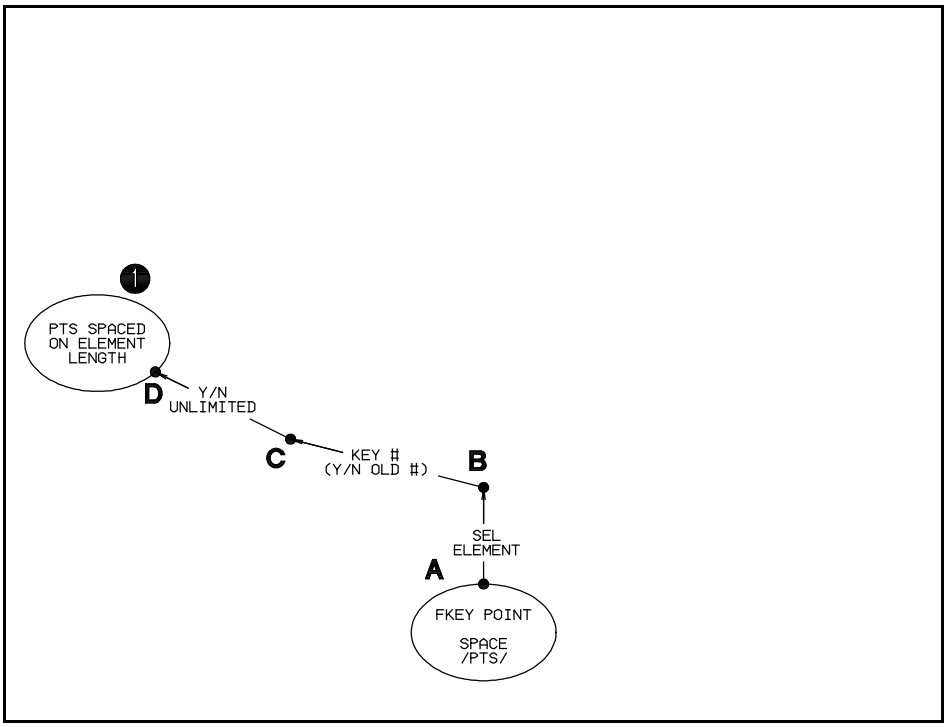

Figure 13 Beginner Road Map for FKey POINT / SPACE /)

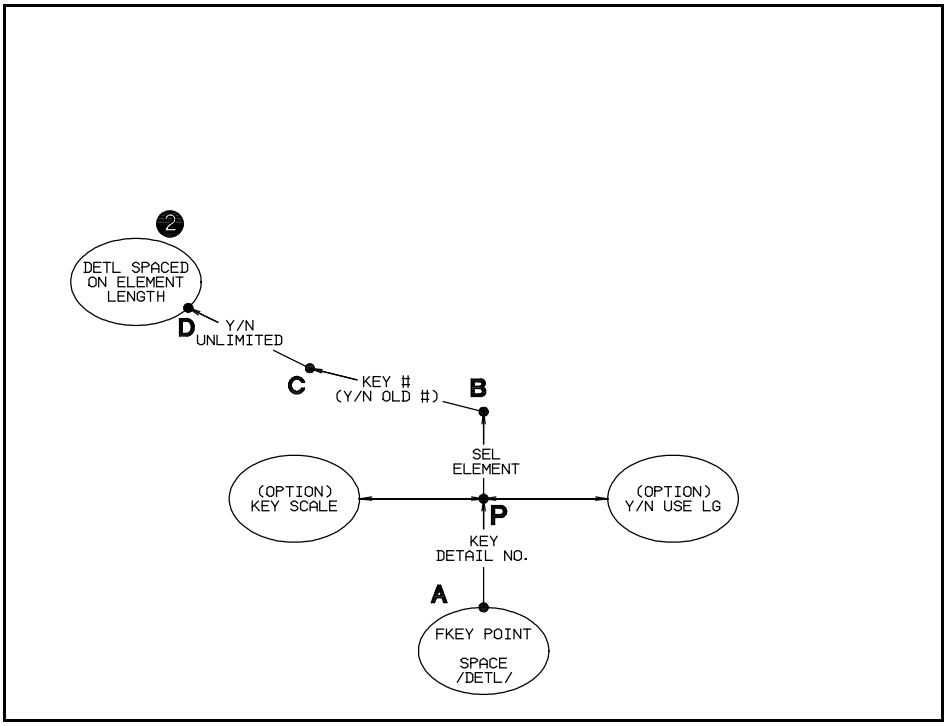

Figure 14 Beginner Road Map for FKey POINT / SPACE / // DETL /

1) TO CREATE POINTS EQUALLY SPACED ALONG THE ENTIRE ELEMENT LENGTH:

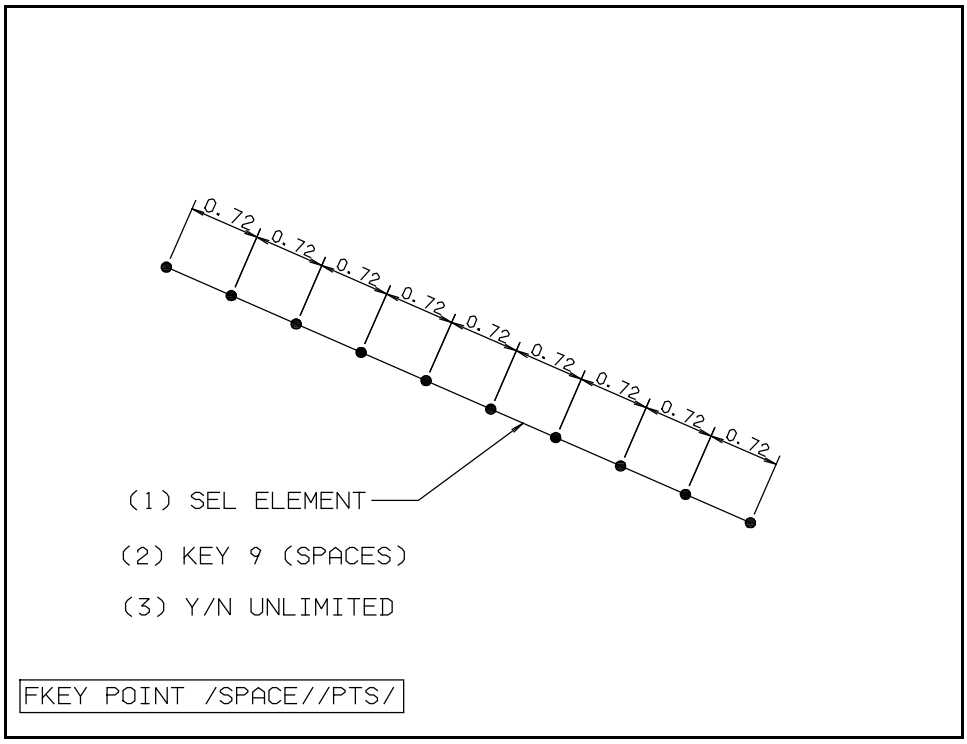

Figure 15 Example for an Points equally spaced on element (NODE PATH A,B,C,D)

Points can be keyed in at absolute co-ordinates. To create an absolute point follow these steps:

1. SELECT an existing element you want the points spaced along.

2. KEY the number of spaces required (or press the Y/N button on the mouse to accept the number of spaces displayed)

3. Press the Y/N button on the mouse to space points unlimited (i.e. from one end of the element to the other. The points are created.

2) TO CREATE DITTOS EQUALLY SPACED ALONG ENTIRE ELEMENT LENGTH:

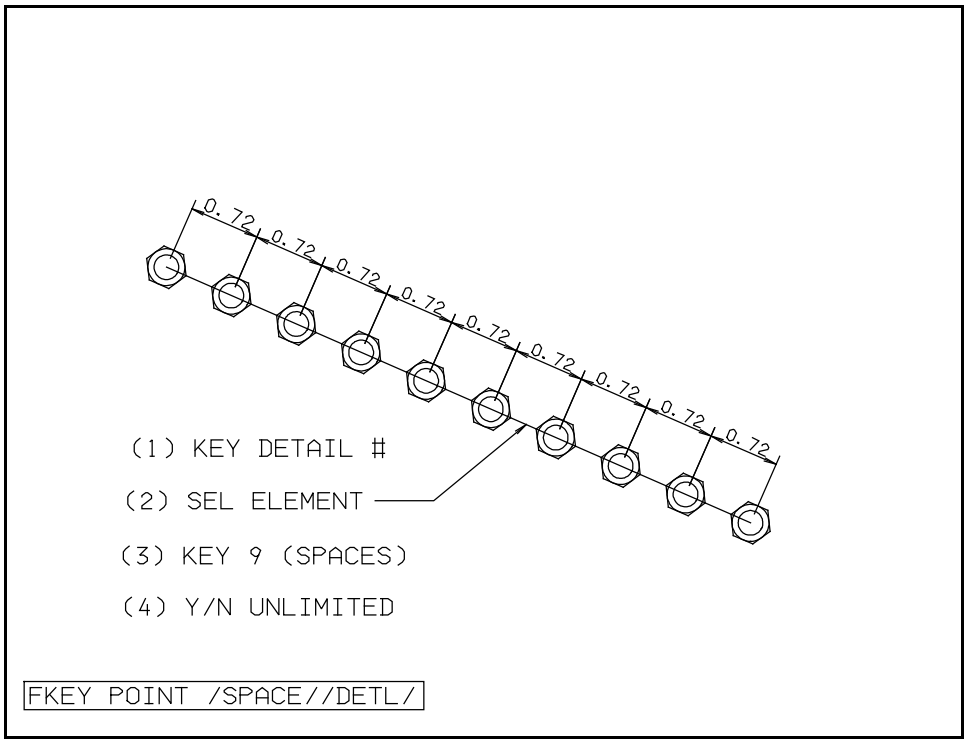

Figure 16 Example for Dittos equally spaced along entire element length
(NODE PATH A,P,B,C,D)

Points can be placed relative to another point. To create a relative point follow these steps:

1. KEY the detail number. This is the number of the detail page that holds the ditto that will be spaced along the element. In the example shown above the original geometry for the hex nut is present in detail page 1, which is the number of the detail page keyed in.

2. SELECT an existing element you want the dittos spaced along.

3. KEY the number of spaces required (or press the Y/N button on the mouse to accept the number of spaces displayed)

4. Press the Y/N button on the mouse to space dittos unlimited (i.e. from one end of the element to the other. The dittos are created.

FKey POINT

SUBMENU / SPACE /

ADVANCED

SECTION

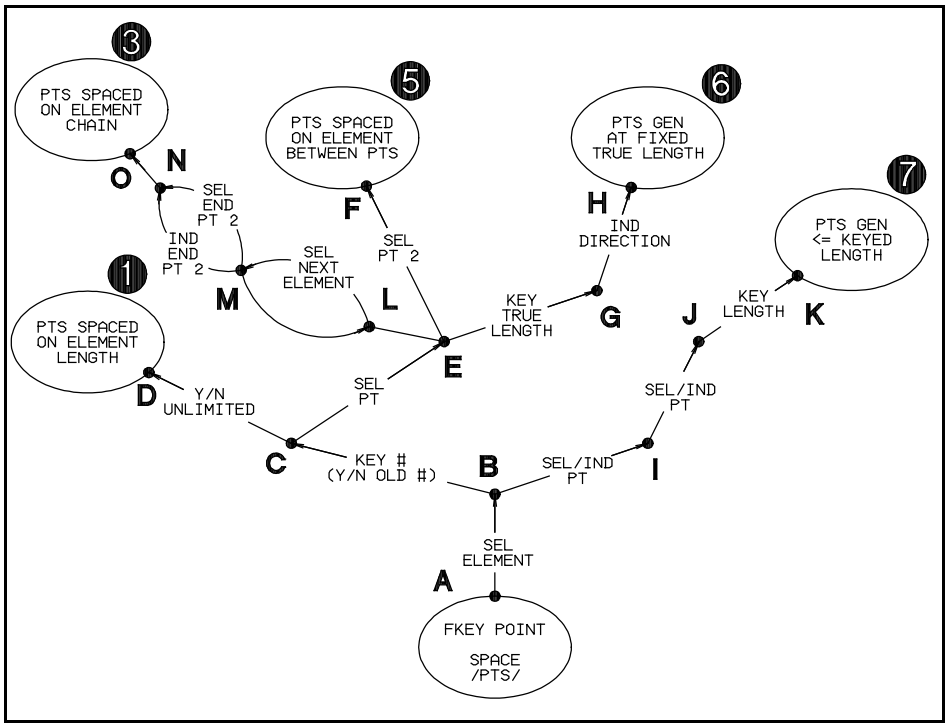

Figure 17 Advanced Road Map for FKey POINT /SPACE/ /PTS/

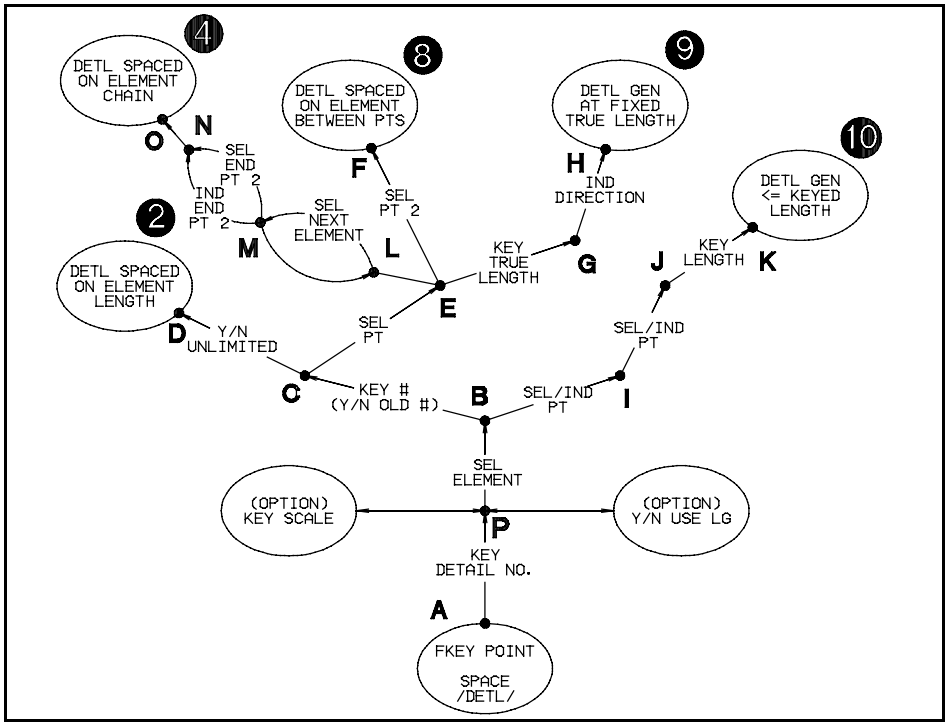

Figure 18 Advanced Road Map for FKey POINT /SPACE/ /DETL/

3) TO CREATE POINTS EQUALLY SPACED ALONG ENTIRE ELEMENT CHAIN:

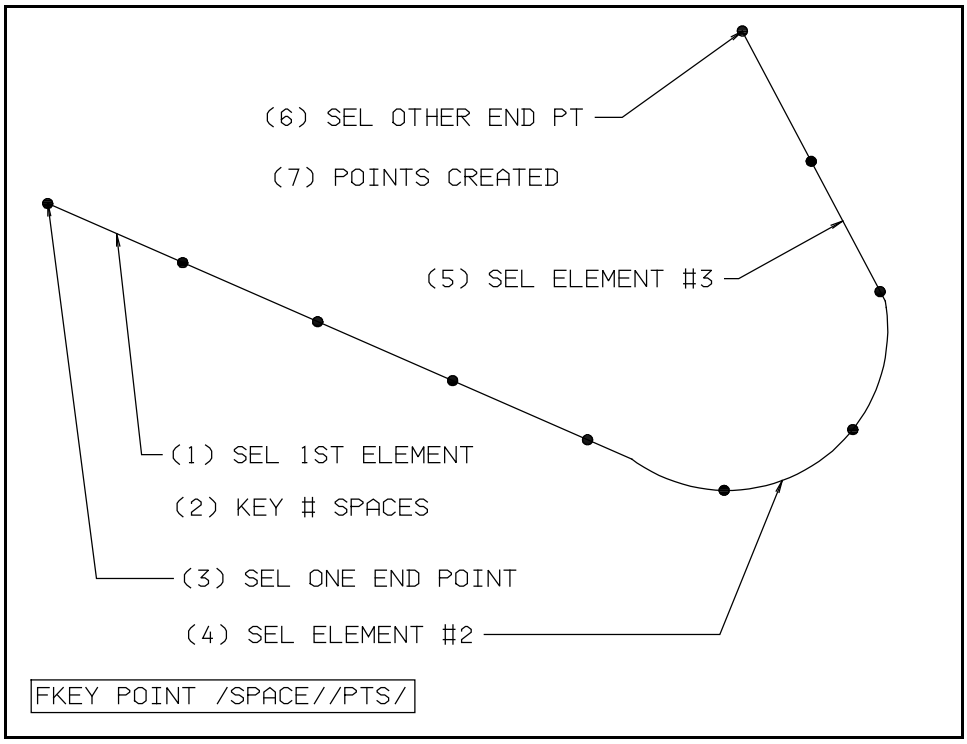

Figure 19 Example for a Point equally spaced along entire element chain
(NODE PATH A,B,C,E,L,M,N,O)

To create points equally spaced along the entire element chain follow these steps:

1. SELECT the first element on the screen.

2. KEY the number of spaces required (or press the Y/N button on the mouse to accept any number displayed at the top of the screen).

3. SELECT the first end point. The points will be spaced from this first end point, along the chain to the second end point.

4. SELECT element number two.

5. SELECT element number three (continue SELECTING elements along the chain until finished).

6. SELECT the second end point. (Points will be spaced between the first and second end point along the chain).

7. Points are created, spaced along the chain of elements between the first end point and the second end point.

4) TO CREATE DITTOS EQUALLY SPACED ALONG ENTIRE ELEMENT CHAIN:

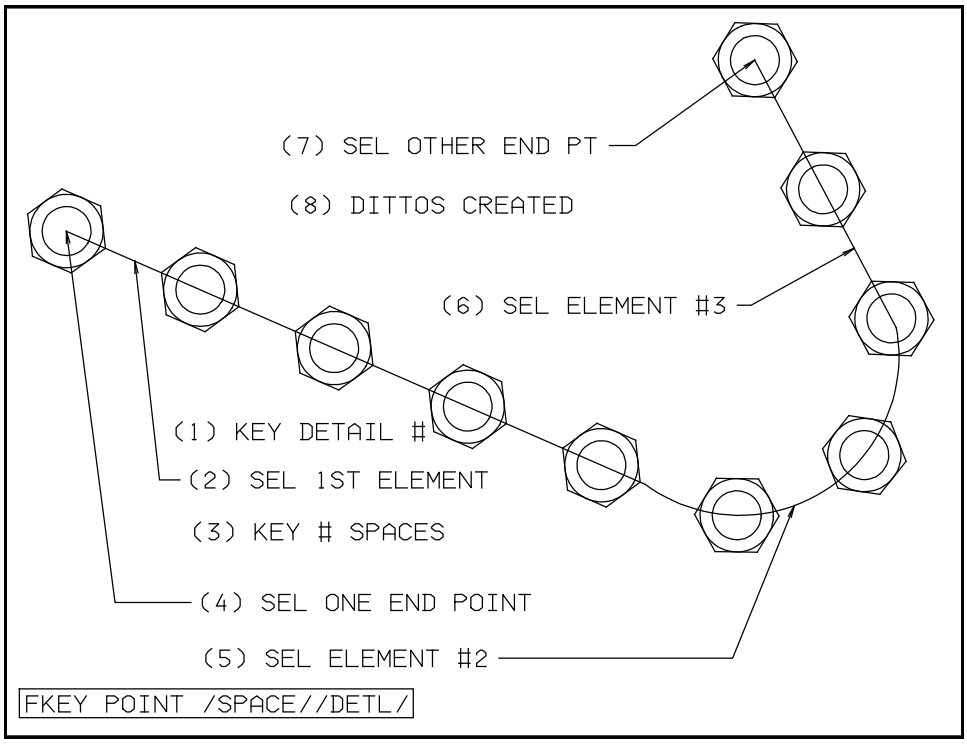

Figure 20 Example for Dittos equally spaced along entire element chain.
(NODE PATH A,P,B,C,E,L,M,N,O)

To create dittos equally spaced along an entire element chain follow these steps:

1. KEY the detail number. This is the number of the detail page that holds the ditto that will be spaced along the element.

2. SELECT the first element on the screen.

3. KEY the number of spaces required (or press the Y/N button on the mouse to accept any number displayed at the top of the screen).

4. SELECT the first end point. The dittos will be spaced from this first end point, along the chain to the second end point.

5. SELECT element number two.

6. SELECT element number three (continue SELECTING elements along the chain until finished).

7. SELECT the second end point. (Dittos will be spaced between the first and second end point along the chain).

8. Dittos are created, spaced along the chain of elements between the first end point and the second end point.

5) TO CREATE POINTS EQUALLY SPACED ALONG AN ELEMENT LENGTH BETWEEN TWO POINTS ON THE ELEMENT:

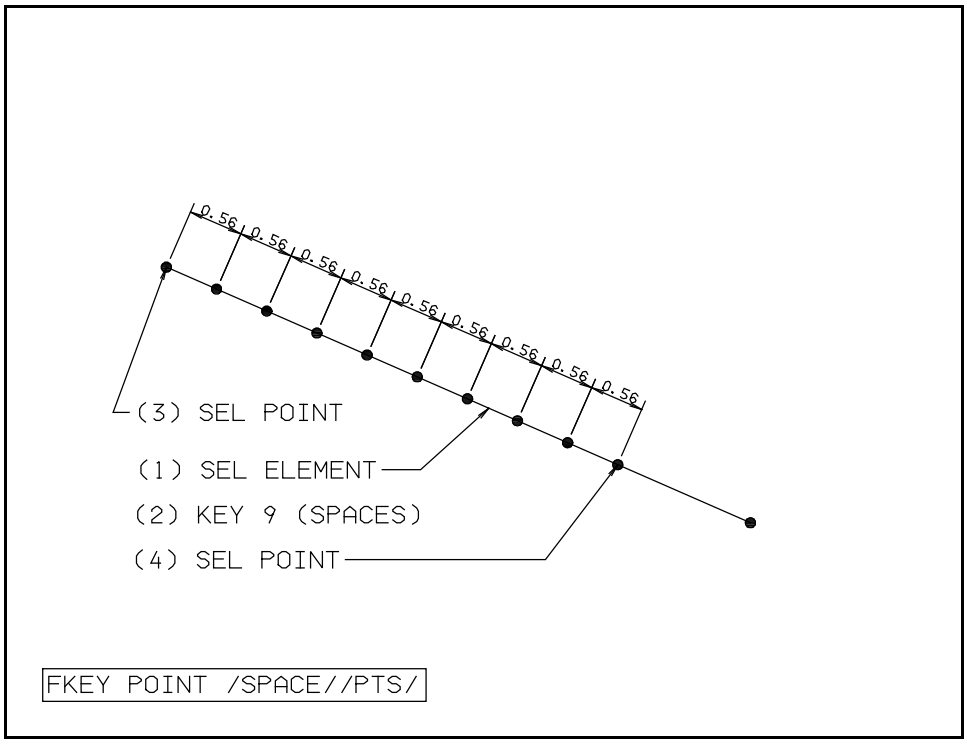

Figure 21 Example for Points equally spaced along an element length between two points on the element. (NODE PATH A,B,C,E,F)

To create points equally spaced along an element length between two points on the element follow these steps:

1. SELECT the element on which the points will be spaced.

2. KEY the number of spaces required (or press the Y/N button on the mouse to accept any number displayed at the top of the screen).

3. SELECT one end point on the element.

4. SELECT the other end point on the element. The points are now equally spaced along the element between the two end points.

6) TO CREATE POINTS GENERATED ALONG AN ELEMENT AT A FIXED TRUE LENGTH:

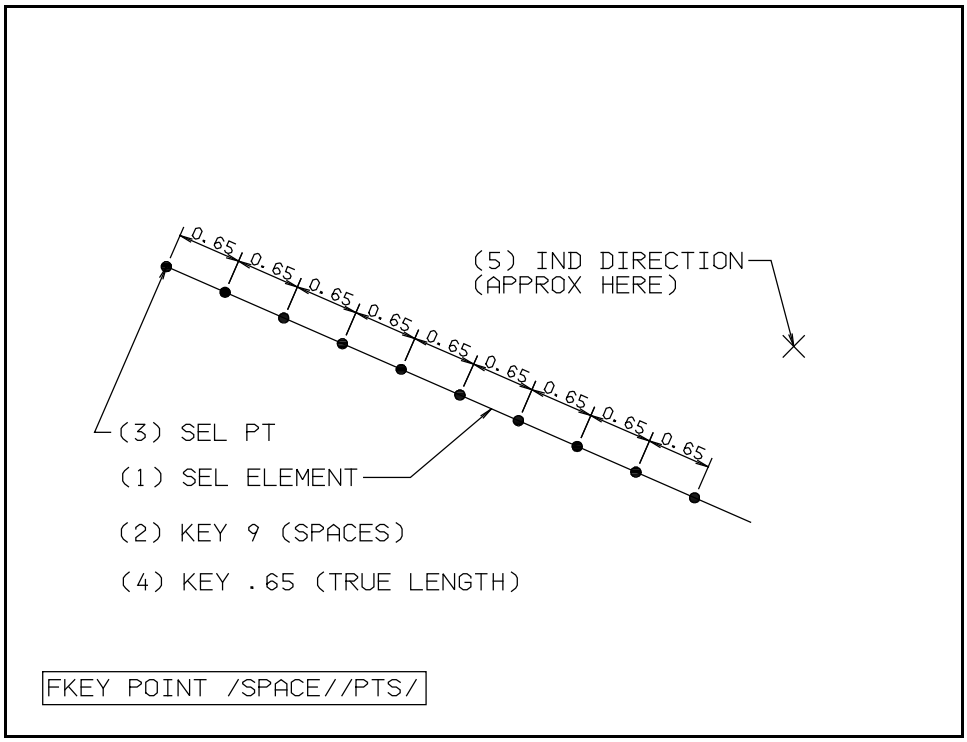

Figure 22 Example for Points generated along an element or chain of elements at a fixed true length. (NODE PATH A,B,C,E,G,H)

To create points equally spaced along an element at a fixed true length follow these steps:

1. SELECT the element on the screen along which the points will be spaced.

2. KEY the number of spaces required (or press the Y/N button on the mouse to accept any number displayed at the top of the screen).

3. SELECT the starting end point.

4. KEY the true length (this is the spacing distance that will be maintained).

5. INDICATE an approximate direction. The points will be spaced from the starting end point, along the element in the direction indicated. All spaces will be the keyed true length.

7) TO CREATE POINTS GENERATED ALONG AN ELEMENT AT SPACES LESS THAN OR EQUAL TO A KEYED LENGTH:

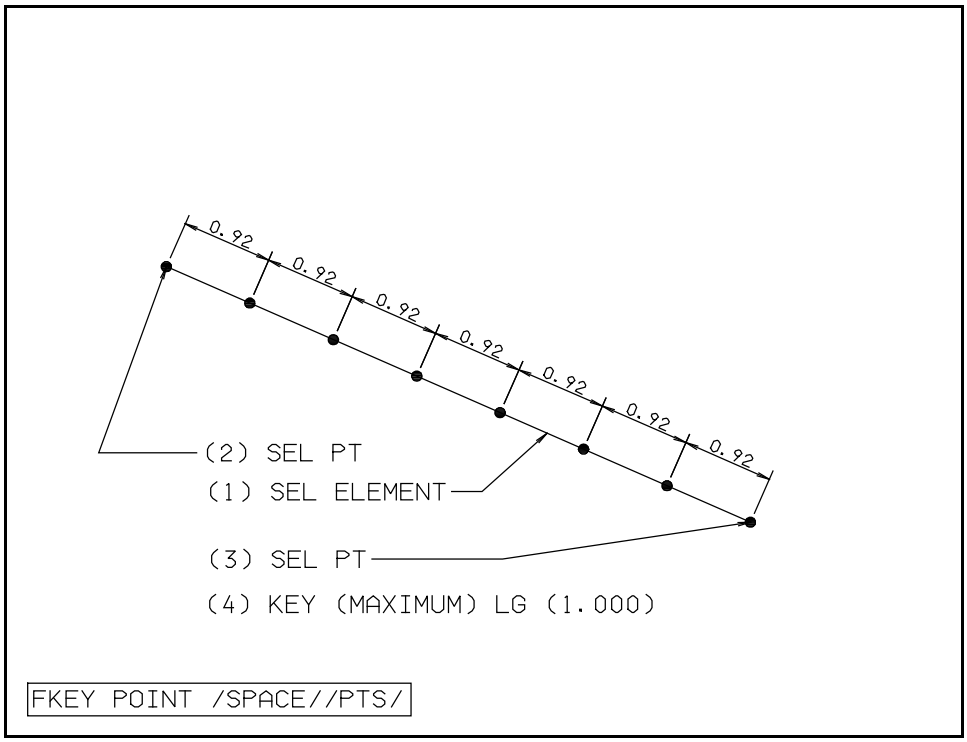

Figure 23 Example for Points generated along an element or chain of elements at spaces less than or equal to a keyed length. (NODE PATH A,B,I,J,K)

To create points generated along an element at spaces less than or equal to a keyed length follow these steps:

1. SELECT the element along which the points will be spaced.

2. SELECT the first end point on the element.

3. SELECT the second end point on the element.

4. KEY the maximum length of each space. Points will now be created along the element between the first end point and the second end point with spaces that are as large as possible but do not exceed the maximum length.

FKey POINT

SUBMENU / DEF PTS /

The definition points for each and every element (i.e. every line, circle, spline, note, etc.) are known to the system. Sometimes these definition points have been erased from the screen display and are not present. To turn them on again **SELECT** submenu item DEF PTS and then select the element whose definition points you want to see. A list of definition points displayed for elements is showed below:

Each DEF PTS item has been assigned a DEF PTS Number. The same DEF PTS Number is also referenced on the Point Road Map and the Action Summary. The different ways to create points are all covered in the beginner section and are listed with page numbers as follows:

SUBMENU / DEF PTS /		
BEGINNER: (See Figure 24 on Page 46 for the Beginner Road Map for DEF PTS)		
DEF PTS NO.	**DESCRIPTION**	**PAGE NO.**
1	Define Points on line	11-47
	Define Points on Circle	
	Define Points on Spline	
	Define Points on Arc	
	Define Points on Symbol	
	Define Points on Ditto	
	Define Points on Note	
	Define Points on Dimension	

All menus in Micro CADAM are intelligent. They anticipate your actions wherever possible. The results depend on the sequence that the **SELECT, INDICATE, KEY** and **Y/N** keys are pressed. This is summarized for FKey / POINT / POINTS / and is shown in chart form below:

FKEY / POINT / DEF PTS / ACTION SUMMARY

DEF PTS NO.	TO CREATE	1ST ACTION	2ND ACTION	3RD ACTION	NODEPATH
BEGINNER SECTION					
1	DEF PTS on Line	SEL Line			A,B
	DEF PTS on Circle	SEL Circle			
	DEF PTS on Spline	IND Spline			
	DEF PTS on Arc	SEL Arc			
	DEF PTS on Symbol	SEL Symbol			
	DEF PTS on Ditto	SEL Ditto			
	DEF PTS on Note	SEL Note			
	DEF PTS on Dimension	SEL Dimension			

FKey POINT

SUBMENU / DEF PTS /

BEGINNER

SECTION

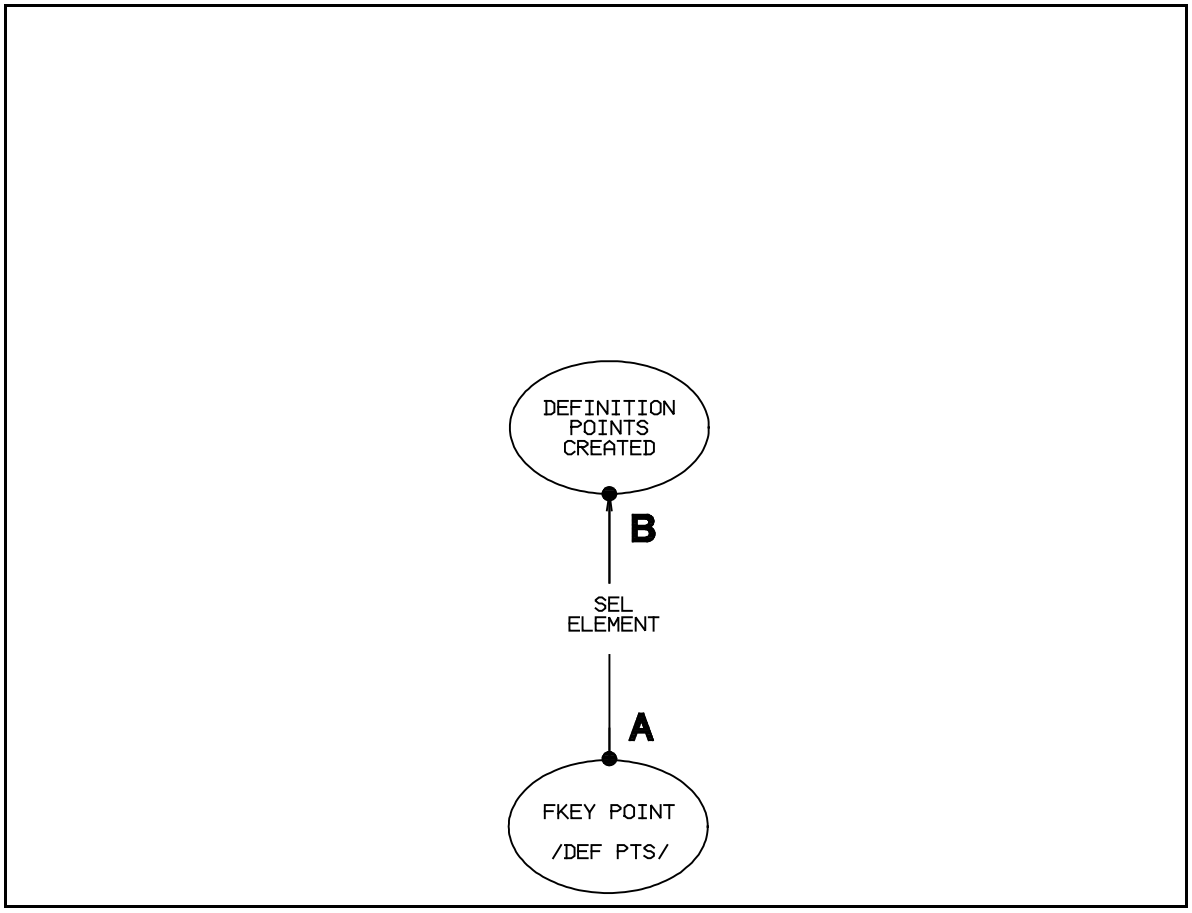

Figure 24 Beginner Road Map for DEF PTS (DEFPTMAP.PLT)

1) DEF PTS:

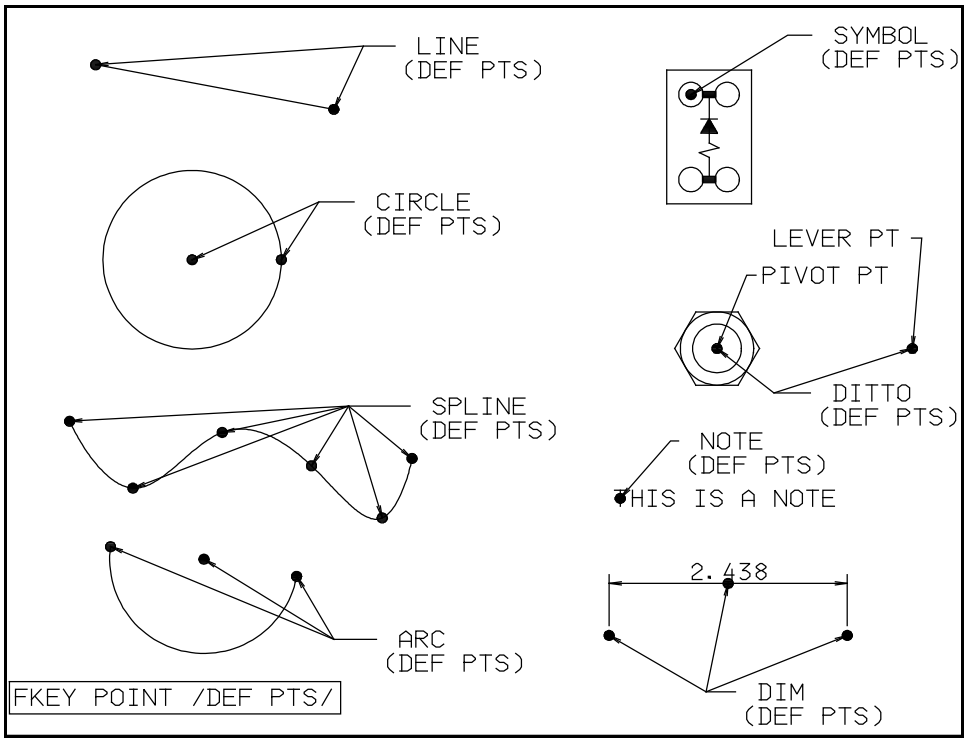

Figure 25 Example of Define Points (NODE PATH A,B)

Points can be defined on existing elements. To define points follow these steps:

1. SELECT the element on the screen. It's definition points are displayed.

FKey POINT

SUBMENU / GRID /

Grid points are special points that are displayed at fixed intervals on the screen. Each grid has an origin point as its starting reference point. This starting reference point is useful for two reasons:

- A grid that has been erased can be reconstructed as long as the starting reference point and the grid spacing is known.

- The grid can be lined up and started at any convenient point so that all grid points originate from the starting reference point.

Grid points can used at either constant spacing or variable spacing.

At constant spacing the grid points can have a single entry for both the X and Y spacing (i.e. constant XY spacing) or they can have a separate entry for the X and the Y spacing (i.e. constant X,Y spacing).

At variable spacing the grid points have a separate entry for the X spacing (up to 20 separate spaces ... X1,X2,X3...X20) and a separate entry for Y spacing (up to 20 spaces ... Y1,Y2,Y3...Y20).

There are four submenu Modifier and submenu Options available:

1. **NORMAL / LOCKON :**

   When the submenu Modifier **NORMAL** is underlined the grid points must be SELECTED when they are referenced. Any positions or locations that are indicated will not automatically 'lock on' to the grid points.

   When the submenu Modifier **LOCKON** is underlined the grid points can be either SELECTED or INDICATED. Any positions or locations that are indicated will automatically 'lock on' to the grid points.

2. **SHO / NOSHO :**

   The SHO / NOSHO submenu Option affects the display of the grid points. When **SHO** is underlined all grid points are displayed. When submenu Modifier **NOSHO** is underlined the grid points are not displayed. Because they are not displayed, they cannot be selected. If submenu Modifier **LOCKON** is also underlined when the submenu Modifier **NOSHO** is underlined, then any positions or locations that are indicated will still automatically 'lock on' to the NOSHO grid points.

3. **ANAL :**

The ANAL submenu Option allows you to analyze an existing grid for:

- The origin point
- The X spacing
- The Y spacing

4. **ERASE :**

The ERASE submenu Option allows you to erase the grid.

Each GRID item has been assigned a GRID Number. The same GRID Number is also referenced on the Grid Road Map and the Action Summary. The three different ways to create grids are covered in the advanced section and are listed with page numbers as follows:

SUBMENU / GRID /		
ADVANCED: (See Figure 26 on Page 54 for the Advanced Road Map for GRID)		
GRID NO.	**DESCRIPTION**	**PAGE NO.**
1	Grid created at Constant XY Spacing (i.e. X and Y are the same)	11-55
2	Grid created at Constant X,Y Spacing (i.e. X and Y can be different)	11-56
3	Grid created at Variable Spacing (i.e. X steps are X1,X2...X20 and Y steps are Y1,Y2...Y20)	11-57

All menus in Micro CADAM are intelligent. They anticipate your actions wherever possible. The results depend on the sequence that the **SELECT, INDICATE, KEY** and **Y/N** keys are pressed. This is summarized for FKey / POINT / GRID / and is shown in chart form below:

FKEY / POINT / GRID / ACTION SUMMARY

GRID NO.	TO CREATE	1ST ACTION	2ND ACTION	3RD ACTION	4TH ACTION	5TH ACTION	NODEPATH
ADVANCED SECTION							
1	Grid created at Constant XY Spacing (i.e. X and Y are the same)	SEL/IND/KEY Origin Point	KEY Constant XY Spacing	SEL/IND Display Corner Point	SEL/IND Opposite Corner Point		A,B,C,D,E,F, G,H
2	Grid created at Constant X,Y Spacing (i.e. X and Y can be different)	SEL/IND/KEY Origin Point	KEY Constant X,Y Spacing	SEL/IND Display Corner Point	SEL/IND Opposite Corner Point		A,B,C,D,E,F, G,H
3	Grid created at Variable Spacing (i.e. X and Y can each have up to 20 different steps)	SEL/IND/KEY Origin Point	KEY Variable Grid X Steps (X1,X2...X20)	KEY Variable Grid Y Steps (Y1,Y2...Y20)	SEL/IND Display Corner Point	SEL/IND Opposite Corner Point	A,B,C,I,J,K,D ,E,F,G,H

FKey POINT

SUBMENU / GRID /

ADVANCED

SECTION

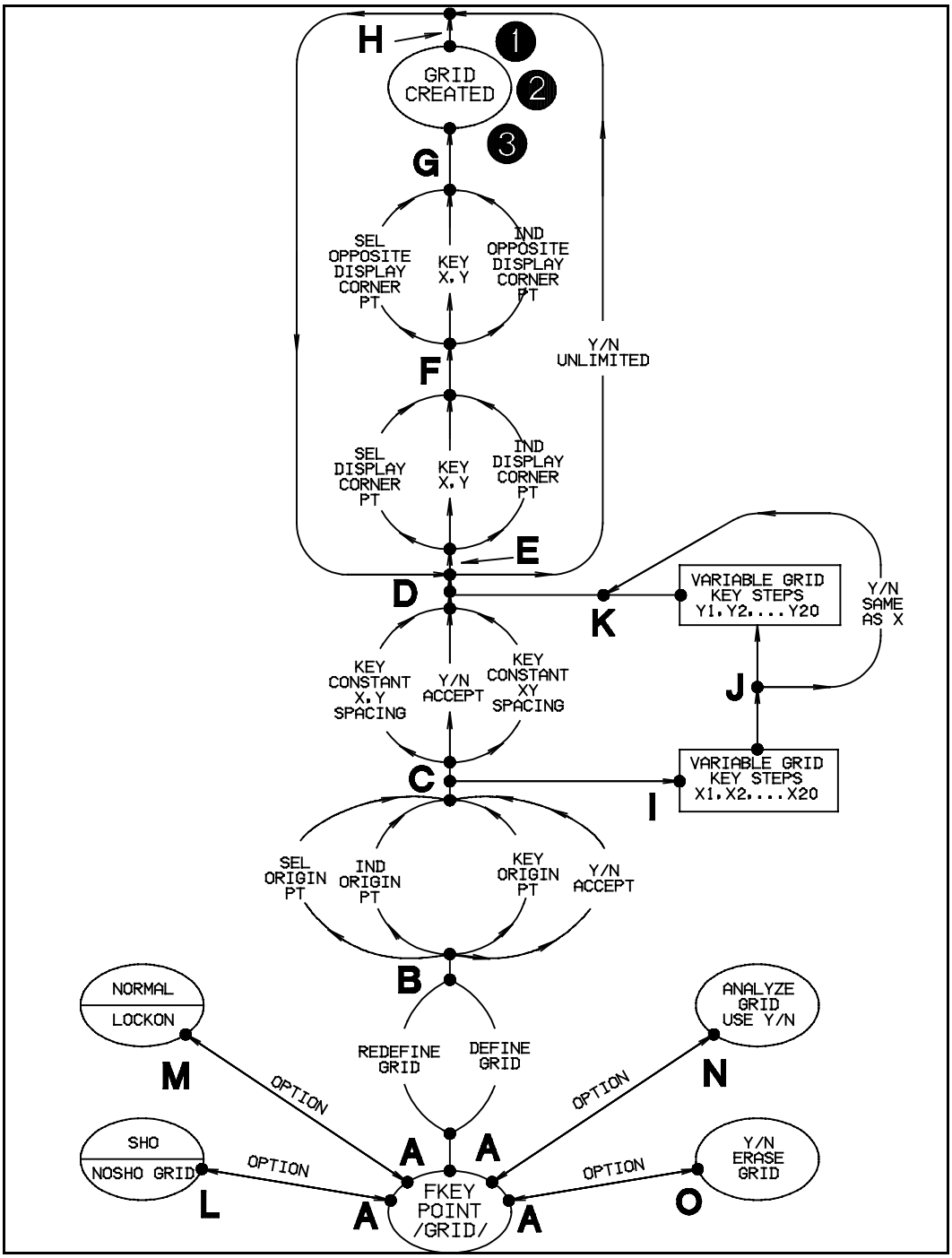

Figure 26 Beginner Road Map for GRID (GRIDMAP.PLT)

1) GRID CREATED AT CONSTANT XY SPACING (i.e. a single entry since X and Y are the same):

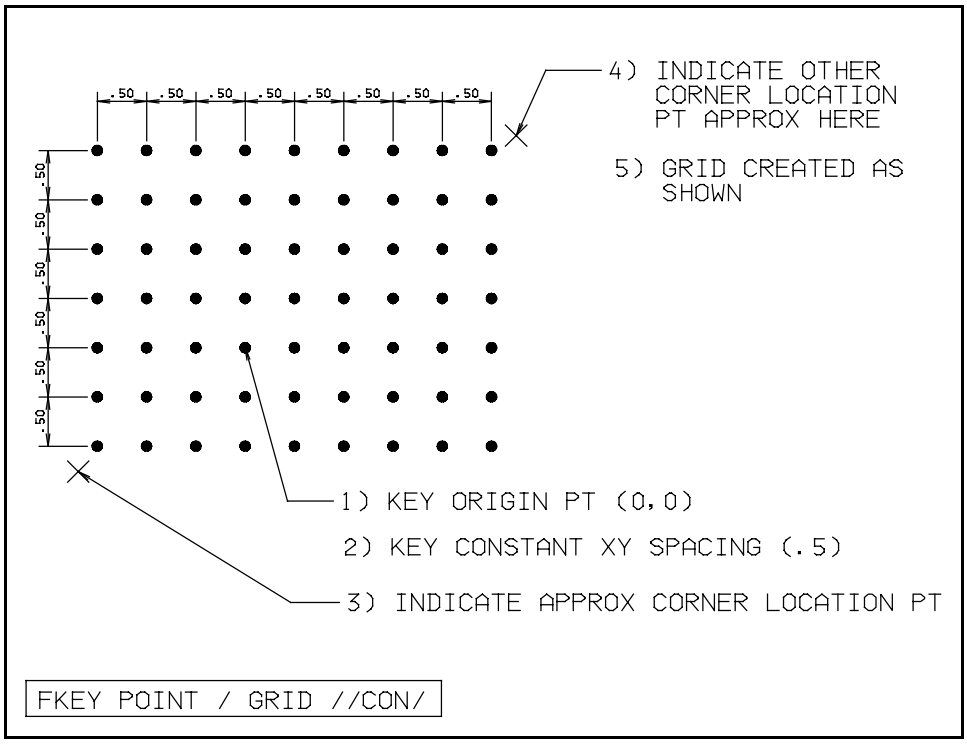

Figure 27 Example of Constant Grid Points with same XY value
(NODE PATH A,B,C,D,E,F,G,H)

To create a grid at constant XY spacing follow these steps:

1. SELECT FKey POINT and submenu /GRID/.

2. KEY the origin point (0,0). (Note that the origin point can also be SELECTED or INDICATED)

3. KEY the XY spacing (.5)

4. INDICATE one approximate corner point.

5. INDICATE the other approximate corner point.

6. The grid is created.

2) GRID CREATED AT CONSTANT X,Y SPACING (i.e. one entry for X and one entry for Y since they are different):

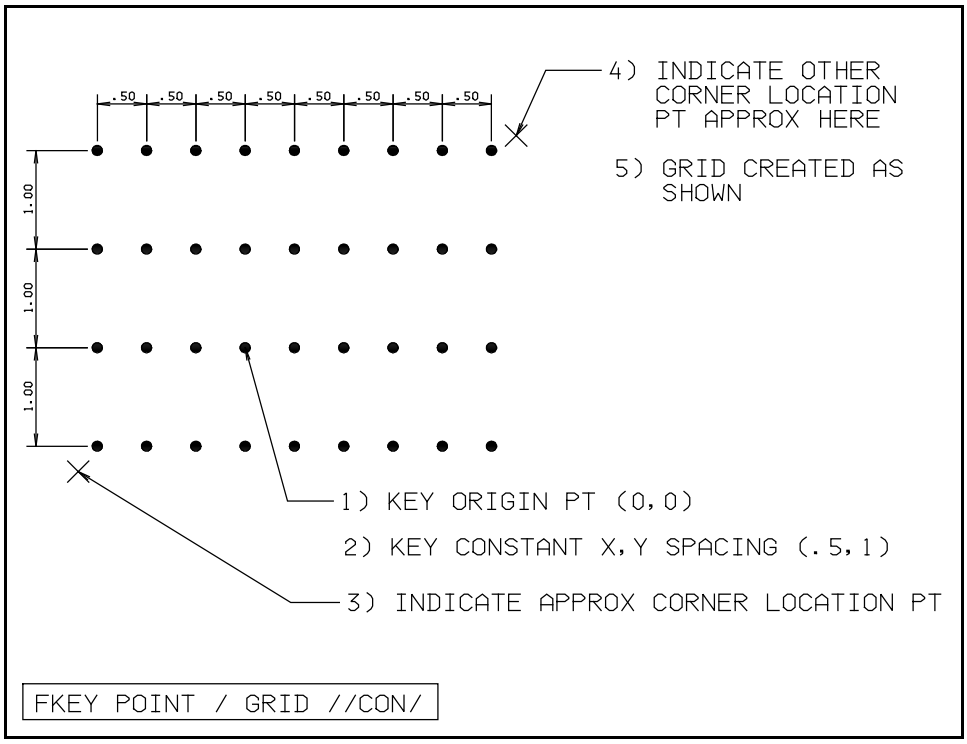

Figure 28 Example of Constant Grid Points with separate X & Y entry
(NODE PATH A,B,C,D,E,F,G,H)

To create a grid at constant X,Y spacing follow these steps:

1. SELECT FKey POINT and submenu /GRID/.

2. KEY the origin point (0,0). (The origin point can also be SELECTED or INDICATED)

3. KEY the X,Y spacing (.5,1)

4. INDICATE one approximate corner point.

5. INDICATE the other approximate corner point.

6. The grid is created.

3) GRID CREATED AT VARIABLE X and Y SPACING (i.e. X steps are X1,X2,X3...X20 and Y steps are Y1,Y2,Y3...Y20):

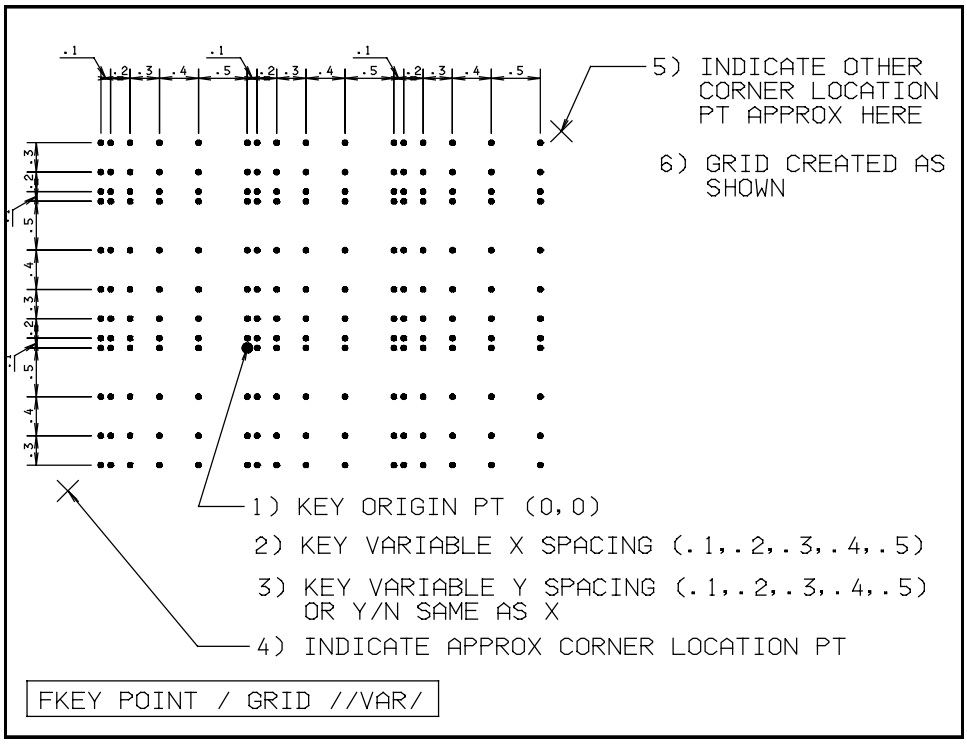

Figure 29 Example of Variable Spacing Grid Points
(NODE PATH A,B,C,I,J,K,D,E,F,G,H)

To create a grid at Variable X and Y spacing follow these steps:

1. SELECT FKey POINT and submenu /GRID/.

2. KEY the origin point (0,0). (The origin point can also be SELECTED or INDICATED)

3. KEY the variable X spacing (.1,.2,.3,.4,.5) (NOTE: Up to 20 separate X spacings can be keyed)

4. KEY the variable Y spacing (.1,.2,.3,.4,.5) (NOTE: Up to 20 separate Y spacings can be keyed)

5. INDICATE one approximate corner point.

6. INDICATE the other approximate corner point.

7. The grid is created.

CHAPTER 12

FKey LINE

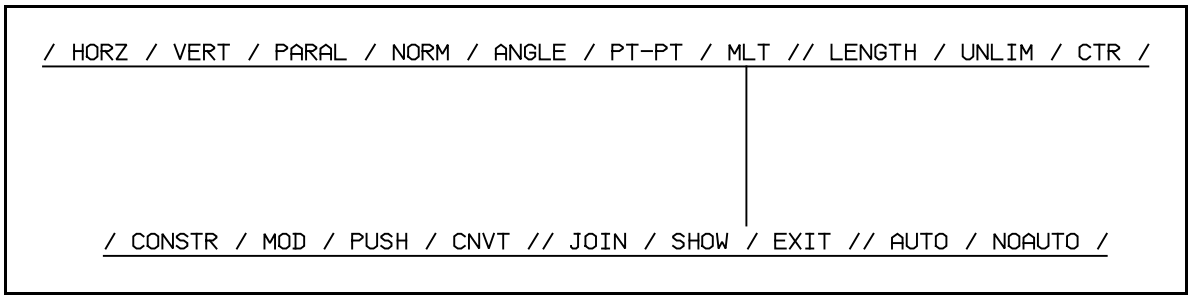

Figure 1 - Menu Item Tree for FKey LINE

FKey LINE enables you to draw all types of lines. The different types that can be drawn are:

- Horizontal unlimited length (i.e. 20,000 units long)
- Horizontal fixed length
- Horizontal centre lines
- Vertical unlimited length
- Vertical fixed length
- Vertical centre lines
- Parallel unlimited length
- Parallel fixed length
- Parallel centre lines
- Normal unlimited length
- Normal fixed length
- Normal centre lines
- Angle unlimited length
- Angle fixed length
- Angle centre lines
- Point to Point unlimited length
- Point to Point fixed length
- Point to Point extension lines
- Multi lines

Note that unlimited length lines extend to either side of the electronic drawing area (i.e. 20,000 units long). This is a major benefit in a CAD system since you do not have to know the end points of a line to be able to draw it. When you used to work on your drafting board you would

start by framing your object with long light pencil lines until its' boundaries were delineated, and then you would heavy in the actual object. You can draw with Micro CADAM in exactly the same way. Use unlimited length lines to frame in the object and then use a combination of RELIMIT, CORNER, STYLE and TYPE to finish the outline of the object.

Since Micro CADAM is a point based CAD program the common denominator among all line types is that the first entry required is the location the line will pass through. Now this may be an actual existing point, or an indicated position, or tangent to a circle or an arc or it may lock on to either end point or the centre point of an existing line. There are many different ways to determine the location that a line will pass through.

Menus in Micro CADAM are intelligent. They anticipate the action you want to take and allow you to take that action by using SELECT, INDICATE, KEY, and Y/N in the proper sequence. A Road Map has been constructed for each of the line types. To use the Road Map start at the bottom and follow the options up the branch of the map (by using the SELECT, INDICATE, KEY and Y/N actions) until you reach your destination. Remember that after KEYING a number the first time it will be available for you to use for subsequent operations; just press the Y/N button on the mouse to accept any displayed number.

MENU ITEM TREE DESCRIPTION:

- / HORZ / Creates horizontal lines
- / VERT / Creates vertical lines
- / PARAL / Creates parallel lines
- / NORM / Creates normal lines (i.e. at right angles or 90 degrees to another line)
- / ANGLE / Creates lines at any angle
- / PT-PT / Creates lines between two points, or tangent to circles
- / MLT / Creates Multi-Lines. These are a special type of lines where they are joined end to end and become a single entity that can then be moved and joined, etc.
    - / CONSTR / Begins the construction of a multi-line
    - / MOD / Modifies an existing multi-line

- / PUSH / Pushes one segment of a multi-line to a new position
- / CNVT / Converts a multi-line to regular lines, or regular lines to a multi-line
- // JOIN / This menu modifier joins two separate multi-lines into a single multi-line
- // SHOW / This menu modifier displays all existing multi-lines
- // EXIT / This menu modifier exits the multi-line menu and returns to the regular line menu
- // AUTO / This menu modifier forces multi-lines to be constructed horizontal or vertical or at 45 degrees
- // NOAUTO / This menu modifier allows multi-lines to be created at any angle and any location

- // LENGTH / This menu modifier specifies that fixed length lines will be drawn
- // UNLIM / This menu modifier specifies that unlimited length lines (i.e. 20,000 units long) will be drawn
- // CTR / This menu modifier specifies that center lines will be drawn

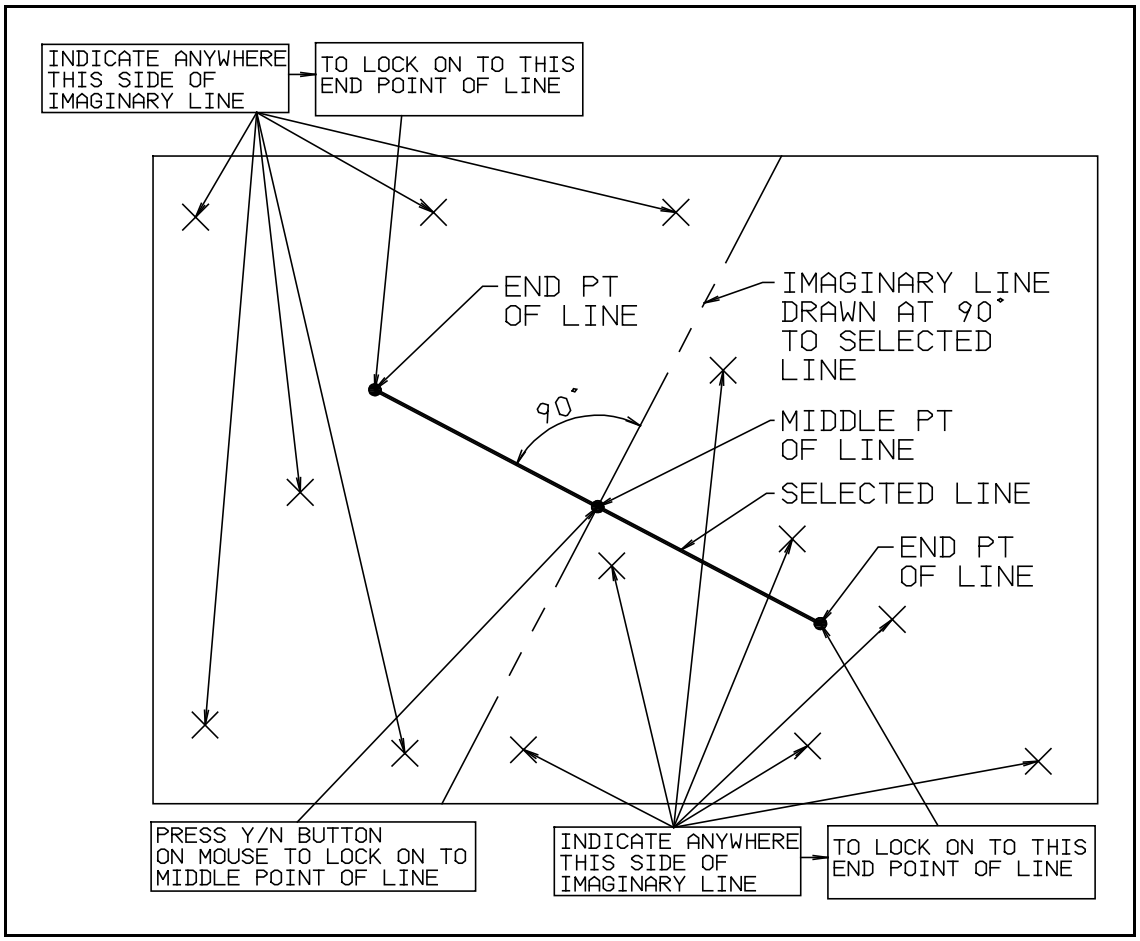

Figure 2 Example of 'Locking on' to selected line

The starting location of any line is usually determined by SELECTING an existing point or INDICATING an approximate position. There is another powerful way to accurately determine a location for the start of a line. Select any existing line on the screen and you will be able to 'lock' on to either end of the line or the middle of the line. This is especially useful where existing points have been erased and you want to 'lock' on to a line.

To 'lock' on to either end of an existing line follow these instructions:

Once an existing line is selected there is an imaginary line drawn through the middle of the selected line and at right angles (i.e. 90 deg) to it. You may indicate anywhere on the screen on one side of the imaginary line to reference that end of the selected line.

Therefore after SELECTING an existing line indicate either one half of the line or the

other half, and that end of the line will be used as a location for the start of another element.

To 'lock' on to the middle of an existing line follow these instructions:

After SELECTING an existing line press the Y/N button on the mouse and the middle of the line will be used as a location for the start of another element.

This is a fast and easy way to draw horizontal centre lines on any object. Just select a vertical line and press the Y/N button on the mouse.

Refer to Figure 2 on Page 12-4 for a graphical interpretation of these two techniques.

HINT: There are many situations where you may want to reflect or flip geometry about centerlines. This can be quickly and easily accomplished by creating an unlimited horizontal line through the middle of an existing vertical line, and an unlimited vertical line through the middle of an existing horizontal line. See Figure 3 on Page 12-6 for an example.

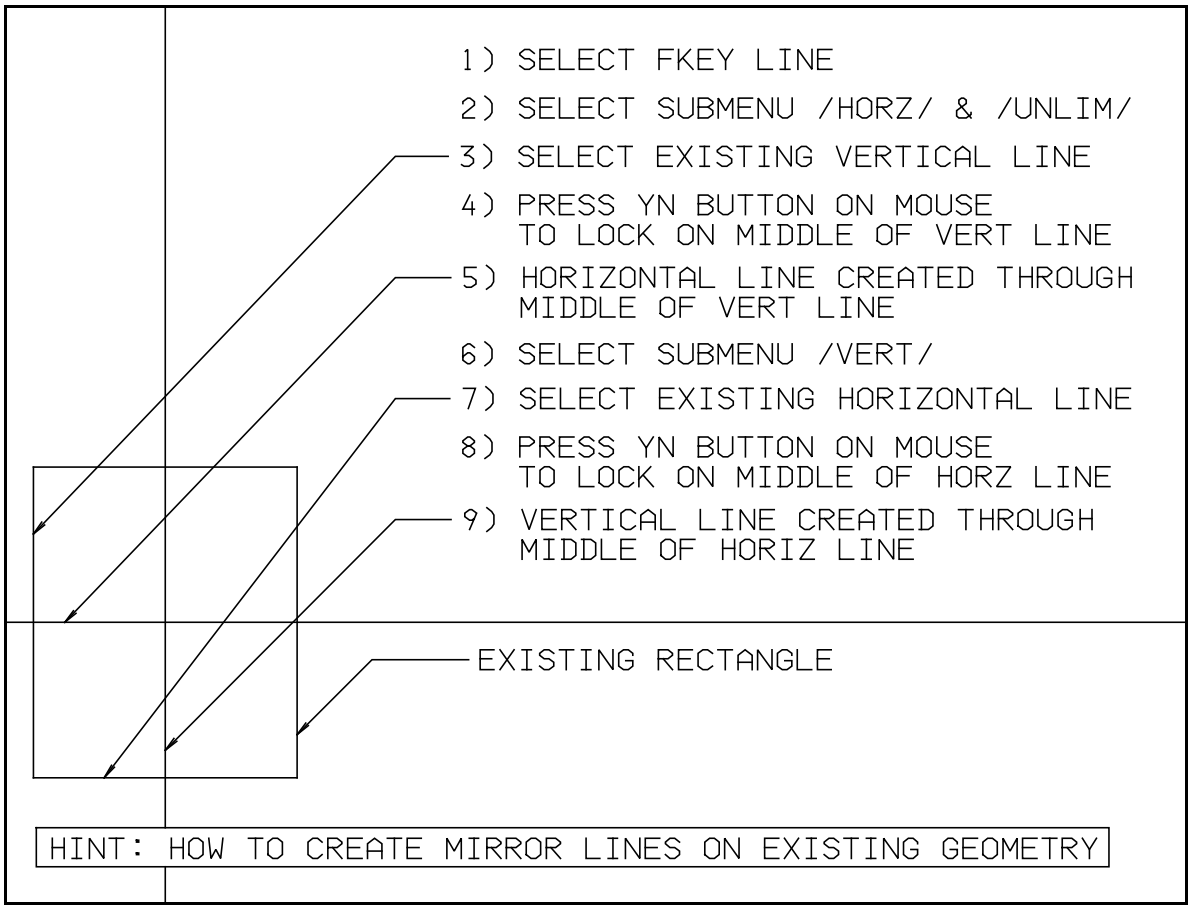

Figure 3 An example of how to create mirror lines on existing geometry

FKey LINE

SUBMENU / HORZ /

Fkey LINE submenu /LINE/ allows you to draw lines. Each line has been assigned a line number. The same line number is also referenced on the Line Road Map and the Action Summary. The different ways to draw horizontal lines are divided into beginner and advanced sections and are listed with page numbers as follows:

BEGINNER: (See Figure 4 on Page 12-10 for the Beginner Road Map for Horz Line)

HORZ LINE NO.	DESCRIPTION	PAGE NO.
1	An unlimited length horizontal line drawn at elevation Y	12-11
2	An unlimited length horizontal line drawn at an indicated location	12-12
3	An unlimited length horizontal line drawn through a point	12-14
4	An unlimited length horizontal line drawn tangent to a circle	12-15
5A	A fixed length horizontal line starting at a point with a keyed length in an indicated direction	12-16
5B	A fixed length horizontal line starting at a point and continuing until it crosses another element	12-18
5C	A fixed length horizontal line starting tangent to a circle with a keyed length in an indicated direction	12-19
6A	A horizontal center line which is centered on a point	12-21

ADVANCED: (See Figure 13 on Page 12-24 for the Advanced Road Map for Horz Line)

HORZ LINE NO.	DESCRIPTION	PAGE NO.
7	An unlimited length horizontal line drawn through the end of another line	12-25
8	An unlimited length horizontal line drawn through the middle of another line	12-26
5D	A fixed length horizontal line drawn through the end of another line	12-28
5E	A fixed length horizontal line drawn through the middle of another line	12-30
6B	A horizontal center line drawn through the end of another line	12-32
6C	A horizontal center line drawn through the middle of another line	12-33

FKey LINE

SUBMENU / HORZ /

BEGINNER

SECTION

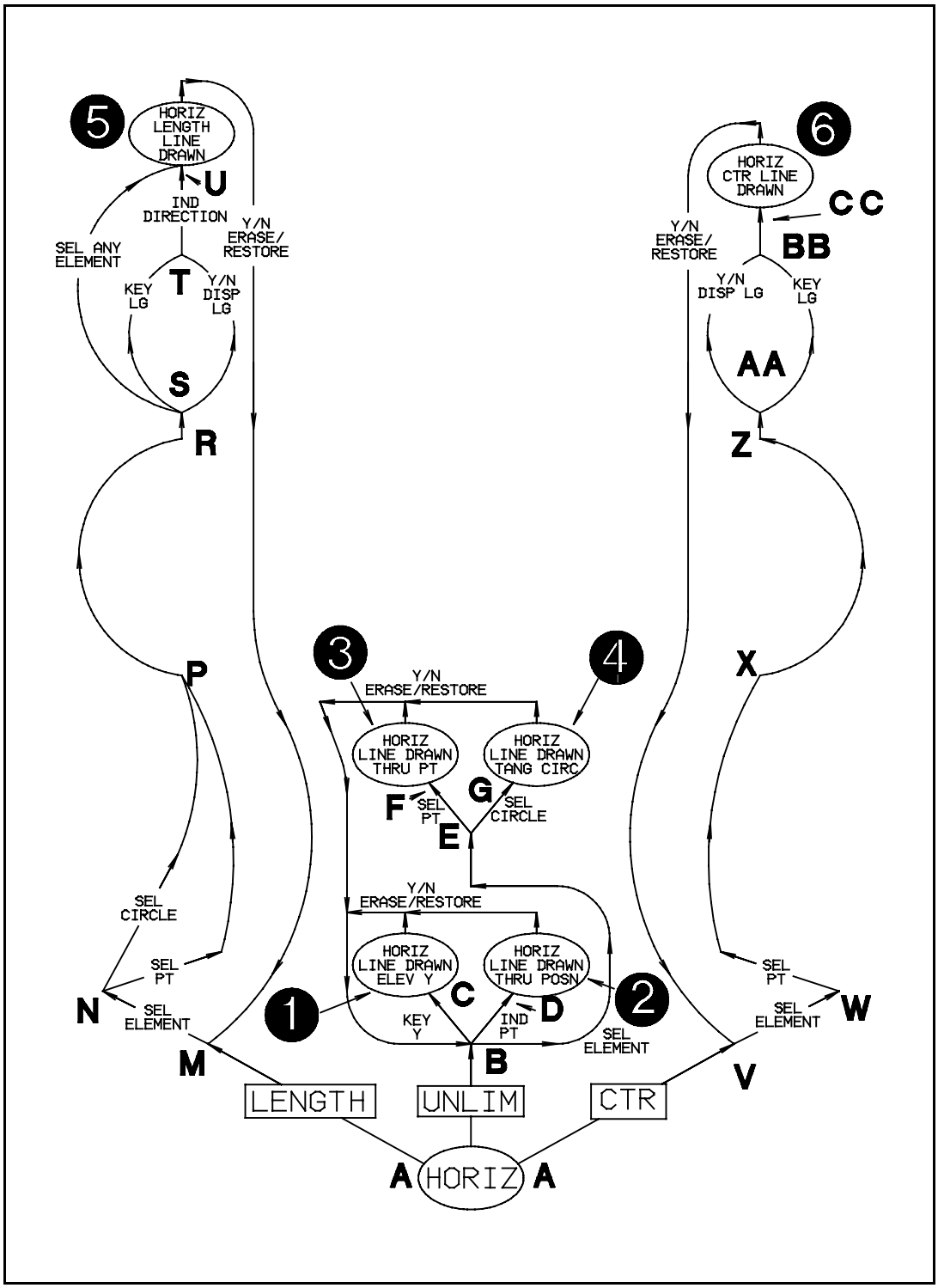

Figure 4 Beginner Road Map for Horizontal Line

1) AN UNLIMITED LENGTH HORIZONTAL LINE DRAWN AT ELEVATION Y:

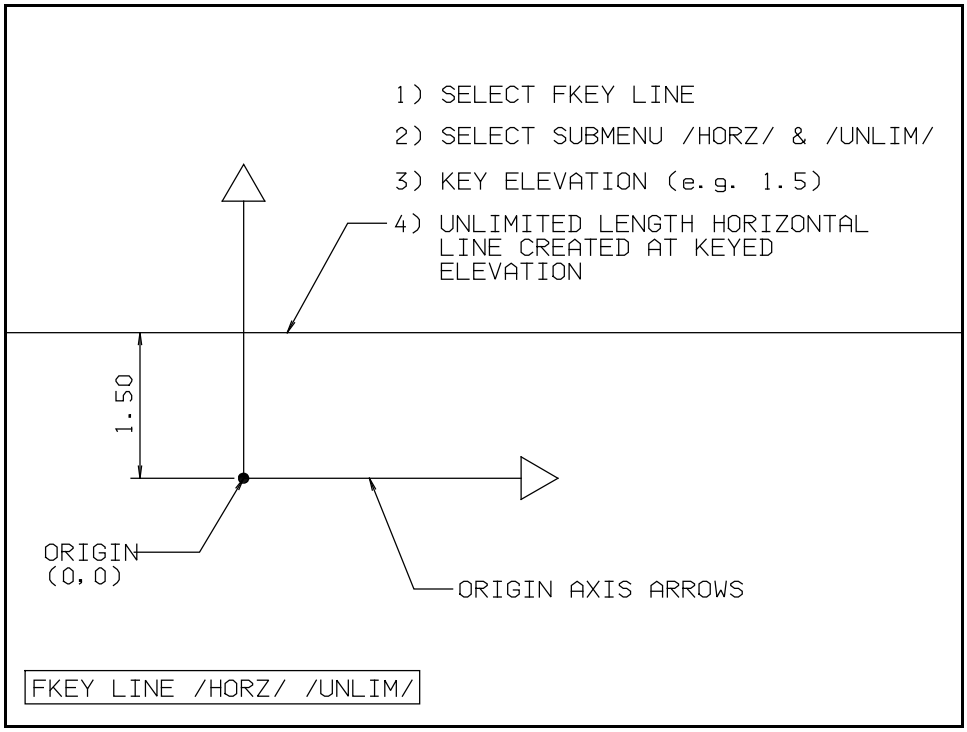

Figure 5 Example for an unlimited length horizontal line drawn at elevation Y (NODE PATH A,B,C)

To create this line follow these steps:

STEP NO.	ACTION / RESULT	MENU PROMPT (BEFORE THE ACTION) (2nd line from top of screen)	NODE NO.
1	SELECT Fkey LINE		A
2	SELECT submenu /HORZ/ and /UNLIM/ (If they are not already underlined)		A
3	KEY the Elevation of the horizontal line (e.g. 1.5")	Key Y / Ind point / Sel element	B
4	An unlimited length horizontal line is created at the keyed elevation	Key Y / Ind point / Sel element / YN erase-restore	C

2) AN UNLIMITED LENGTH HORIZONTAL LINE DRAWN AT INDICATED LOCATION:

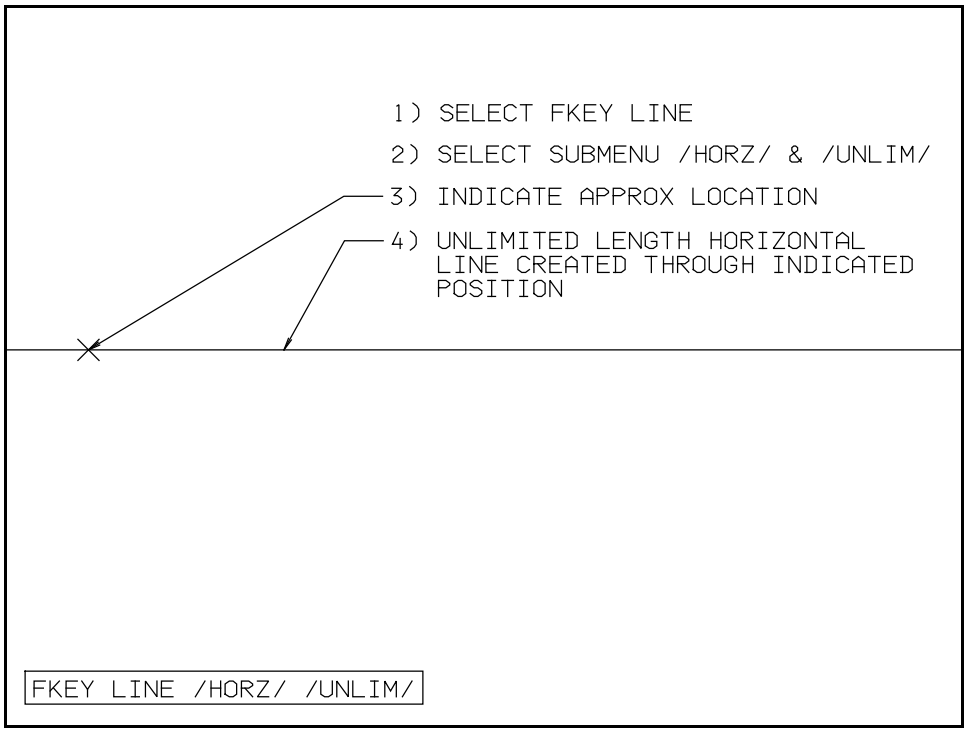

Figure 6 Example for an unlimited length horizontal line drawn at an indicated position (NODE PATH A,B,D)

To create this line follow these steps:

STEP NO.	ACTION / RESULT	MENU PROMPT (BEFORE THE ACTION) (2nd line from top of screen)	NODE NO.
1	SELECT Fkey LINE		A
2	SELECT submenu /HORZ/ and /UNLIM/ (If they are not already underlined)		A
3	INDICATE approximate location	Key Y / Ind point / Sel element	B
4	An unlimited length horizontal line is created at the INDICATED elevation	Key Y / Ind point / Sel element / YN erase-restore	D

Since the line you are drawing is horizontal the only co-ordinate it can have is vertical (i.e. the elevation). Type the elevation and press the ENTER key.

> Hint: As a quick way to draw an unlimited length horizontal line through the origin just press the ENTER key without typing in any number. By default you have entered 0 and the line will be drawn through the origin. If you press the Y/N button on the mouse, the line just drawn will be erased and you will be repositioned on the menu.

3) AN UNLIMITED LENGTH HORIZONTAL LINE DRAWN THROUGH A POINT:

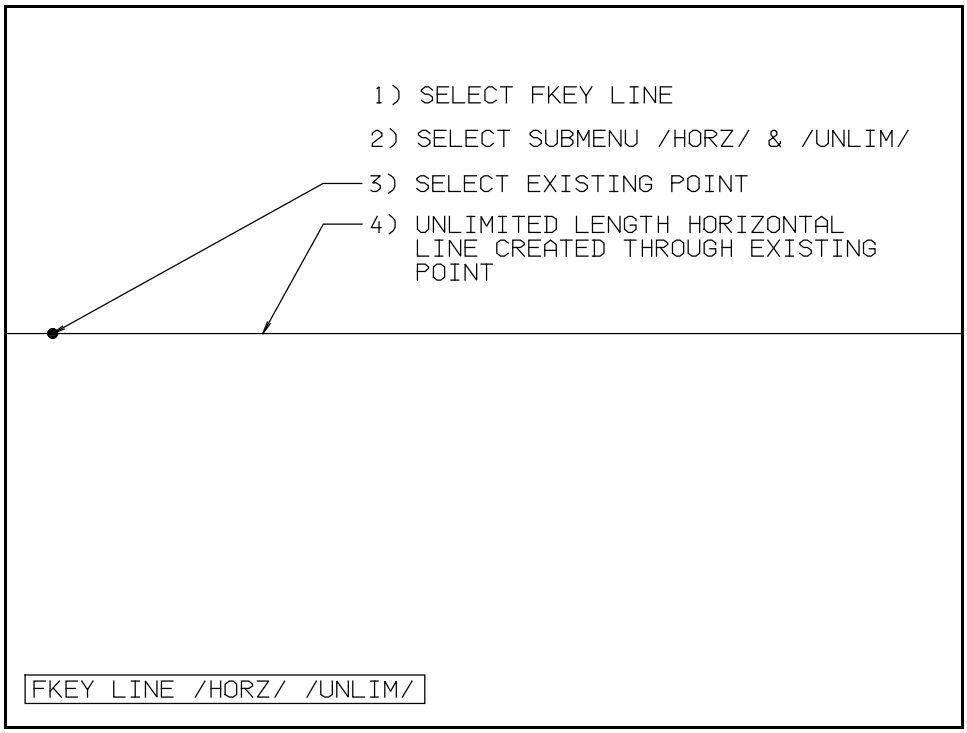

Figure 7 Example for an unlimited length horizontal line drawn through a point (NODE PATH A,B,E,F)

To create this line follow these steps:

STEP NO.	ACTION / RESULT	MENU PROMPT (BEFORE THE ACTION) (2nd line from top of screen)	NODE NO.
1	SELECT Fkey LINE		A
2	SELECT submenu /HORZ/ and /UNLIM/ (If they are not already underlined)		A
3	SELECT existing point	Key Y / Ind point / Sel element	E
4	An unlimited length horizontal line is created through the SELECTED point	Key Y / Ind point / Sel element / YN erase-restore	F

4) AN UNLIMITED LENGTH HORIZONTAL LINE DRAWN TANGENT TO A CIRCLE:

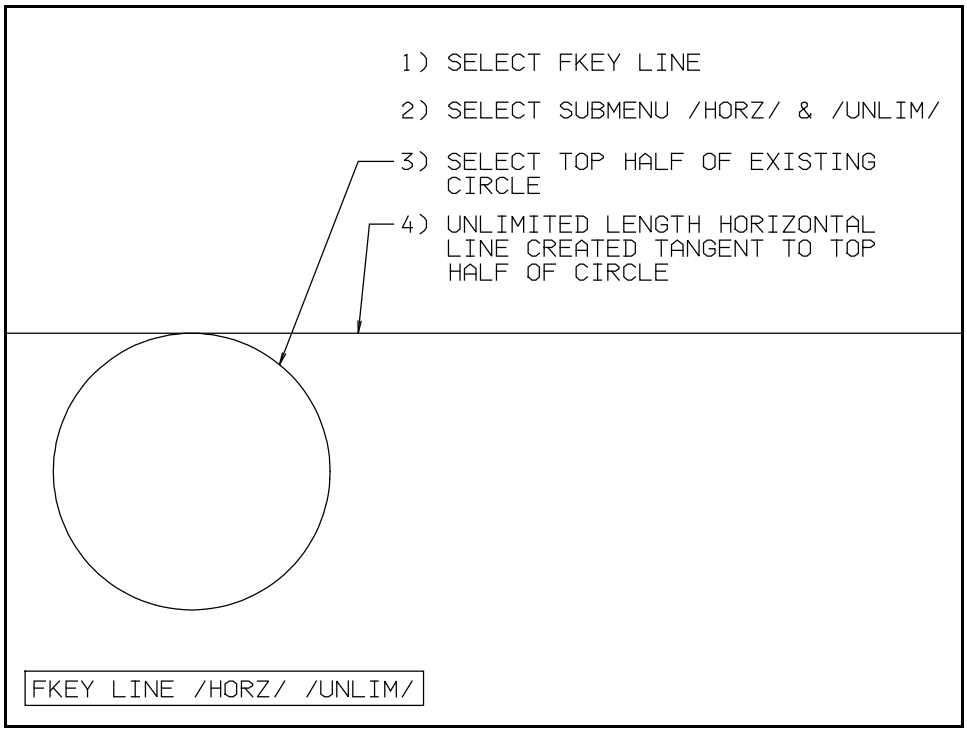

Figure 8 Example for an unlimited length horizontal line drawn tangent to a circle (NODE PATH A,B,E,G)

To create this line follow these steps:

STEP NO.	ACTION / RESULT	MENU PROMPT (BEFORE THE ACTION) (2nd line from top of screen)	NODE NO.
1	SELECT Fkey LINE		A
2	SELECT submenu /HORZ/ and /UNLIM/ (If they are not already underlined)		A
3	SELECT top half of existing circle	Key Y / Ind point / Sel element	E
4	An unlimited length horizontal line is created tangent to the top half of the selected circle	Key Y / Ind point / Sel element / YN erase-restore	G

5A) A FIXED LENGTH HORIZONTAL LINE STARTING AT A POINT WITH A KEYED LENGTH IN AN INDICATED DIRECTION:

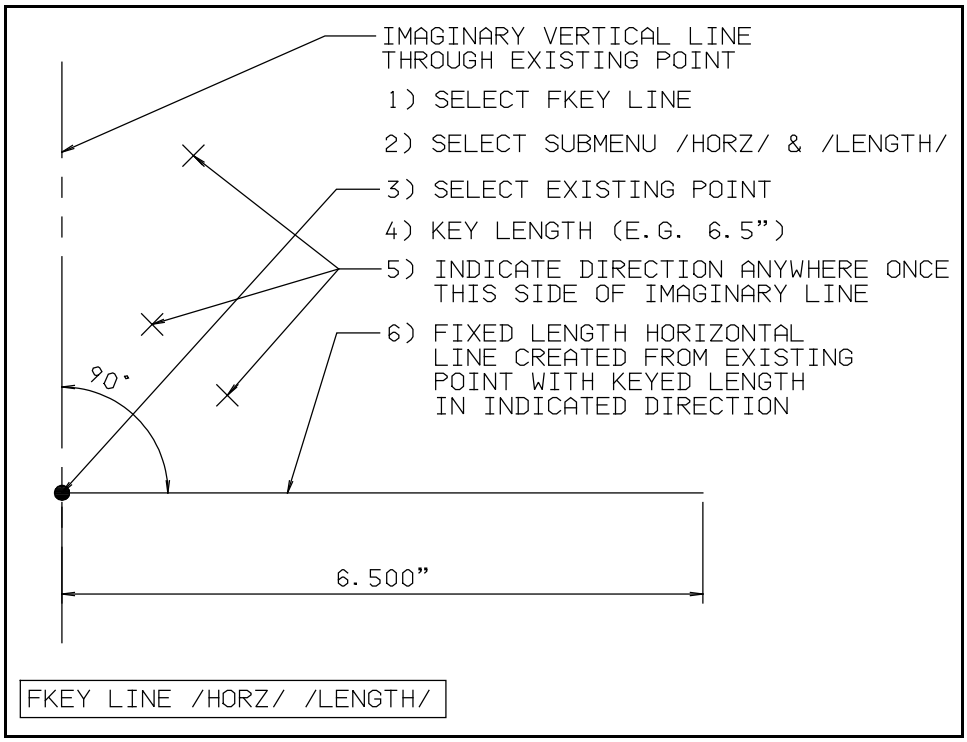

Figure 9 Example for a fixed length horizontal line starting at a point with a keyed length in an indicated direction (NODE PATH A,M,N,P,R,S,T,U)

To create this line follow these steps:

STEP NO.	ACTION / RESULT	MENU PROMPT (BEFORE THE ACTION) (2nd line from top of screen)	NODE NO.
1	**SELECT Fkey LINE**		**A**
2	**SELECT submenu /HORZ/ and /LENGTH/ (If they are not already underlined)**		**A**
3	**SELECT existing point. This is the starting point for the line.**	**Key X,Y / Ind point / Sel element**	**N**
4	**KEY length of line (e.g. 6.5")**	**Key length = 2.250 / Sel any element (Note: Key length number is the last number entered)**	**S**
5	**INDICATE direction once anywhere one side of the imaginary line. This determines the direction the line will go.**	**Ind direction**	**T**

STEP NO.	ACTION / RESULT	MENU PROMPT (BEFORE THE ACTION) (2nd line from top of screen)	NODE NO.
6	A fixed length horizontal line is created from the existing point. Its' length is the keyed in length and its' direction is in the indicated direction.	Key X,Y / Ind point / Sel element / YN erase-restore	U

5B) A FIXED LENGTH HORIZONTAL LINE STARTING AT A POINT AND CONTINUING UNTIL IT CROSSES ANOTHER ELEMENT :

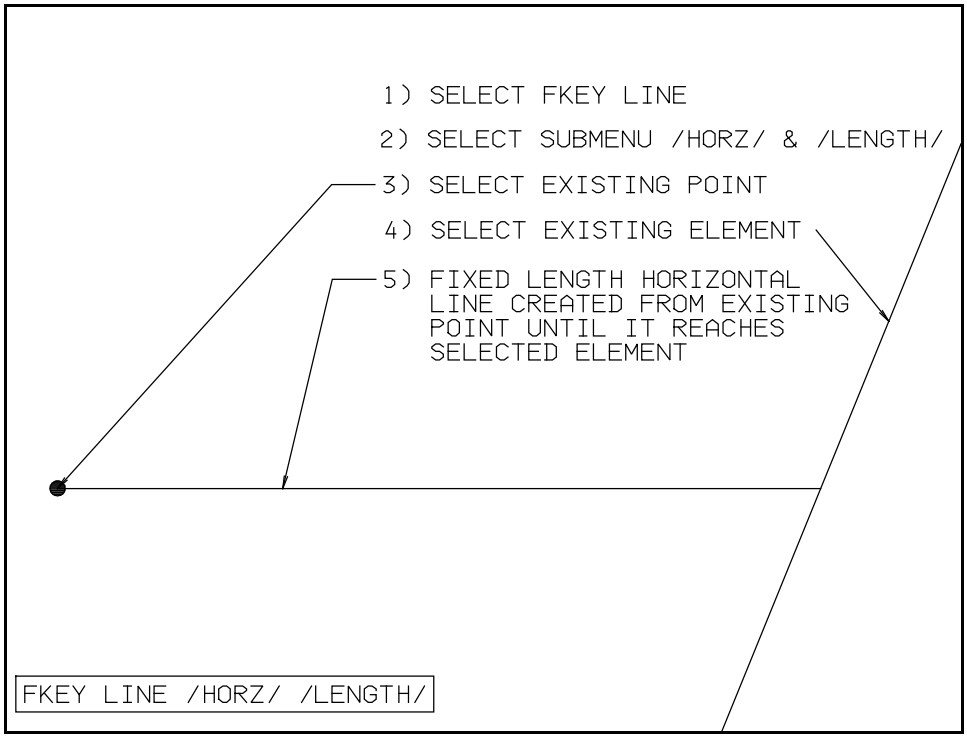

Figure 10 Example for a fixed length horizontal line starting at a point and running until it crosses another element (NODE PATH A,M,N,P,R,S,U)

To create this line follow these steps:

STEP NO.	ACTION / RESULT	MENU PROMPT (BEFORE THE ACTION) (2nd line from top of screen)	NODE NO.
1	SELECT Fkey LINE		A
2	SELECT submenu /HORZ/ and /LENGTH/ (If they are not already underlined)		A
3	SELECT existing point. This is the starting point for the line.	Key X,Y / Ind point / Sel element	N
4	SELECT existing element. The line will end at this element.	Key length = 2.2500 / Sel any element (Note: Key length number reflects the last number entered)	S
5	A fixed length horizontal line is created starting at the existing point and running until it crosses the selected element.	Key X,Y / Ind point / Sel element / YN erase-restore	U

5C) A FIXED LENGTH HORIZONTAL LINE STARTING TANGENT TO A CIRCLE WITH A KEYED LENGTH AND RUNNING IN AN INDICATED DIRECTION:

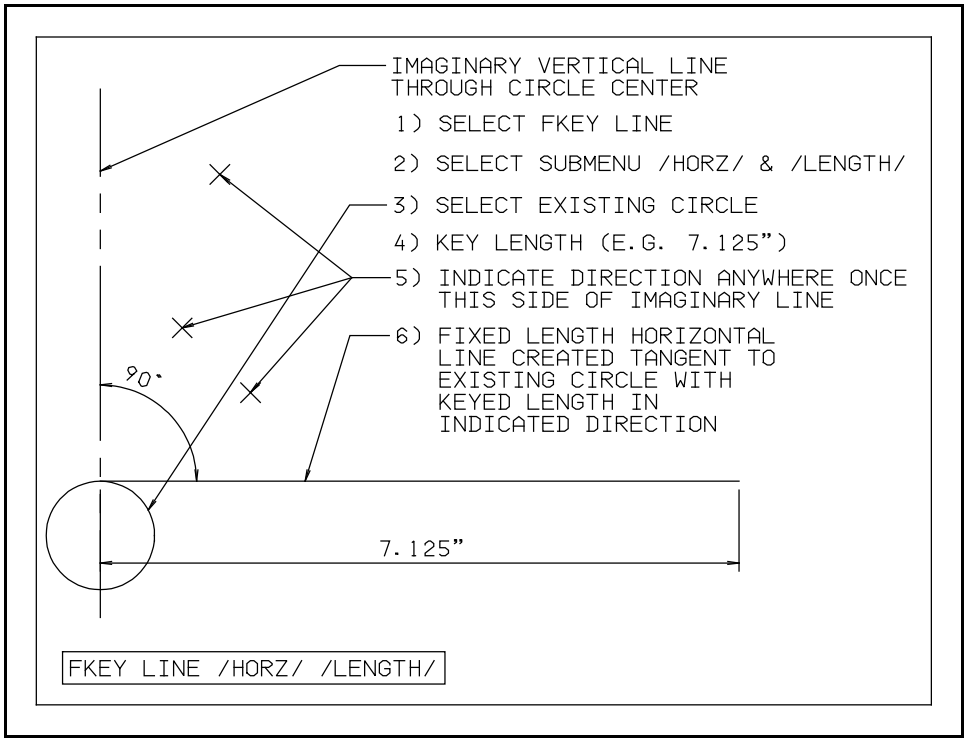

Figure 11 Example for a fixed length horizontal line starting tangent to a circle with a keyed length and running in an indicated direction (NODE PATH A,M,N,P,R,S,T,U)

To create this line follow these steps:

STEP NO.	ACTION / RESULT	MENU PROMPT (BEFORE THE ACTION) (2nd line from top of screen)	NODE NO.
1	**SELECT Fkey LINE**		**A**
2	**SELECT submenu /HORZ/ and /LENGTH/ (If they are not already underlined)**		**A**
3	**SELECT existing circle. The line will start tangent to this circle.**	**Key X,Y / Ind point / Sel element**	**N**
4	**KEY length (e.g. 7.125"). This will be the length of the line.**	**Key length = 2.25000 / Sel any element (Note: Key length number reflects last number entered)**	**S**
5	**INDICATE direction once anywhere one side of imaginary line.**	**Ind direction**	**T**

STEP NO.	ACTION / RESULT	MENU PROMPT (BEFORE THE ACTION) (2nd line from top of screen)	NODE NO.
6	A fixed length horizontal line is created tangent to an existing circle and extending for a keyed in length in the indicated direction.	Key X,Y / Ind point / Sel element / YN erase restore	U

6A) A HORIZONTAL CENTER LINE WHICH IS CENTERED ON A POINT:

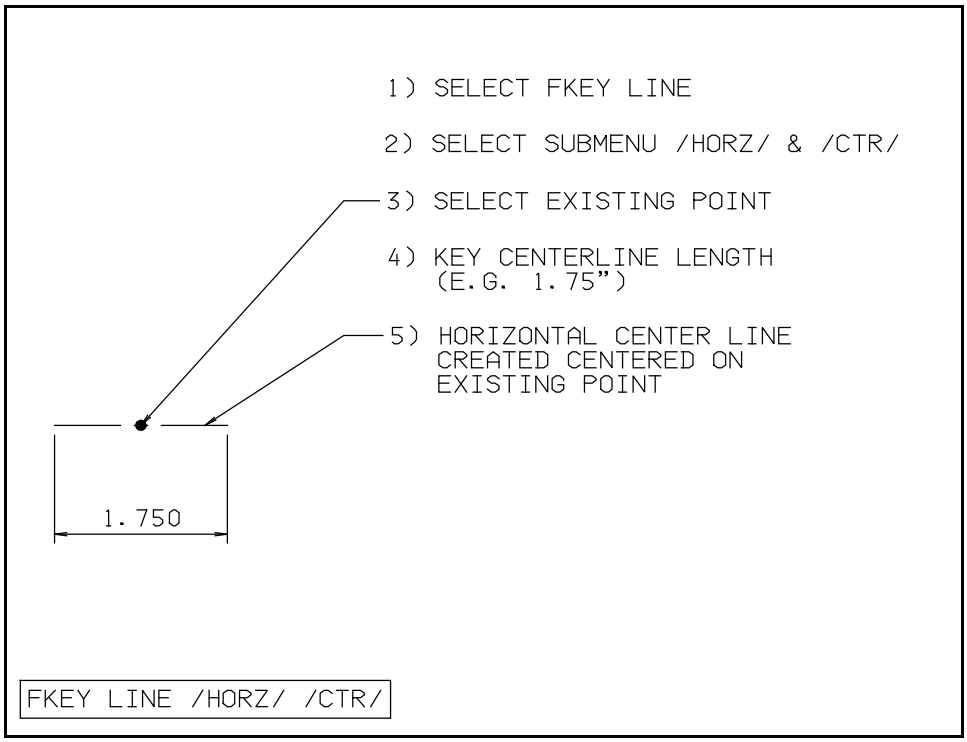

Figure 12 Example for a horizontal center line centered on a point (NODE PATH A,V,W,X,Z,AA,BB)

To create this line follow these steps:

STEP NO.	ACTION / RESULT	MENU PROMPT (BEFORE THE ACTION) (2nd line from top of screen)	NODE NO.
1	SELECT Fkey LINE		A
2	SELECT submenu /HORZ/ and /CTR/ (If they are not already underlined)		A
3	SELECT existing point.	Key X,Y / Ind point / Sel element	W
4	KEY center line length (e.g. 1.75"). This will be the total length of the center line.	Key length = 2.25000 (Note: Key length number reflects last number entered)	AA
5	A horizontal center line is created centered on an existing point.	Key X,Y / Ind point / Sel element	BB

FKey LINE

SUBMENU / HORZ /

ADVANCED

SECTION

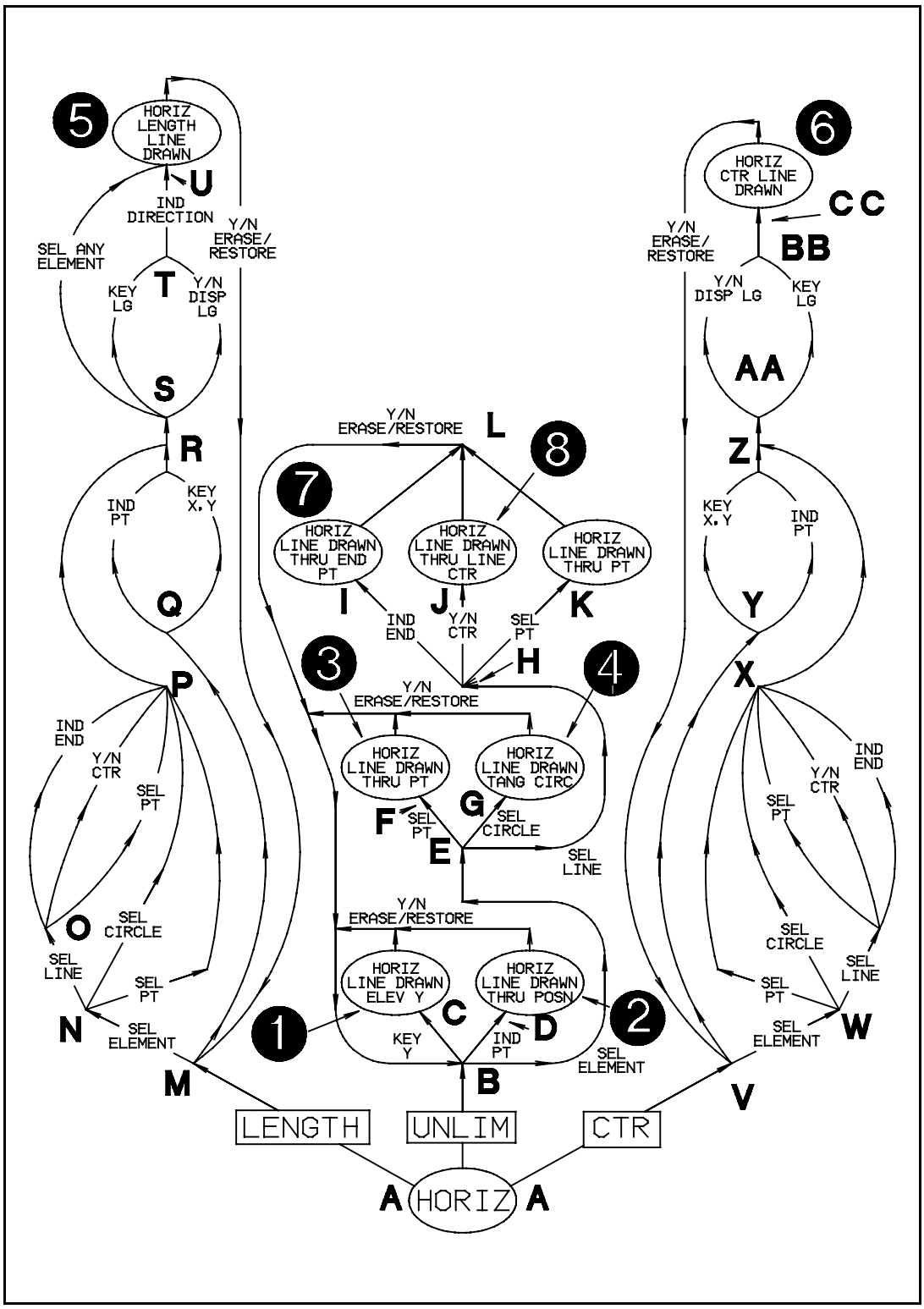

Figure 13 Advanced Road Map for Horizontal Line

7) AN UNLIMITED LENGTH HORIZONTAL LINE DRAWN THROUGH THE END OF ANOTHER LINE:

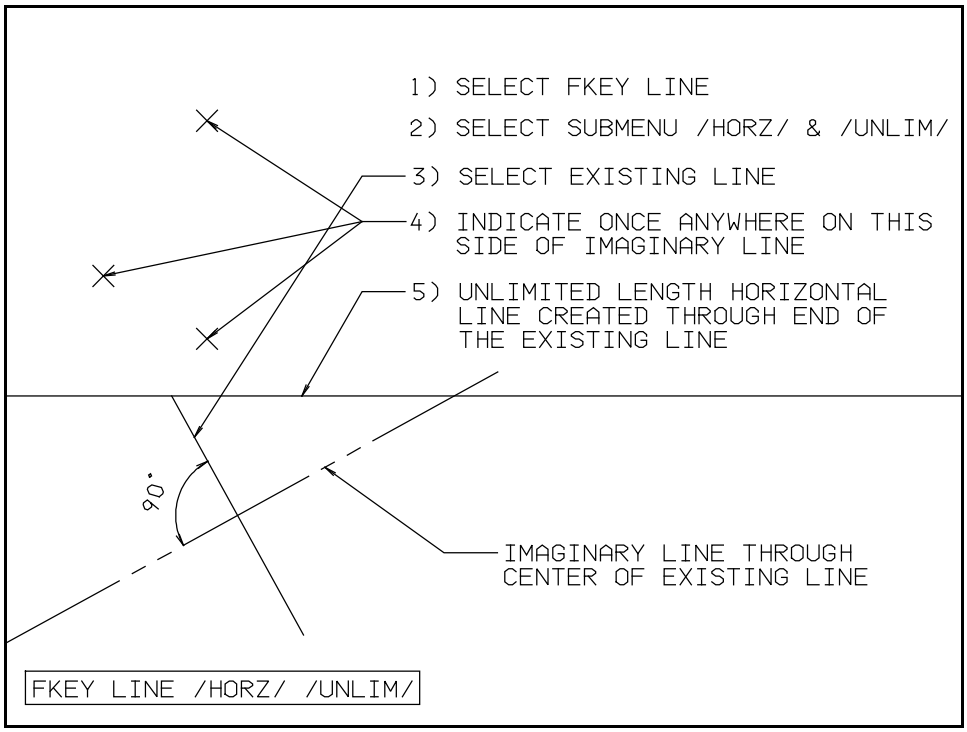

Figure 14 Example for an unlimited length horizontal line drawn through the end point of another line (NODE PATH A,B,E,H,I)

To create this line follow these steps:

STEP NO.	ACTION / RESULT	MENU PROMPT (BEFORE THE ACTION) (2nd line from top of screen)	NODE NO.
1	SELECT Fkey LINE		A
2	SELECT submenu /HORZ/ and /UNLIM/ (If they are not already underlined)		A
3	SELECT an existing line	Key Y / Ind point / Sel element	E
4	INDICATE once anywhere on one side of the imaginary line	Ind end / YN center / Sel point	H
5	An unlimited length horizontal line is created through the end of the existing line	Key Y / Ind point / Sel element / YN erase-restore	I

8) AN UNLIMITED LENGTH HORIZONTAL LINE DRAWN THROUGH THE MIDDLE OF ANOTHER LINE:

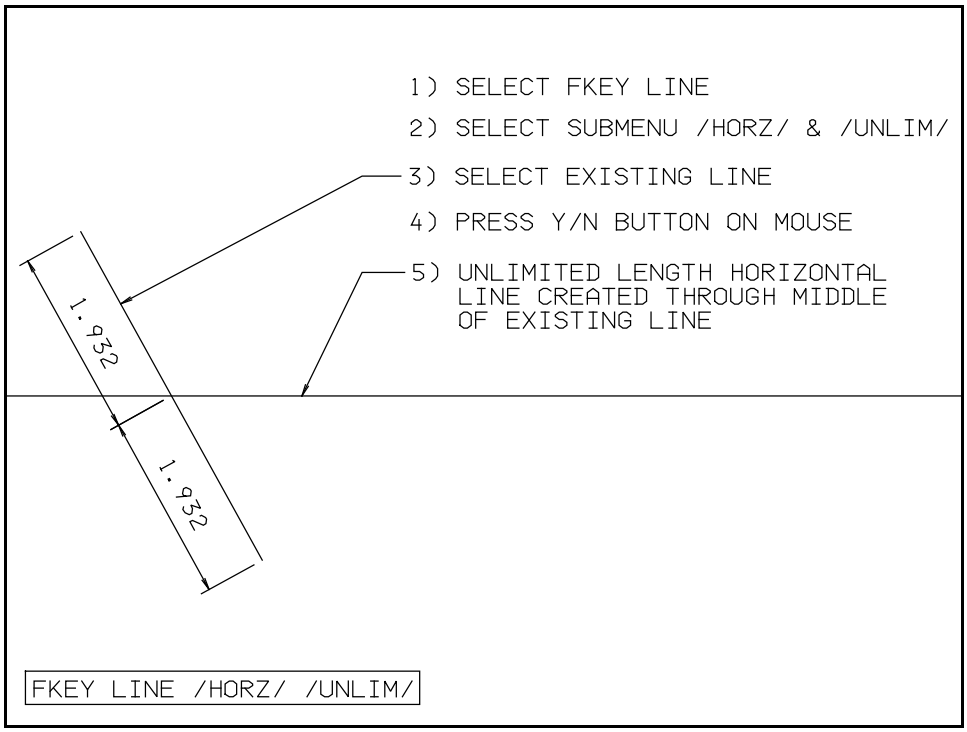

Figure 15 Example for an unlimited length horizontal line drawn through the middle point of another line (NODE PATH A,B,E,H,J)

To create this line follow these steps:

STEP NO.	ACTION / RESULT	MENU PROMPT (BEFORE THE ACTION) (2nd line from top of screen)	NODE NO.
1	SELECT Fkey LINE		A
2	SELECT submenu /HORZ/ and /UNLIM/ (If they are not already underlined)		A
3	SELECT an existing line	Key Y / Ind point / Sel element	E
4	Press YN button on mouse	Ind end / YN center / Sel point	H
5	An unlimited length horizontal line is created through the middle of the existing line	Key Y / Ind point / Sel element / YN erase-restore	J

Since the line you are drawing is horizontal the only co-ordinate it can have is vertical (i.e. the elevation). Type the elevation and press the ENTER key.

Hint: As a quick way to draw an unlimited length horizontal line through the origin just press the ENTER key without typing in any number. By default you have entered 0 and the line will be drawn through the origin. Press the Y/N button on the mouse. The line just drawn will be erased and you will be repositioned on the menu.

5D) A FIXED LENGTH HORIZONTAL LINE DRAWN THROUGH THE END POINT OF ANOTHER LINE:

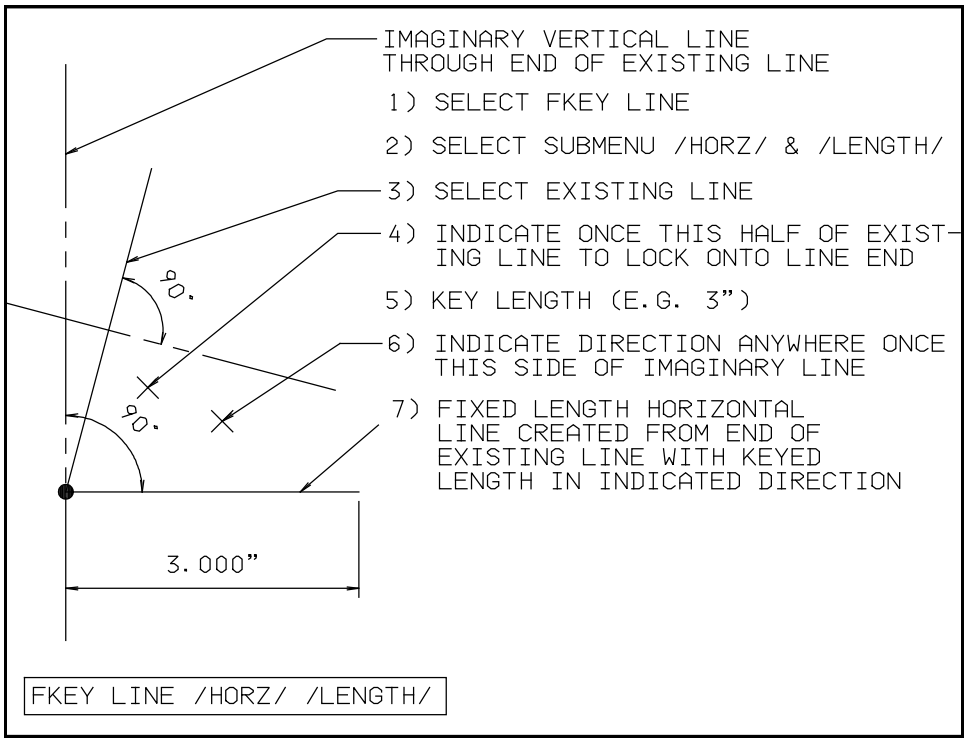

Figure 16 Example for a fixed length horizontal line drawn through the end point of another line (NODE PATH A,M,N,O,P,R,T,U)

To create this line follow these steps:

STEP NO.	ACTION / RESULT	MENU PROMPT (BEFORE THE ACTION) (2nd line from top of screen)	NODE NO.
1	**SELECT Fkey LINE**		**A**
2	**SELECT submenu /HORZ/ and /LENGTH/ (If they are not already underlined)**		**A**
3	**SELECT an existing line**	**Key X,Y / Ind point / Sel element**	**N**
4	**INDICATE once one half of existing line to lock onto line end**	**Ind end / YN center / Sel point**	**O**
5	**KEY line length (e.g. 3")**	**Key length = 2.250 / Sel element (Note: The actual number displayed here will be the last number keyed in**	**S**
6	**INDICATE direction of fixed length line once anywhere one side of imaginary line**	**Ind direction**	**T**

STEP NO.	ACTION / RESULT	MENU PROMPT (BEFORE THE ACTION) (2nd line from top of screen)	NODE NO.
7	A fixed length horizontal line is created from the end of the existing line with the keyed length (3") in the indicated direction	Key X,Y / Ind point / Sel element / YN erase-restore	U

5E) A FIXED LENGTH HORIZONTAL LINE DRAWN THROUGH THE MIDDLE OF ANOTHER LINE:

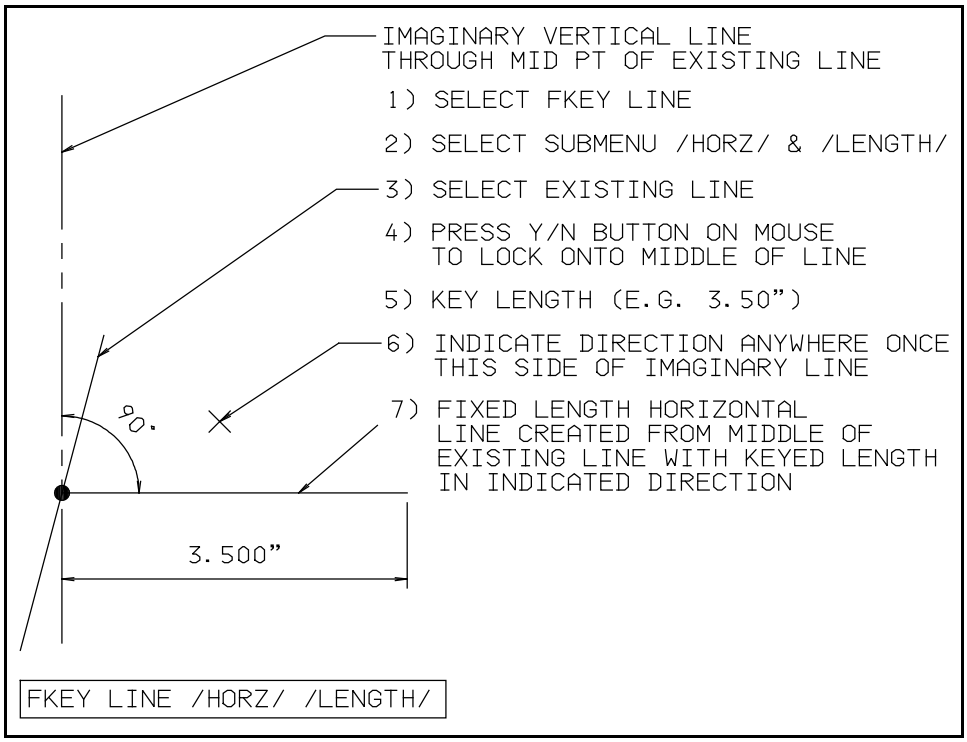

Figure 17 Example for a fixed length horizontal line drawn through the middle point of another line (NODE PATH A,M,N,O,P,R,S,T,U)

To create this line follow these steps:

STEP NO.	ACTION / RESULT	MENU PROMPT (BEFORE THE ACTION) (2nd line from top of screen)	NODE NO.
1	SELECT Fkey LINE		A
2	SELECT submenu /HORZ/ and /LENGTH/ (If they are not already underlined)		A
3	SELECT existing line	Key X,Y / Ind point / Sel element	N
4	PRESS YN button on mouse to lock onto the middle of the line	Ind end / YN center / Sel point	O
5	KEY line length (e.g. 3.5")	Key length = 3.250 / Sel element (Note: The actual number displayed here will be the last number keyed in)	S
6	INDICATE direction anywhere once one side of imaginary line.	Ind direction	T

STEP NO.	ACTION / RESULT	MENU PROMPT (BEFORE THE ACTION) (2nd line from top of screen)	NODE NO.
7	A fixed length horizontal line is created from the middle of the existing line with the keyed length (3.5") in the indicated direction	Key X,Y / Ind point / Sel element / YN erase-restore	U

6B) A HORIZONTAL CENTER LINE DRAWN THROUGH THE END OF ANOTHER LINE:

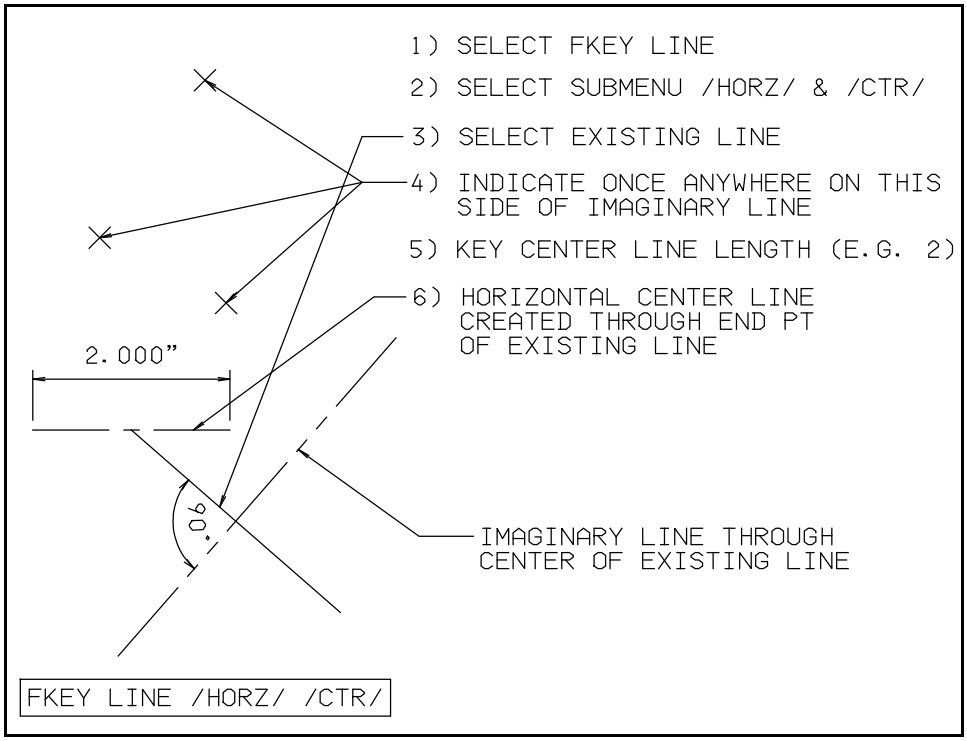

Figure 18 Example for a horizontal center line drawn through the end point of another line (NODE PATH A,V,W,X,Z,AA,BB)

To create this line follow these steps:

STEP NO.	ACTION / RESULT	MENU PROMPT (BEFORE THE ACTION) (2nd line from top of screen)	NODE NO.
1	SELECT Fkey LINE.		A
2	SELECT submenu /HORZ/ and /CTR/ (If they are not already underlined).		A
3	SELECT an existing line.	Key X,Y / Ind point / Sel element	W
4	INDICATE once anywhere on one side of the imaginary line.	Ind end / YN center / Sel point	W
5	KEY center line length (e.g. 2 for 2") This is the overall length of the center line.	Key length = 2.000 / Sel any element (Note: The actual number displayed here will be the last number keyed in)	AA
6	A horizontal center line is created through the end of the existing line.	Key X,Y / Ind point / Sel element / YN erase-restore	CC

6C) A HORIZONTAL CENTER LINE DRAWN THROUGH THE MIDDLE OF ANOTHER LINE :

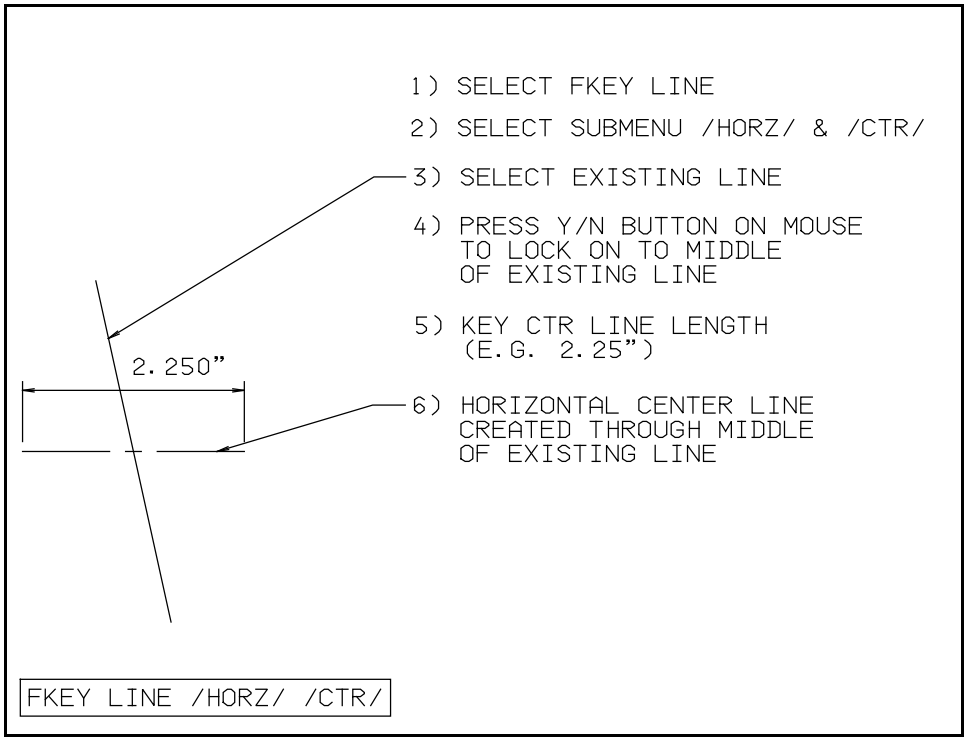

Figure 19 Example for a horizontal center line drawn through the middle point of another line (NODE PATH A,V,W,X,Z,AA,BB)

To create this line follow these steps:

STEP NO.	ACTION / RESULT	MENU PROMPT (BEFORE THE ACTION) (2nd line from top of screen)	NODE NO.
1	SELECT Fkey LINE		A
2	SELECT submenu /HORZ/ and /CTR/ (If they are not already underlined)		A
3	SELECT existing line.	Key X,Y / Ind point / Sel element	W
4	PRESS the YN button on the mouse to lock onto the middle of the existing line.	Ind end / YN center / Sel point	W
5	KEY the center line length (e.g. 2.25)	Key length = 2.250 / Sel any element (Note: The actual number displayed here will be the last number keyed in)	AA
6	A horizontal center line is created through the middle of the existing line	Key X,Y / Ind point / Sel element / YN erase-restore	CC

All menus in Micro CADAM are intelligent. They anticipate your actions wherever possible. The results depend on the sequence that the **SELECT, INDICATE, KEY** and **Y/N** keys are pressed. This is summarized for FKey LINE / HORZ / and shown in chart form below:

FKEY LINE /HORZ/ ACTION SUMMARY

LINE NO.	TO CREATE	1ST ACTION	2ND ACTION	3RD ACTION	4TH ACTION	NODEPATH
BEGINNER SECTION						
1	An unlimited length horizontal line drawn at elevation Y	KEY Y				A,B,C
2	An unlimited length horizontal line drawn at indicated locations	IND position				A,B,D
3	An unlimited length horizontal line drawn through a point	SEL Pt				A,C,D,E,F
4	An unlimited length horizontal line drawn tangent to a circle	SEL Circle				A,B,E,G
5A	A fixed length horizontal line starting at a point with a keyed length in an indicated direction	SEL Pt	KEY line length	IND direction		A,M,N,P,R,S, T,U
5B	A fixed length horizontal line starting at a point and continuing until it crosses another element	SEL Pt	SEL element			A,M,N,P,R,S, U
5C	A fixed length horizontal line starting tangent to a circle with a keyed length and running in an indicated direction	SEL Circle	KEY line length	IND direction		A,M,N,P,R,S, T,U
6A	A horizontal center line which is centered on a point	SEL Pt	KEY center line length			A,V,W,X,Z,A A,BB
ADVANCED SECTION						
7	An unlimited length horizontal line drawn through the end of another line	SEL Line	IND End			A,B,E,H,I
8	An unlimited length horizontal line drawn through the middle of another line	SEL Line	Y/N Center			A,B,E,H,J
5D	A fixed length line drawn through the end point of another line	SEL Line	IND End	KEY Line length	IND Direction	A,M,N,O,P,R, T,U
5E	A fixed length horizontal line drawn through the middle of another line	SEL Line	Y/N Center	KEY Line length	IND Direction	A,M,N,O,P,R, S,T,U
6B	A horizontal center line drawn through the end of another line	SEL Line	IND end	KEY center line length		A,V,W,X,Z,A A,BB
6C	A horizontal center line drawn through the middle of another line	SEL Line	Y/N Center	KEY center line length		A,V,W,X,Z,A A,BB

FKey LINE

SUBMENU / VERT /

Fkey LINE submenu /LINE/ allows you to draw lines. Each line has been assigned a line number. The same line number is also referenced on the Line Road Map and the Action Summary. The different ways to draw vertical lines are divided into beginner and advanced sections and are listed with page numbers as follows:

BEGINNER: (See Figure 20 on Page 12-38 for the Beginner Road Map for Vert Line)

VERT LINE NO.	DESCRIPTION	PAGE NO.
1	An unlimited length vertical line drawn at elevation Y	12-39
2	An unlimited length vertical line drawn at an indicated location	12-40
3	An unlimited length vertical line drawn through a point	12-42
4	An unlimited length vertical line drawn tangent to a circle	12-43
5A	A fixed length vertical line starting at a point with a keyed length in an indicated direction	12-44
5B	A fixed length vertical line starting at a point and continuing until it crosses another element	12-46
5C	A fixed length vertical line starting tangent to a circle with a keyed length in an indicated direction	12-47
6A	A vertical center line which is centered on a point	12-49

ADVANCED: (See Figure 29 on Page 12-52 for the Advanced Road Map for Vert Line)

VERT LINE NO.	DESCRIPTION	PAGE NO.
7	An unlimited length vertical line drawn through the end of another line	12-53
8	An unlimited length vertical line drawn through the middle of another line	12-54
5D	A fixed length vertical line drawn through the end of another line	12-55
5E	A fixed length vertical line drawn through the middle of another line	12-57
6B	A vertical center line drawn through the end of another line	12-59
6C	A vertical center line drawn through the middle of another line	12-60

FKey LINE

SUBMENU / VERT /

BEGINNER

SECTION

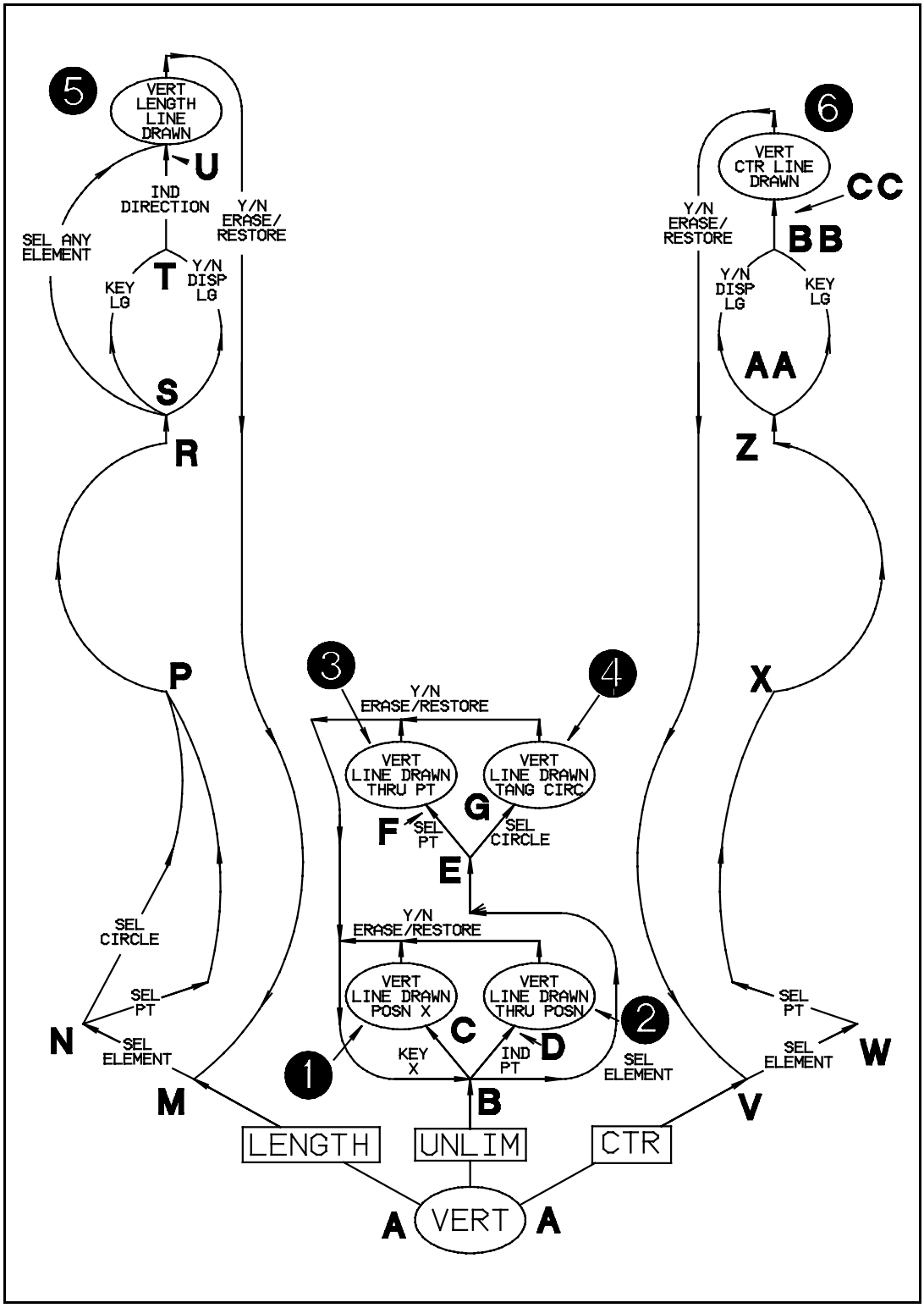

Figure 20 Beginner Road Map for Vertical Line

1) AN UNLIMITED LENGTH VERTICAL LINE DRAWN AT POSITION X:

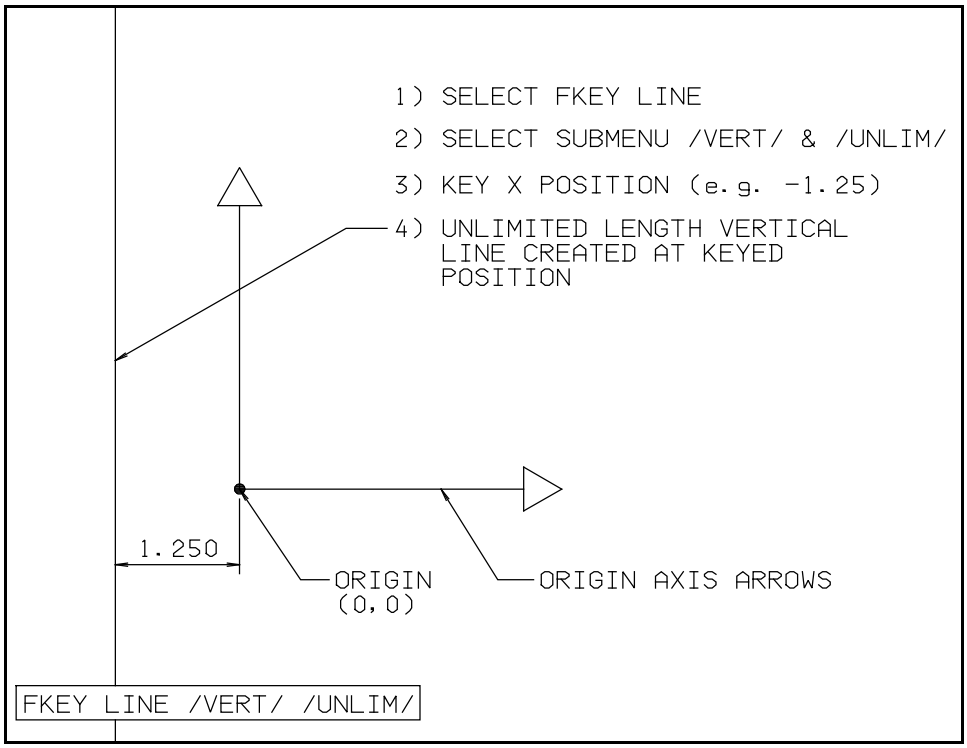

Figure 21 Example for an unlimited length vertical line drawn at position X (NODE PATH A,B,C)

To create this line follow these steps:

STEP NO.	ACTION / RESULT	MENU PROMPT (BEFORE THE ACTION) (2nd line from top of screen)	NODE NO.
1	**SELECT Fkey LINE**		**A**
2	**SELECT submenu /VERT/ and /UNLIM/ (If they are not already underlined)**		**A**
3	**KEY the position of the vertical line (e.g. -1.25)**	**Key X / Ind point / Sel element**	**B**
4	**An unlimited length vertical line is created at the keyed position**	**Key X / Ind point / Sel element / YN erase-restore**	**C**

2) AN UNLIMITED LENGTH VERTICAL LINE DRAWN AT INDICATED LOCATION:

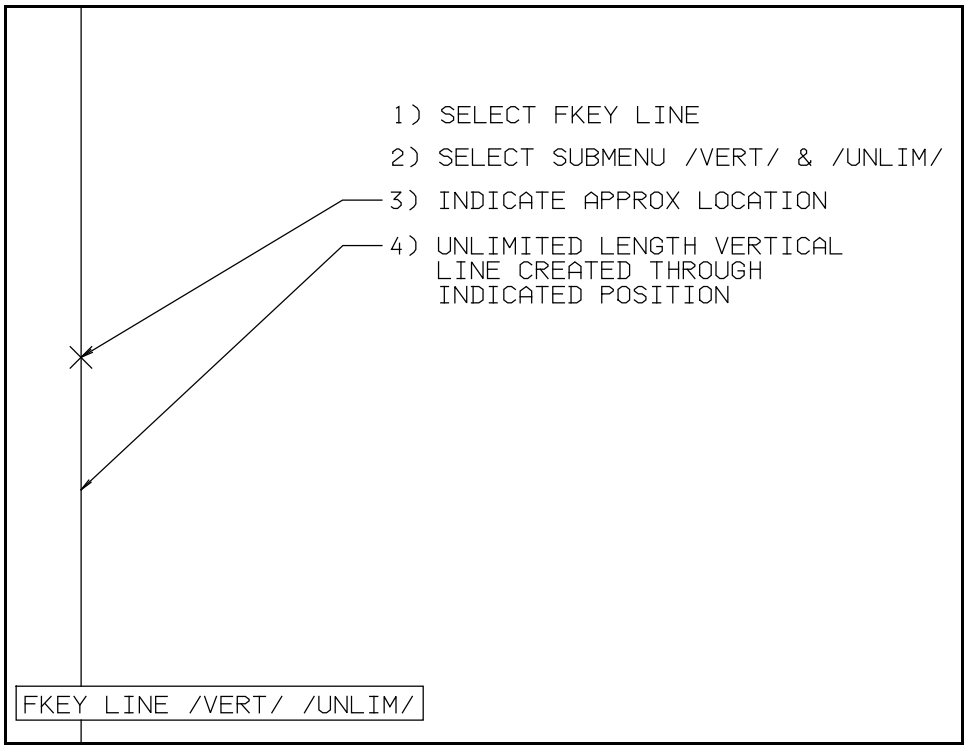

Figure 22 Example for an unlimited length vertical line drawn at an indicated position (NODE PATH A,B,D)

To create this line follow these steps:

STEP NO.	ACTION / RESULT	MENU PROMPT (BEFORE THE ACTION) (2nd line from top of screen)	NODE NO.
1	SELECT Fkey LINE		A
2	SELECT submenu /VERT/ and /UNLIM/ (If they are not already underlined)		A
3	INDICATE approximate location	Key X / Ind point / Sel element	B
4	An unlimited length vertical line is created at the INDICATED position	Key X / Ind point / Sel element / YN erase-restore	D

Since the line you are drawing is vertical the only co-ordinate it can have is horizontal (i.e. the X position). Type the X position and press the ENTER key.

> Hint: As a quick way to draw an unlimited length vertical line through the origin just press the ENTER key without typing in any number. By default you have entered 0 and the line will be drawn through the origin. If you press the Y/N button on the mouse, the line just drawn will be erased and you will be repositioned on the menu.

3) AN UNLIMITED LENGTH VERTICAL LINE DRAWN THROUGH A POINT:

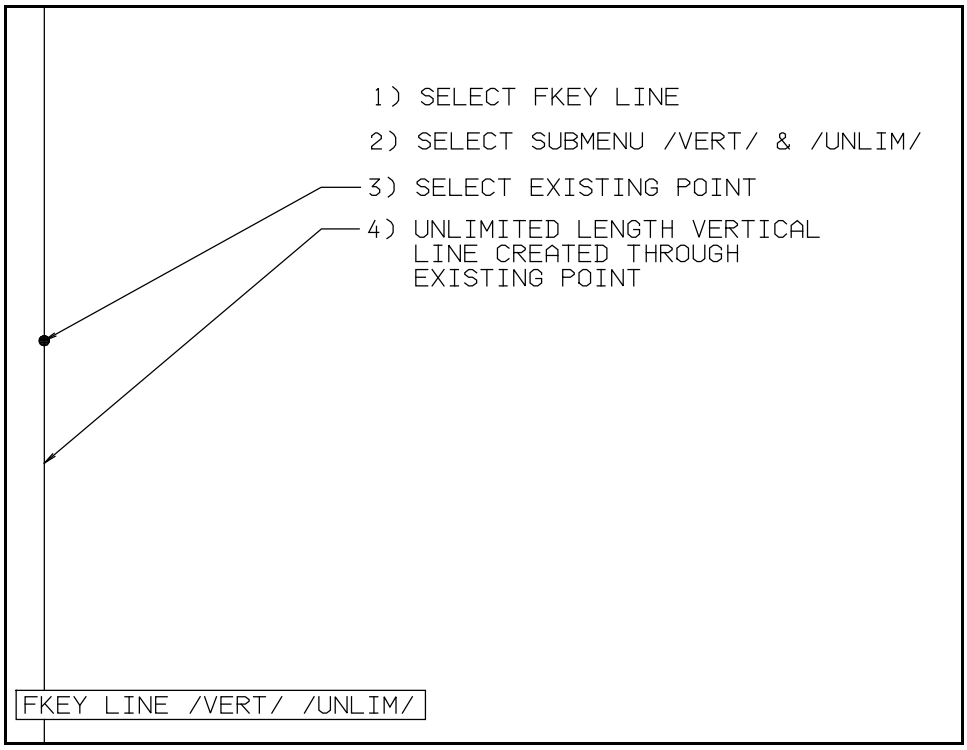

Figure 23 Example for an unlimited length vertical line drawn through a point (NODE PATH A,B,E,F)

To create this line follow these steps:

STEP NO.	ACTION / RESULT	MENU PROMPT (BEFORE THE ACTION) (2nd line from top of screen)	NODE NO.
1	SELECT Fkey LINE		A
2	SELECT submenu /VERT/ and /UNLIM/ (If they are not already underlined)		A
3	SELECT existing point	Key X / Ind point / Sel element	E
4	An unlimited length vertical line is created through the SELECTED point	Key X / Ind point / Sel element / YN erase-restore	F

4) AN UNLIMITED LENGTH VERTICAL LINE DRAWN TANGENT TO A CIRCLE:

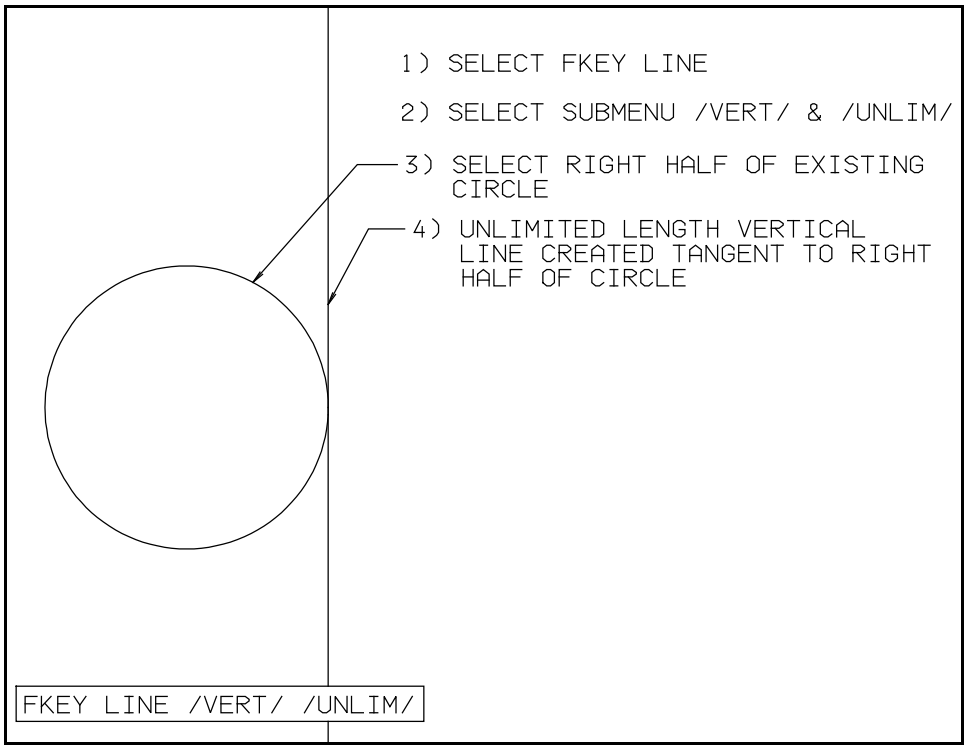

Figure 24 Example for an unlimited length vertical line drawn tangent to a circle (NODE PATH A,B,E,G)

To create this line follow these steps:

STEP NO.	ACTION / RESULT	MENU PROMPT (BEFORE THE ACTION) (2nd line from top of screen)	NODE NO.
1	SELECT Fkey LINE		A
2	SELECT submenu /VERT/ and /UNLIM/ (If they are not already underlined)		A
3	SELECT right half of existing circle	Key X / Ind point / Sel element	E
4	An unlimited length vertical line is created tangent to the right half of the selected circle	Key X / Ind point / Sel element / YN erase-restore	G

5A) A FIXED LENGTH VERTICAL LINE STARTING AT A POINT WITH A KEYED LENGTH IN AN INDICATED DIRECTION:

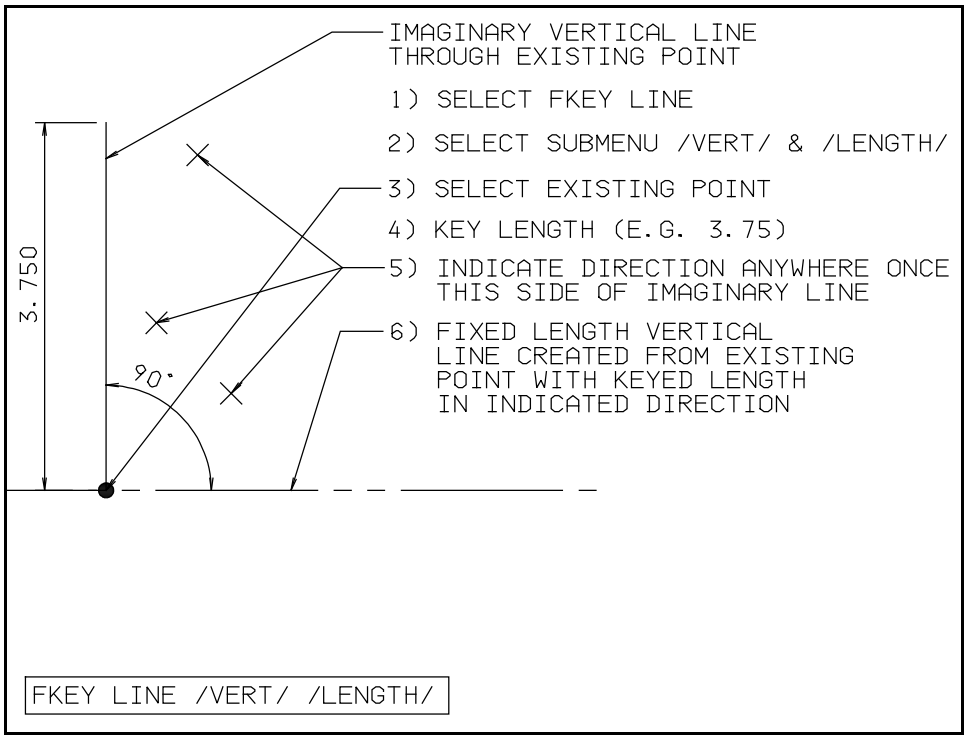

Figure 25 Example for a fixed length vertical line starting at a point with a keyed length in an indicated direction (NODE PATH A,M,N,P,R,S,T,U)

To create this line follow these steps:

STEP NO.	ACTION / RESULT	MENU PROMPT (BEFORE THE ACTION) (2nd line from top of screen)	NODE NO.
1	**SELECT Fkey LINE**		**A**
2	**SELECT submenu /VERT/ and /LENGTH/ (If they are not already underlined)**		**A**
3	**SELECT existing point. This is the starting point for the line.**	**Key X,Y / Ind point / Sel element**	**N**
4	**KEY length of line (e.g. 3.75)**	**Key length = 2.250 / Sel any element (Note: Key length number reflects the last number entered)**	**S**
5	**INDICATE direction once anywhere one side of the imaginary line. This determines the direction the line will go.**	**Ind direction**	**T**

STEP NO.	ACTION / RESULT	MENU PROMPT (BEFORE THE ACTION) (2nd line from top of screen)	NODE NO.
6	A fixed length vertical line is created from the existing point. Its' length is the keyed in length and its' direction is in the indicated direction.	Key X,Y / Ind point / Sel element / YN erase-restore	U

5B) A FIXED LENGTH VERTICAL LINE STARTING AT A POINT AND CONTINUING UNTIL IT CROSSES ANOTHER ELEMENT :

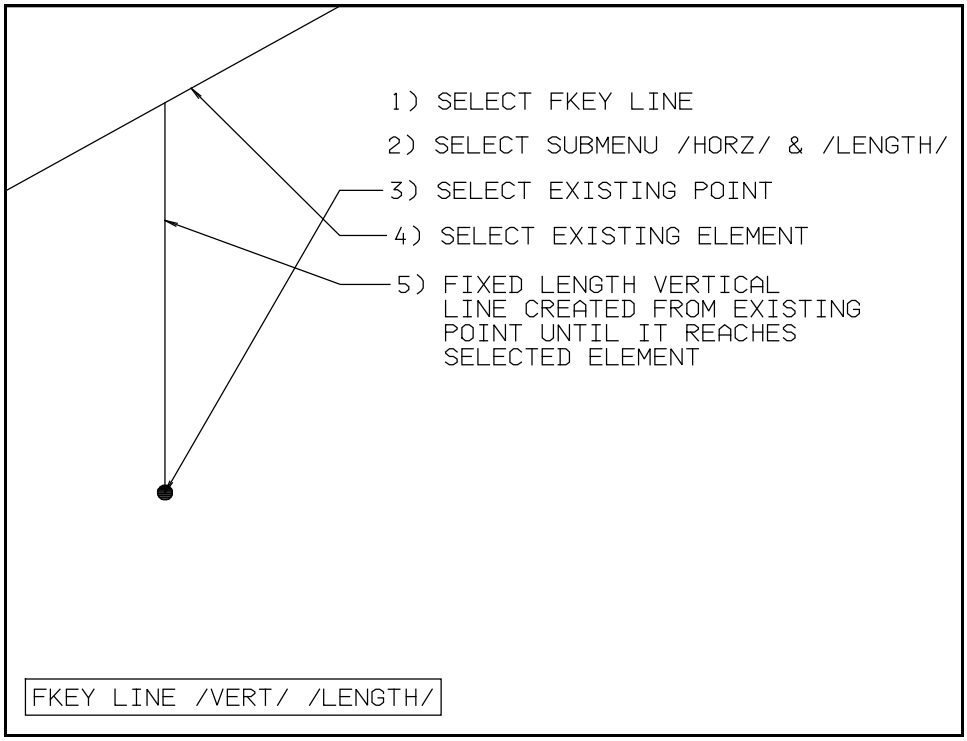

Figure 26 Example for a fixed length vertical line starting at a point and running until it crosses another element (NODE PATH A,M,N,P,R,S,U)

To create this line follow these steps:

STEP NO.	ACTION / RESULT	MENU PROMPT (BEFORE THE ACTION) (2nd line from top of screen)	NODE NO.
1	SELECT Fkey LINE		A
2	SELECT submenu /VERT/ and /LENGTH/ (If they are not already underlined)		A
3	SELECT existing point. This is the starting point for the line.	Key X,Y / Ind point / Sel element	N
4	SELECT existing element. The line will end at this element.	Key length = 2.2500 / Sel any element (Note: Key length number reflects the last number entered)	S
5	A fixed length vertical line is created starting at the existing point and running until it crosses the selected element.	Key X,Y / Ind point / Sel element / YN erase-restore	U

5C) A FIXED LENGTH VERTICAL LINE STARTING TANGENT TO A CIRCLE WITH A KEYED LENGTH AND RUNNING IN AN INDICATED DIRECTION:

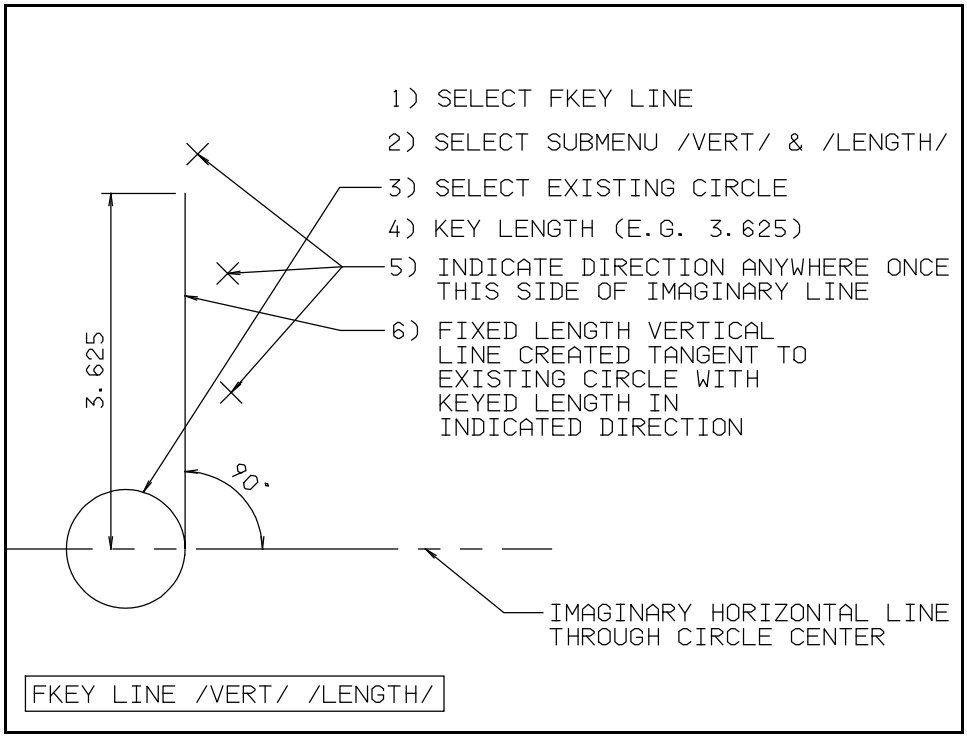

Figure 27 Example for a fixed length vertical line starting tangent to a circle with a keyed length and running in an indicated direction (NODE PATH A,M,N,P,R,S,T,U)

To create this line follow these steps:

STEP NO.	ACTION / RESULT	MENU PROMPT (BEFORE THE ACTION) (2nd line from top of screen)	NODE NO.
1	**SELECT Fkey LINE**		**A**
2	**SELECT submenu /VERT/ and /LENGTH/ (If they are not already underlined)**		**A**
3	**SELECT existing circle. The line will start tangent to this circle.**	**Key X,Y / Ind point / Sel element**	**N**
4	**KEY length (e.g. 3.625). This will be the length of the line.**	**Key length = 7.75000 / Sel any element (Note: Key length number reflects last number entered)**	**S**
5	**INDICATE direction once anywhere one side of imaginary line.**	**Ind direction**	**T**

STEP NO.	ACTION / RESULT	MENU PROMPT (BEFORE THE ACTION) (2nd line from top of screen)	NODE NO.
6	A fixed length vertical line is created tangent to an existing circle and extending for a keyed in length in the indicated direction.	Key X,Y / Ind point / Sel element / YN erase restore	U

6A) A VERTICAL CENTER LINE WHICH IS CENTERED ON A POINT:

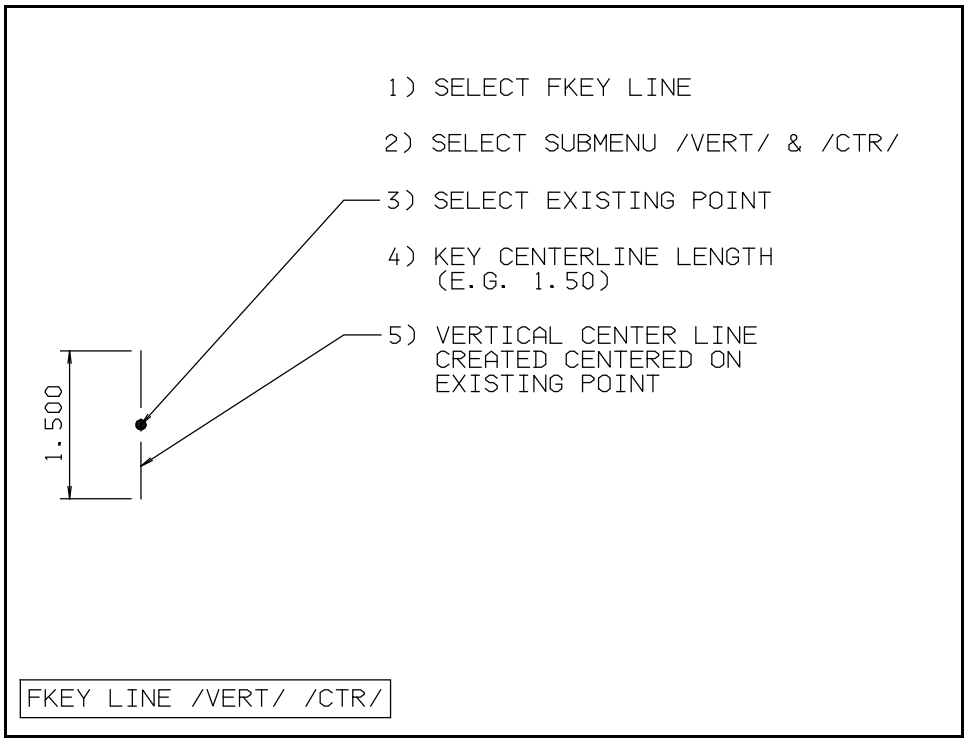

Figure 28 Example for a vertical center line centered on a point
(NODE PATH A,V,W,X,Z,AA,BB)

To create this line follow these steps:

STEP NO.	ACTION / RESULT	MENU PROMPT (BEFORE THE ACTION) (2nd line from top of screen)	NODE NO.
1	SELECT Fkey LINE		A
2	SELECT submenu /VERT/ and /CTR/ (If they are not already underlined)		A
3	SELECT existing point.	Key X,Y / Ind point / Sel element	W
4	KEY center line length (e.g. 1.50"). This will be the total length of the center line.	Key length = 3.12500 (Note: Key length number reflects last number entered)	AA
5	A vertical center line is created centered on an existing point.	Key X,Y / Ind point / Sel element	BB

FKey LINE

SUBMENU / VERT /

ADVANCED

SECTION

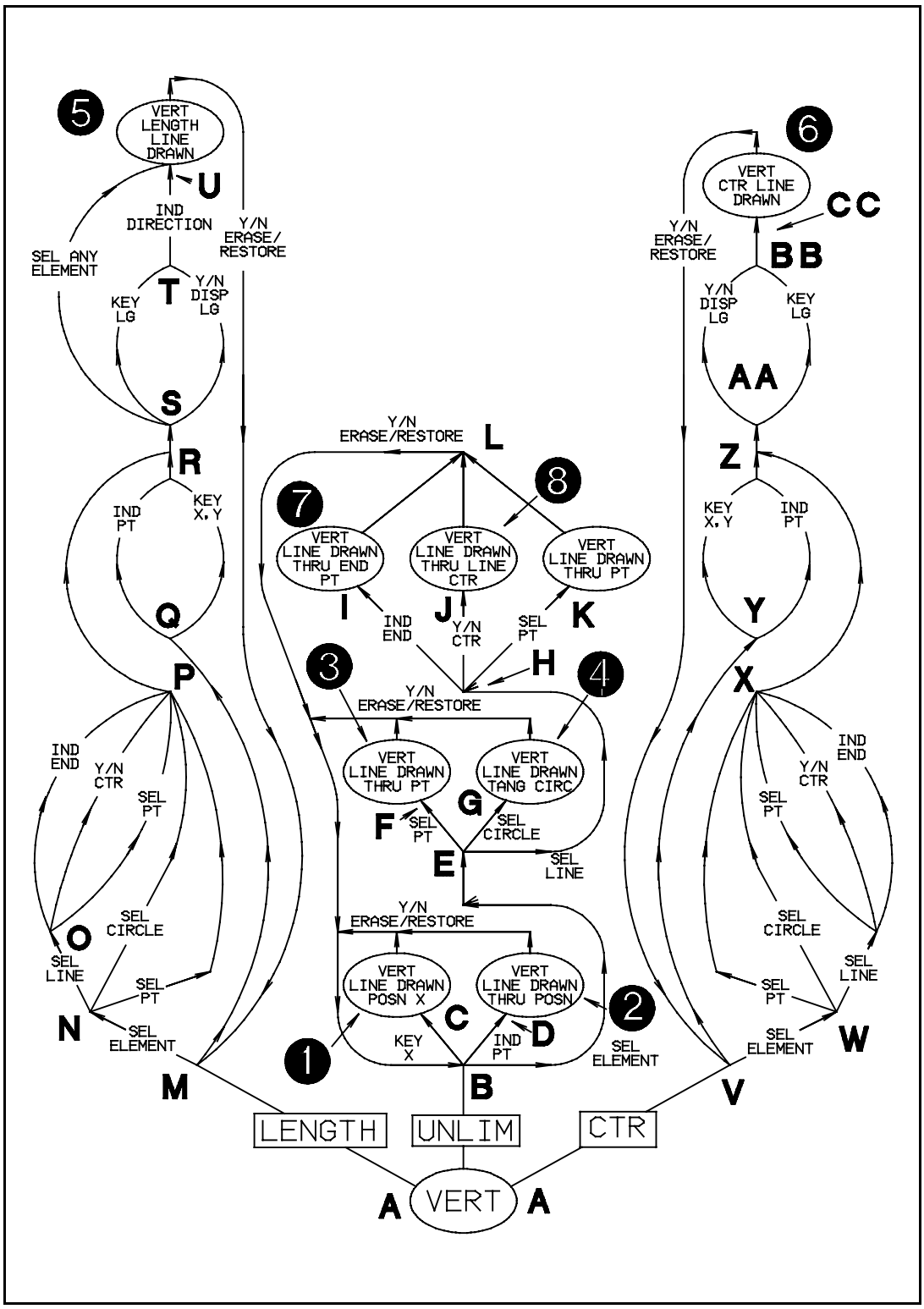

Figure 29 Advanced Road Map for Vertical Line

7) AN UNLIMITED LENGTH VERTICAL LINE DRAWN THROUGH THE END OF ANOTHER LINE:

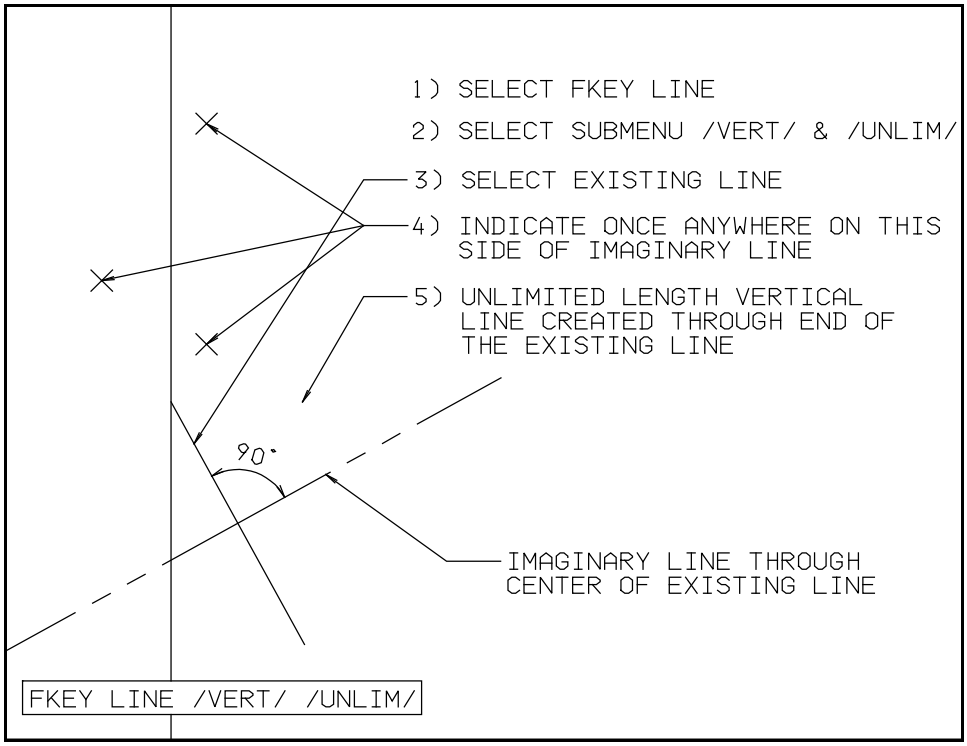

Figure 30 Example for an unlimited length vertical line drawn through the end point of another line (NODE PATH A,B,E,H,I)

To create this line follow these steps:

STEP NO.	ACTION / RESULT	MENU PROMPT (BEFORE THE ACTION) (2nd line from top of screen)	NODE NO.
1	SELECT Fkey LINE		A
2	SELECT submenu /VERT/ and /UNLIM/ (If they are not already underlined)		A
3	SELECT an existing line	Key X / Ind point / Sel element	E
4	INDICATE once anywhere on one side of the imaginary line	Ind end / YN center / Sel point	H
5	An unlimited length vertical line is created through the end of the existing line	Key X / Ind point / Sel element / YN erase-restore	I

8) AN UNLIMITED LENGTH VERTICAL LINE DRAWN THROUGH THE MIDDLE OF ANOTHER LINE:

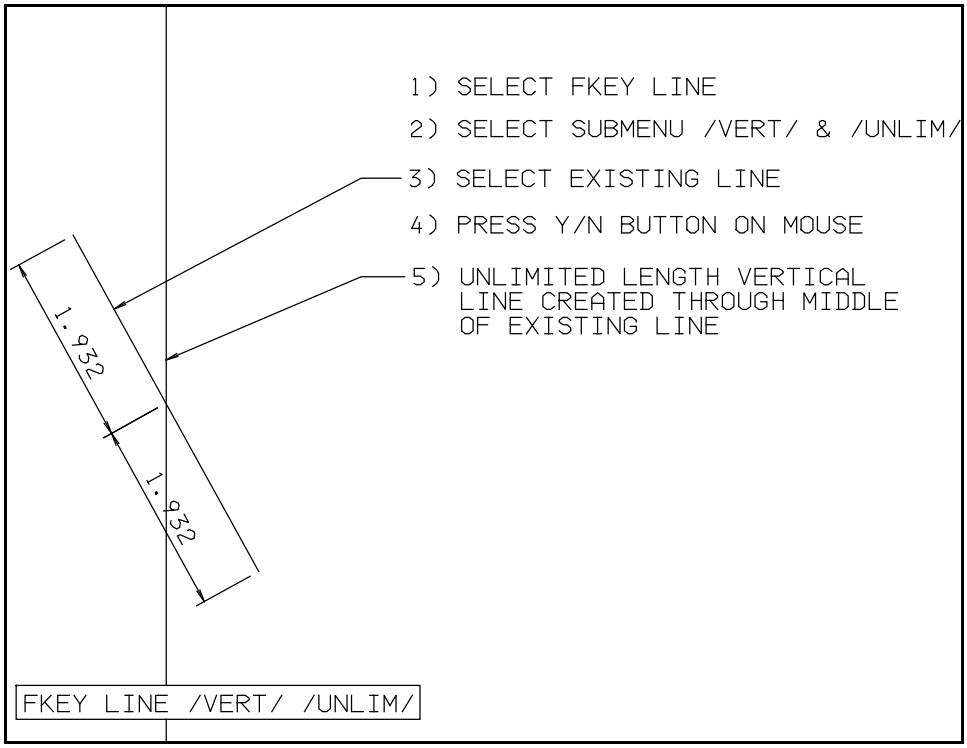

Figure 31 Example for an unlimited length vertical line drawn through the middle point of another line (NODE PATH A,B,E,H,J)

To create this line follow these steps:

STEP NO.	ACTION / RESULT	MENU PROMPT (BEFORE THE ACTION) (2nd line from top of screen)	NODE NO.
1	SELECT Fkey LINE		A
2	SELECT submenu /VERT/ and /UNLIM/ (If they are not already underlined)		A
3	SELECT an existing line	Key X / Ind point / Sel element	E
4	Press YN button on mouse	Ind end / YN center / Sel point	H
5	An unlimited length vertical line is created through the middle of the existing line	Key X / Ind point / Sel element / YN erase-restore	J

5D) A FIXED LENGTH VERTICAL LINE DRAWN THROUGH THE END POINT OF ANOTHER LINE:

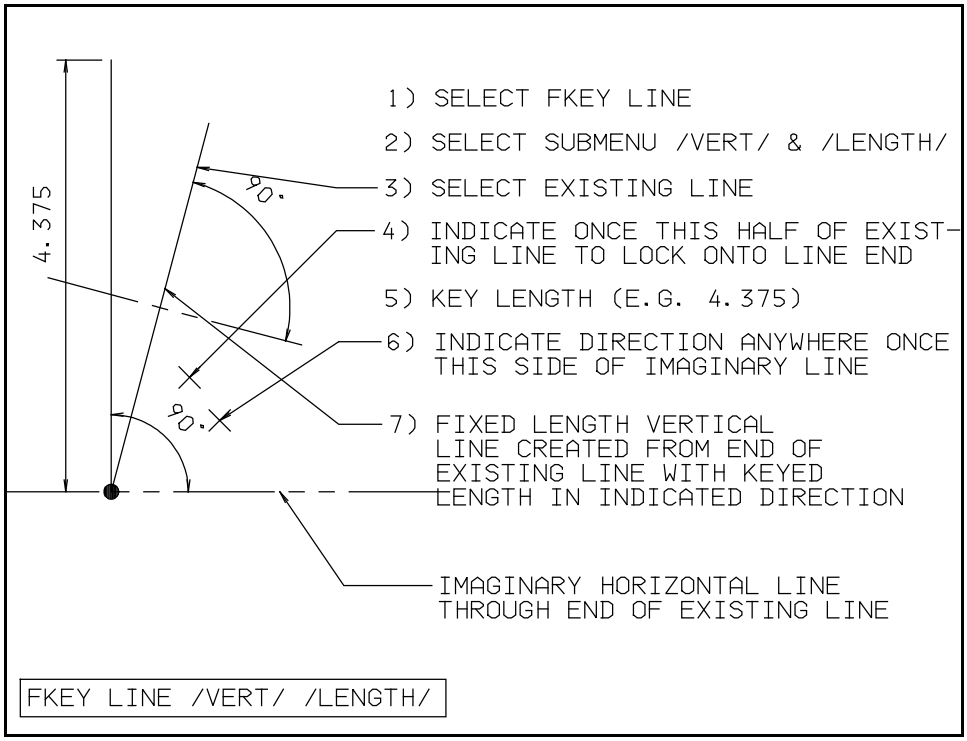

Figure 32 Example for a fixed length vertical line drawn through the end point of another line (NODE PATH A,M,N,O,P,R,T,U)

To create this line follow these steps:

STEP NO.	ACTION / RESULT	MENU PROMPT (BEFORE THE ACTION) (2nd line from top of screen)	NODE NO.
1	SELECT Fkey LINE		A
2	SELECT submenu /VERT/ and /LENGTH/ (If they are not already underlined)		A
3	SELECT an existing line	Key X,Y / Ind point / Sel element	N
4	INDICATE once one half of existing line to lock onto line end	Ind end / YN center / Sel point	O
5	KEY line length (e.g. 4.375)	Key length = 2.750 / Sel element (Note: The actual number displayed here will be the last number keyed in	S
6	INDICATE direction of fixed length line once anywhere one side of imaginary line	Ind direction	T

STEP NO.	ACTION / RESULT	MENU PROMPT (BEFORE THE ACTION) (2nd line from top of screen)	NODE NO.
7	A fixed length vertical line is created from the end of the existing line with the keyed length (4.375) in the indicated direction	Key X,Y / Ind point / Sel element / YN erase-restore	U

5E) A FIXED LENGTH VERTICAL LINE DRAWN THROUGH THE MIDDLE OF ANOTHER LINE:

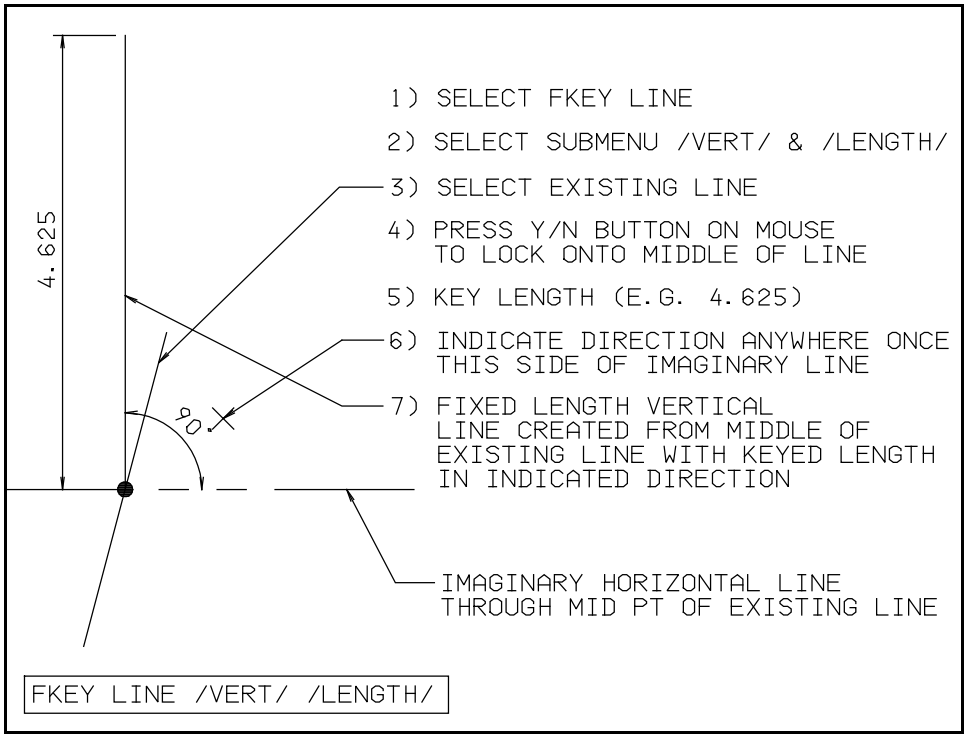

Figure 33 Example for a fixed length vertical line drawn through the middle point of another line (NODE PATH A,M,N,O,P,R,S,T,U)

To create this line follow these steps:

STEP NO.	ACTION / RESULT	MENU PROMPT (BEFORE THE ACTION) (2nd line from top of screen)	NODE NO.
1	**SELECT Fkey LINE**		**A**
2	**SELECT submenu /VERT/ and /LENGTH/ (If they are not already underlined)**		**A**
3	**SELECT existing line**	**Key X,Y / Ind point / Sel element**	**N**
4	**PRESS YN button on mouse to lock onto the middle of the line**	**Ind end / YN center / Sel point**	**O**
5	**KEY line length (e.g. 4.625)**	**Key length = 6.3125 / Sel element (Note: The actual number displayed here will reflect the last number keyed in)**	**S**
6	**INDICATE direction anywhere once one side of imaginary line.**	**Ind direction**	**T**

STEP NO.	ACTION / RESULT	MENU PROMPT (BEFORE THE ACTION) (2nd line from top of screen)	NODE NO.
7	A fixed length vertical line is created from the middle of the existing line with the keyed length (4.625") in the indicated direction	Key X,Y / Ind point / Sel element / YN erase-restore	U

6B) A VERTICAL CENTER LINE DRAWN THROUGH THE END OF ANOTHER LINE:

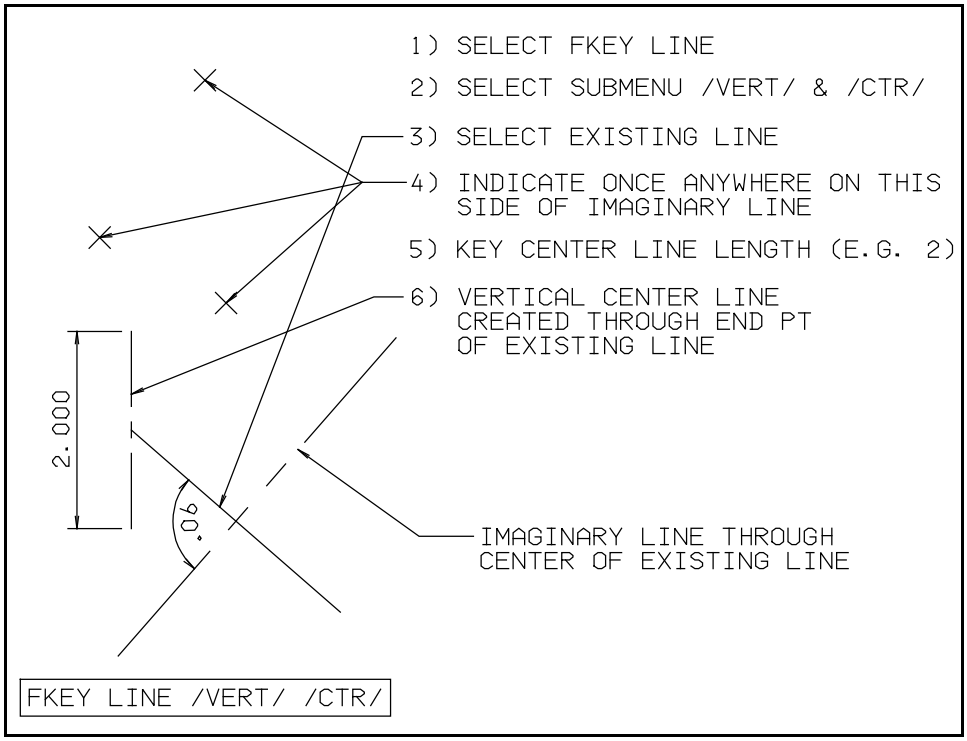

Figure 34 Example for a vertical center line drawn through the end point of another line (NODE PATH A,V,W,X,Z,AA,BB)

To create this line follow these steps:

STEP NO.	ACTION / RESULT	MENU PROMPT (BEFORE THE ACTION) (2nd line from top of screen)	NODE NO.
1	SELECT Fkey LINE.		A
2	SELECT submenu /VERT/ and /CTR/ (If they are not already underlined).		A
3	SELECT an existing line.	Key X,Y / Ind point / Sel element	W
4	INDICATE once anywhere on one side of the imaginary line.	Ind end / YN center / Sel point	W
5	KEY center line length (e.g. 2 for 2") This is the overall length of the center line.	Key length = 2.000 / Sel any element (Note: The actual number displayed here will be the last number keyed in)	AA
6	A vertical center line is created through the end of the existing line.	Key X,Y / Ind point / Sel element / YN erase-restore	CC

6C) A VERTICAL CENTER LINE DRAWN THROUGH THE MIDDLE OF ANOTHER LINE :

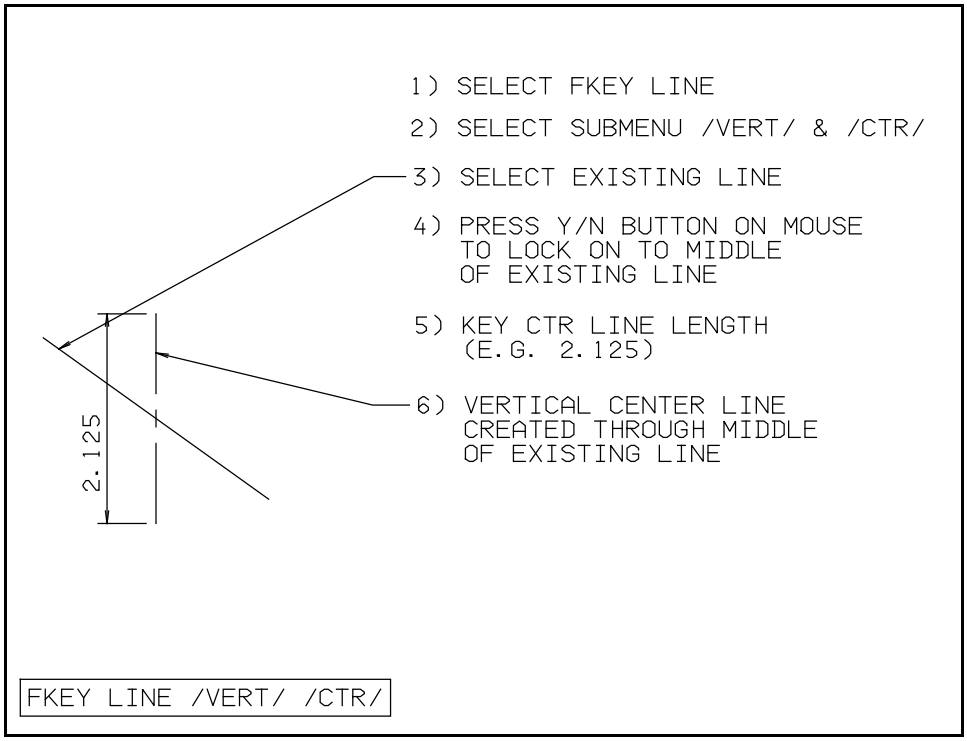

Figure 35 Example for a vertical center line drawn through the middle point of another line (NODE PATH A,V,W,X,Z,AA,BB)

To create this line follow these steps:

STEP NO.	ACTION / RESULT	MENU PROMPT (BEFORE THE ACTION) (2nd line from top of screen)	NODE NO.
1	SELECT Fkey LINE		A
2	SELECT submenu /VERT/ and /CTR/ (If they are not already underlined)		A
3	SELECT existing line.	Key X,Y / Ind point / Sel element	W
4	PRESS the YN button on the mouse to lock onto the middle of the existing line.	Ind end / YN center / Sel point	W
5	KEY the center line length (e.g. 2.125)	Key length = 2.250 / Sel any element (Note: The actual number displayed here will be the last number keyed in)	AA
6	A vertical center line is created through the middle of the existing line	Key X,Y / Ind point / Sel element / YN erase-restore	CC

All menus in Micro CADAM are intelligent. They anticipate your actions wherever possible. The results depend on the sequence that the **SELECT, INDICATE, KEY** and **Y/N** keys are pressed. This is summarized for FKey LINE / VERT / and shown in chart form below:

FKEY LINE /VERT/ ACTION SUMMARY

LINE NO.	TO CREATE	1ST ACTION	2ND ACTION	3RD ACTION	4TH ACTION	NODEPATH
BEGINNER SECTION						
1	An unlimited length vertical line drawn at elevation Y	Key X				A,B,C
2	An unlimited length vertical line drawn at indicated locations	IND position				A,B,D
3	An unlimited length vertical line drawn through a point	SEL Pt				A,C,D,E,F
4	An unlimited length vertical line drawn tangent to a circle	SEL Circle				A,B,E,G
5A	A fixed length vertical line starting at a point with a keyed length in an indicated direction	SEL Pt	KEY line length	IND direction		A,M,N,P,R,S, T,U
5B	A fixed length vertical line starting at a point and continuing until it crosses another element	SEL Pt	SEL element			A,M,N,P,R,S, U
5C	A fixed length vertical line starting tangent to a circle with a keyed length and running in an indicated direction	SEL Circle	KEY line length	IND direction		A,M,N,P,R,S, T,U
6A	A vertical center line which is centered on a point	SEL Pt	KEY center line length			A,V,W,X,Z,A A,BB
ADVANCED SECTION						
7	An unlimited length vertical line drawn through the end of another line	SEL Line	IND End			A,B,E,H,I
8	An unlimited length vertical line drawn through the middle of another line	SEL Line	Y/N Center			A,B,E,H,J
5D	A fixed length line drawn through the end point of another line	SEL Line	IND End	KEY Line length	IND Direction	A,M,N,O,P,R, T,U
5E	A fixed length vertical line drawn through the middle of another line	SEL Line	Y/N Center	KEY Line length	IND Direction	A,M,N,O,P,R, S,T,U
6B	A vertical center line drawn through the end of another line	SEL Line	IND end	KEY center line length		A,V,W,X,Z,A A,BB
6C	A vertical center line drawn through the middle of another line	SEL Line	Y/N Center	KEY center line length		A,V,W,X,Z,A A,BB

FKey LINE

SUBMENU / PARAL /

Fkey LINE submenu /LINE/ allows you to draw lines. Each line has been assigned a line number. The same line number is also referenced on the Line Road Map and the Action Summary. The different ways to draw parallel lines are divided into beginner and advanced sections and are listed with page numbers as follows:

BEGINNER: (See Figure 36 on Page 12-66 for the Beginner Road Map for Parallel Line)

PARAL LINE NO.	DESCRIPTION	PAGE NO.
1	An unlimited length parallel line drawn through position X,Y	12-67
2	An unlimited length parallel line drawn through an indicated location	12-68
3	An unlimited length parallel line drawn through a point	12-69
4	An unlimited length parallel line drawn tangent to a circle	12-70
5A	A fixed length parallel line starting at a point with a keyed length in an indicated direction	12-71
5B	A fixed length parallel line starting at a point and continuing until it crosses another element	12-73
5C	A fixed length parallel line starting tangent to a circle with a keyed length in an indicated direction	12-75
6A	A parallel center line which is centered on a point	12-77

ADVANCED: (See Figure 45 on Page 12-80 for the Advanced Road Map for Parallel Line)

PARAL LINE NO.	DESCRIPTION	PAGE NO.
7	An unlimited length parallel line drawn through the end of another line	12-81
8	An unlimited length parallel line drawn through the middle of another line	12-82
5D	A fixed length parallel line drawn through the end of another line	12-83
5E	A fixed length parallel line drawn through the middle of another line	12-85
6B	A parallel center line drawn through the end of another line	12-87
6C	A parallel center line drawn through the middle of another line	12-89

FKey LINE

SUBMENU / PARAL /

BEGINNER

SECTION

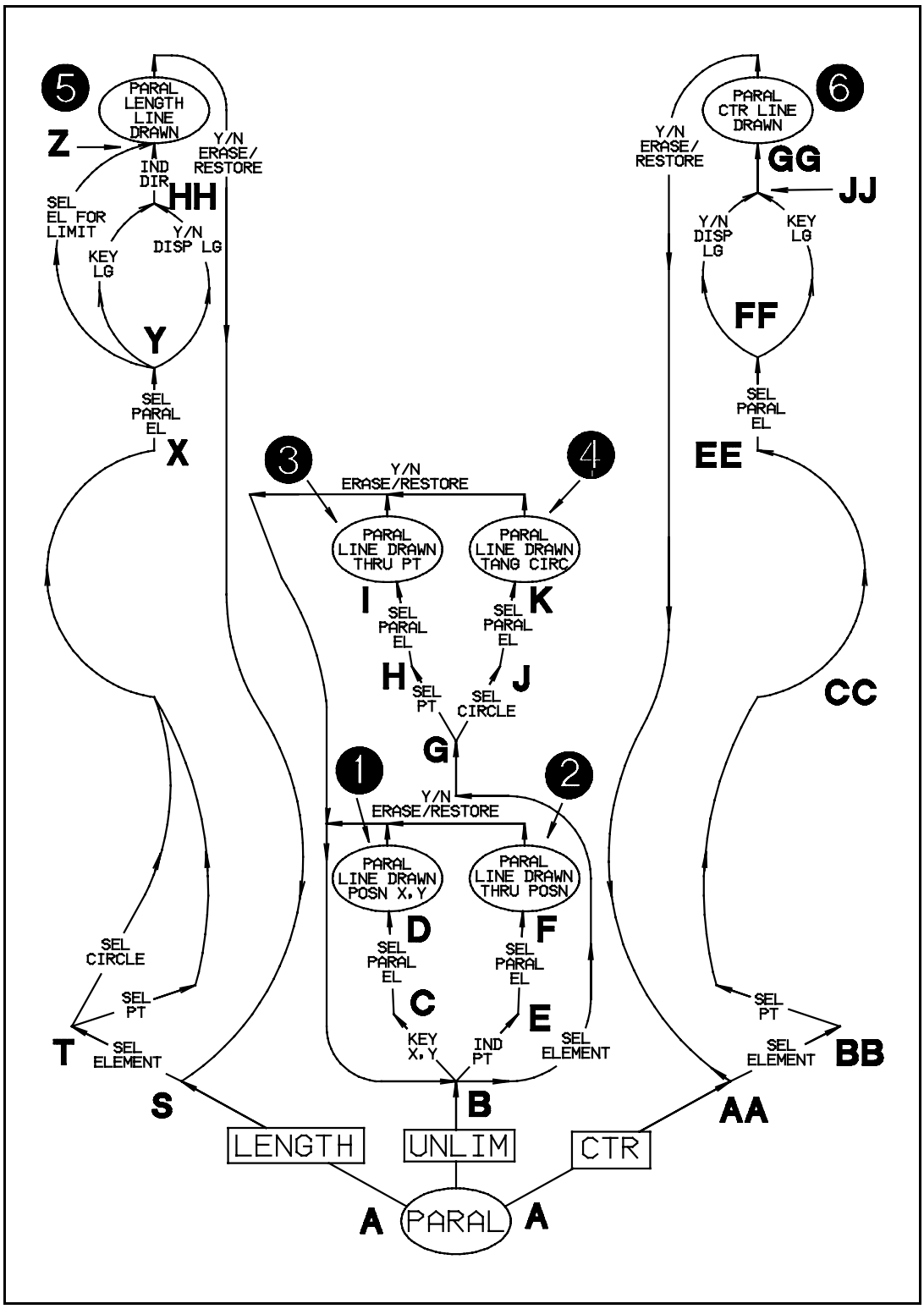

Figure 36 Beginner Road Map for Parallel Line

1) AN UNLIMITED LENGTH PARALLEL LINE DRAWN THROUGH POSITION X,Y:

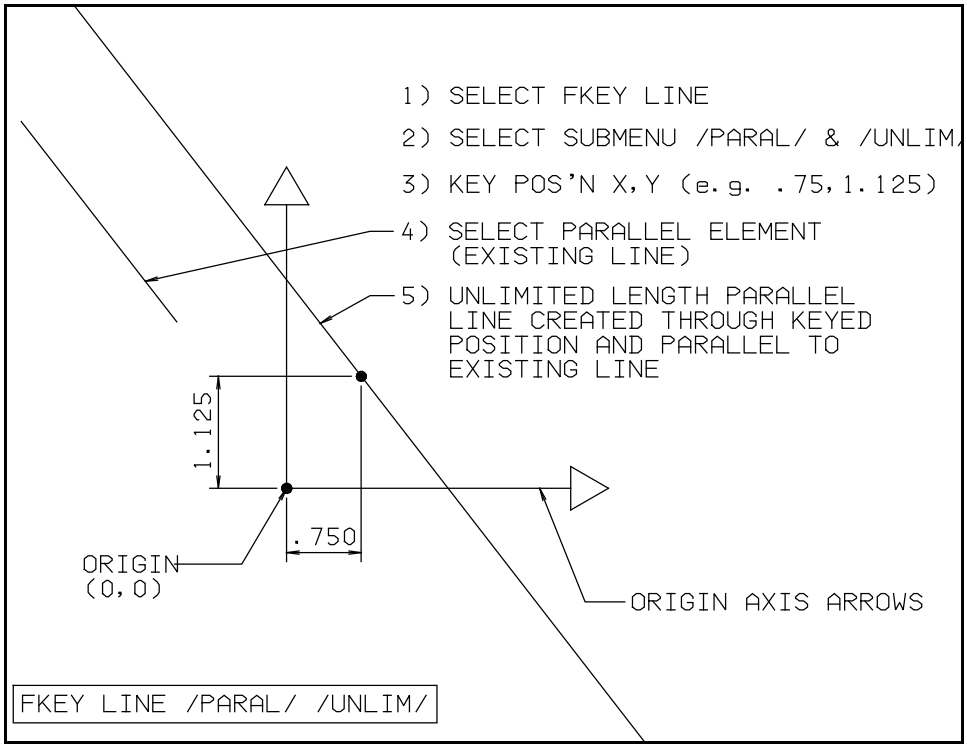

Figure 37 Example for an unlimited length parallel line drawn through X,Y (NODE PATH A,B,C,D)

To create this line follow these steps:

STEP NO.	ACTION / RESULT	MENU PROMPT (BEFORE THE ACTION) (2nd line from top of screen)	NODE NO.
1	SELECT Fkey LINE		A
2	SELECT submenu /PARAL/ and /UNLIM/ (If they are not already underlined)		A
3	KEY the position the parallel line will go through (e.g. .75,1.125)	Key X,Y / Ind point / Sel element	B
4	SELECT an existing line that the new line will be parallel to	Sel parallel element	C
5	An unlimited length parallel line is created through the keyed position and parallel to the line selected in step No. 4.	Key X,Y / Ind point / Sel element / YN erase-restore	D

2) AN UNLIMITED LENGTH PARALLEL LINE DRAWN THROUGH AN INDICATED LOCATION:

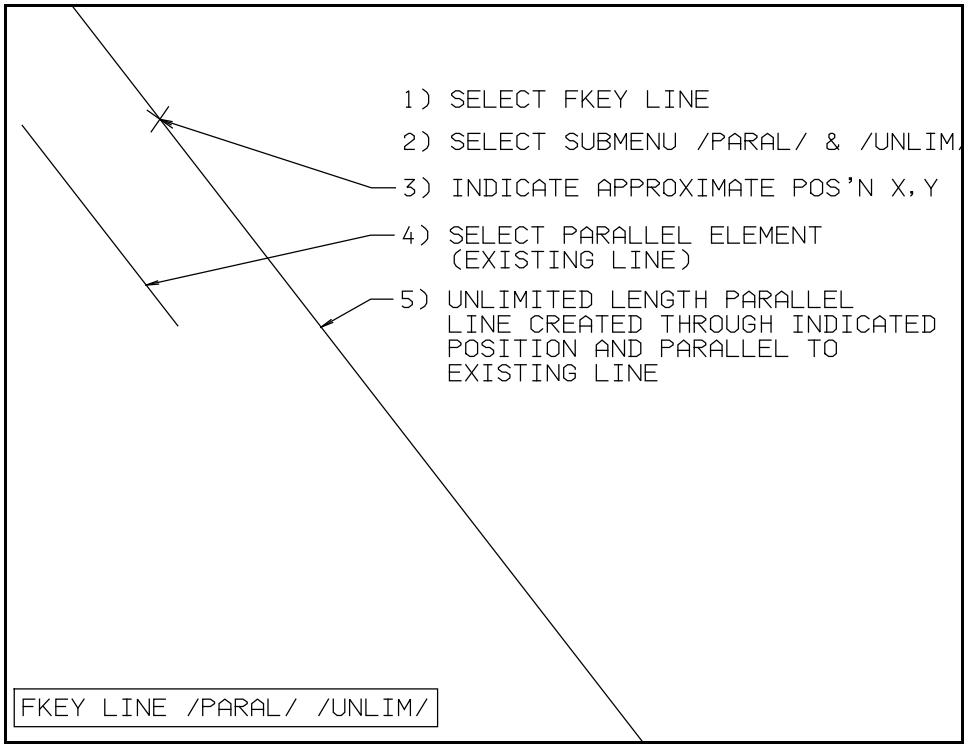

Figure 38 Example for an unlimited length parallel line drawn at an indicated position (NODE PATH A,B,E,F)

To create this line follow these steps:

STEP NO.	ACTION / RESULT	MENU PROMPT (BEFORE THE ACTION) (2nd line from top of screen)	NODE NO.
1	SELECT Fkey LINE		A
2	SELECT submenu /PARAL/ and /UNLIM/ (If they are not already underlined)		A
3	INDICATE approximate location	Key X,Y / Ind point / Sel element	B
4	SELECT an existing line which the new line will be parallel to	Sel parallel element	E
5	An unlimited length parallel line is created through the INDICATED position and parallel to the line selected in step No. 4.	Key X,Y / Ind point / Sel element / YN erase-restore	F

3) AN UNLIMITED LENGTH PARALLEL LINE DRAWN THROUGH A POINT:

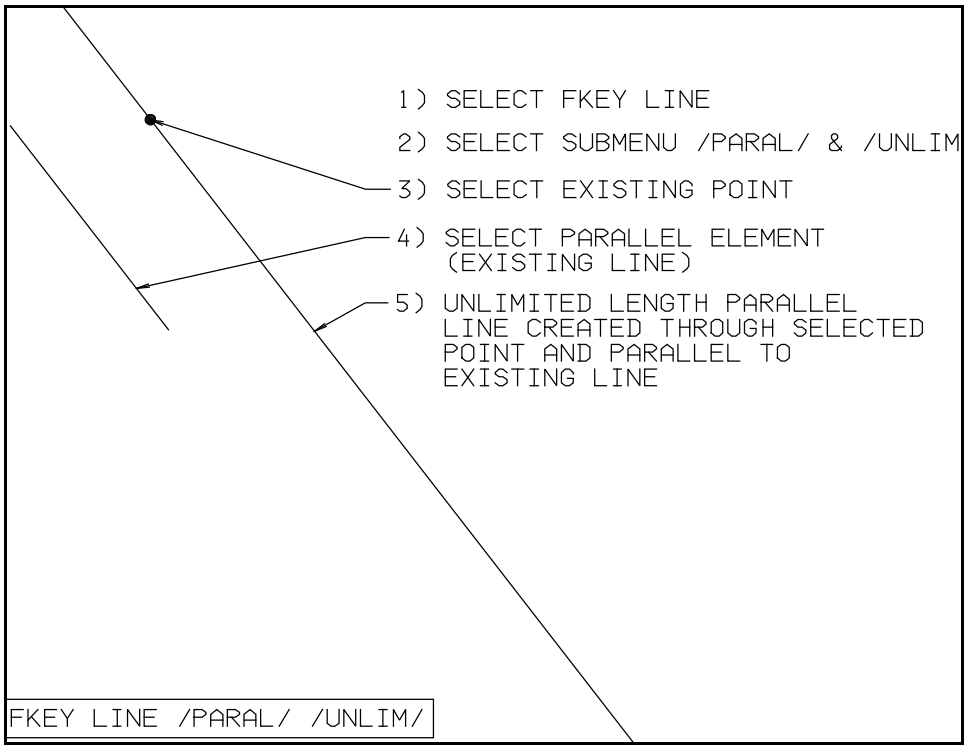

Figure 39 Example for an unlimited length parallel line drawn through a point (NODE PATH A,B,G,H,I)

To create this line follow these steps:

STEP NO.	ACTION / RESULT	MENU PROMPT (BEFORE THE ACTION) (2nd line from top of screen)	NODE NO.
1	SELECT Fkey LINE		A
2	SELECT submenu /PARAL/ and /UNLIM/ (If they are not already underlined)		A
3	SELECT existing point	Key X,Y / Ind point / Sel element	G
4	SELECT an existing line which the new line will be parallel to	Sel parallel element	H
5	An unlimited length parallel line is created through the SELECTED point and parallel to the line selected in step No. 4.	Key X,Y / Ind point / Sel element / YN erase-restore	I

4) AN UNLIMITED LENGTH PARALLEL LINE DRAWN TANGENT TO A CIRCLE:

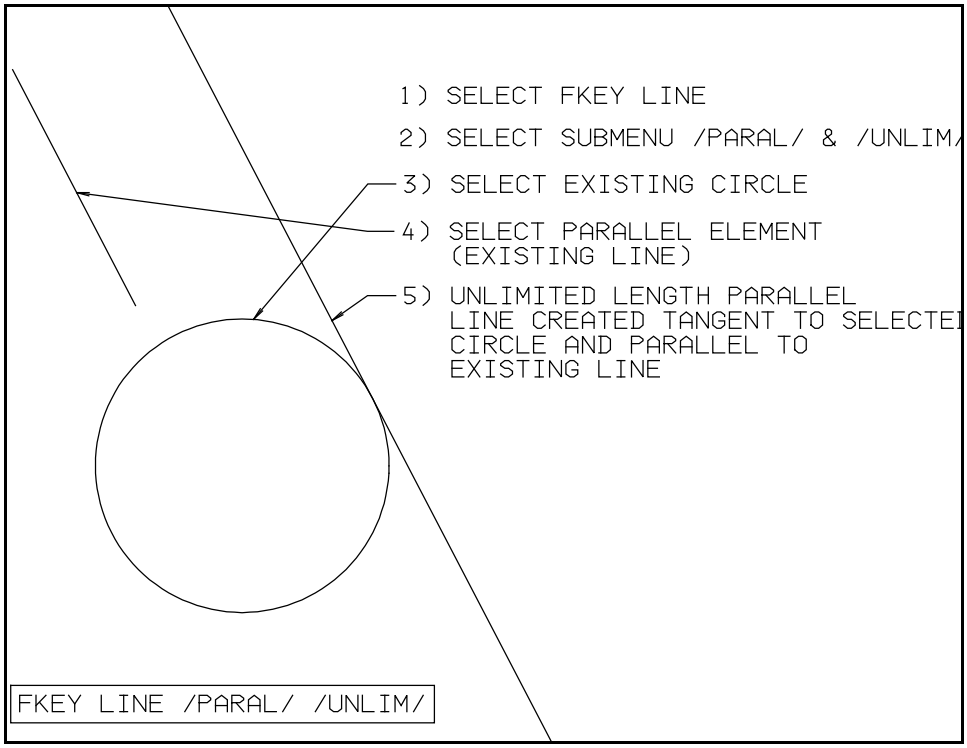

Figure 40 Example for an unlimited length parallel line drawn tangent to a circle (NODE PATH A,B,G,J,K)

To create this line follow these steps:

STEP NO.	ACTION / RESULT	MENU PROMPT (BEFORE THE ACTION) (2nd line from top of screen)	NODE NO.
1	SELECT Fkey LINE		A
2	SELECT submenu /PARAL/ and /UNLIM/ (If they are not already underlined)		A
3	SELECT right half of existing circle	Key X,Y / Ind point / Sel element	G
4	SELECT an existing line which the new line will be parallel to	Sel parallel element	J
5	An unlimited length parallel line is created tangent to the right half of the selected circle and parallel to the line selected in step No. 4.	Key X,Y / Ind point / Sel element / YN erase-restore	K

5A) A FIXED LENGTH PARALLEL LINE STARTING AT A POINT WITH A KEYED LENGTH IN AN INDICATED DIRECTION:

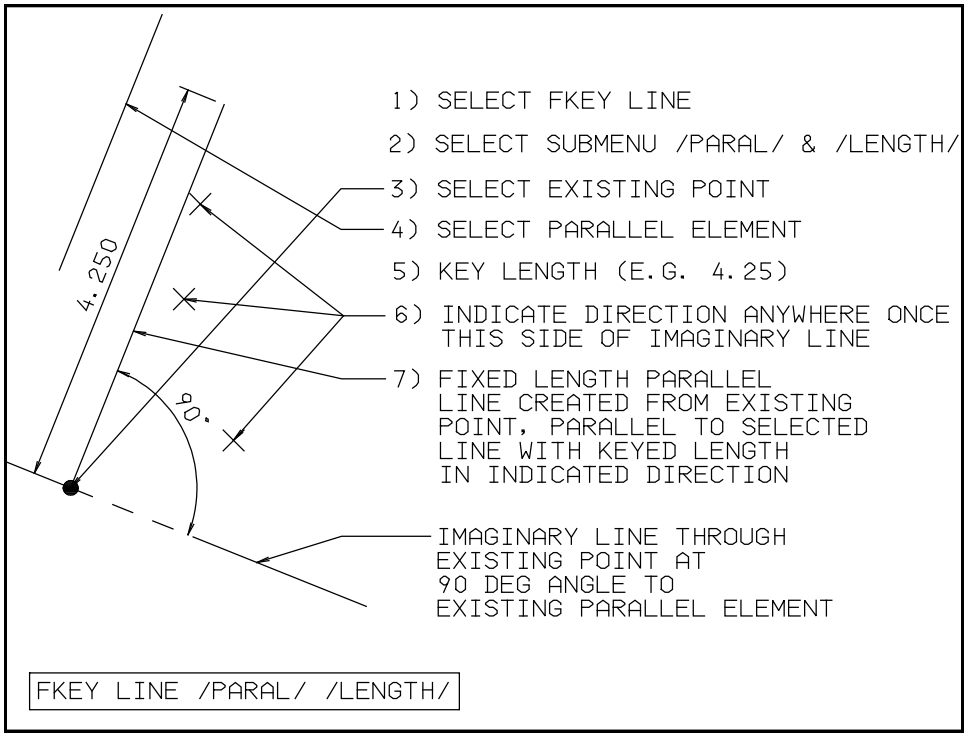

Figure 41 Example for a fixed length parallel line starting at a point with a keyed length in an indicated direction (NODE PATH A,S,T,V,X,Y,HH,Z)

To create this line follow these steps:

STEP NO.	ACTION / RESULT	MENU PROMPT (BEFORE THE ACTION) (2nd line from top of screen)	NODE NO.
1	SELECT Fkey LINE		A
2	SELECT submenu /PARAL/ and /LENGTH/ (If they are not already underlined)		A
3	SELECT existing point. This is the starting point for the line.	Key X,Y / Ind point / Sel element	T
4	SELECT an existing line which the new line will be parallel to	Sel parallel element	X
5	KEY length of line (e.g. 4.25)	Key length = 5.750 / Sel element for limit (Note: Key length number reflects the last number entered)	Y

STEP NO.	ACTION / RESULT	MENU PROMPT (BEFORE THE ACTION) (2nd line from top of screen)	NODE NO.
6	INDICATE direction once anywhere one side of the imaginary line. This determines the direction the line will go.	Ind direction	HH
7	A fixed length parallel line is created from the existing point. Its' length is the keyed in length, its' direction is in the indicated direction and it runs parallel to the line selected in step No. 4.	Key X,Y / Ind point / Sel element / YN erase-restore	Z

5B) A FIXED LENGTH PARALLEL LINE STARTING AT A POINT AND CONTINUING UNTIL IT CROSSES ANOTHER ELEMENT :

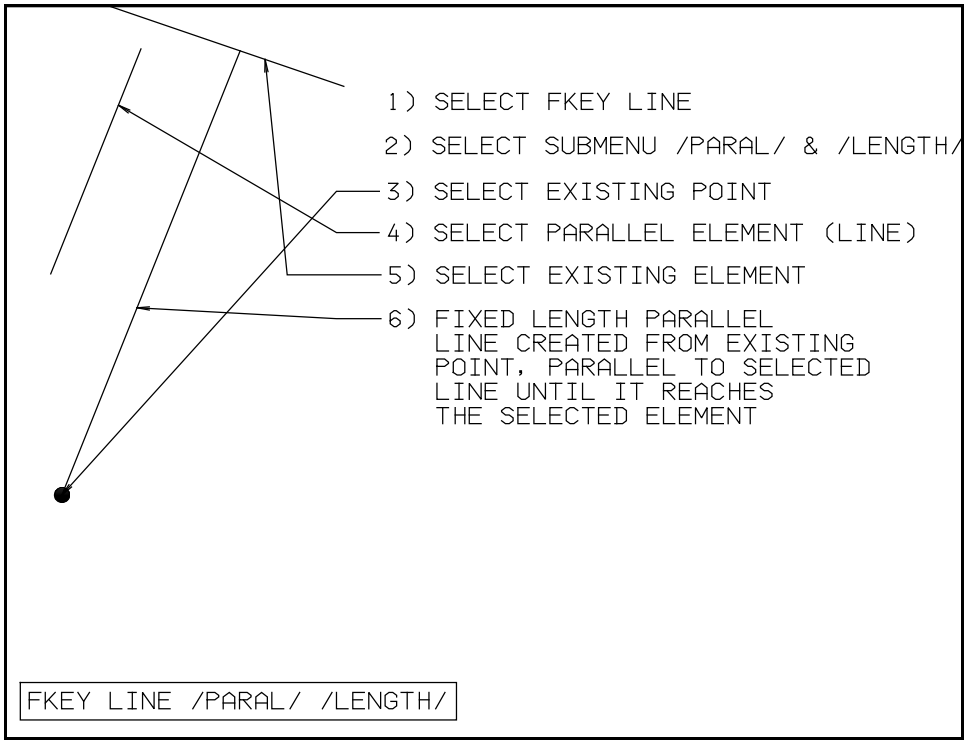

Figure 42 Example for a fixed length parallel line starting at a point and running until it crosses another element (NODE PATH A,S,T,V,X,Y,Z)

To create this line follow these steps:

STEP NO.	ACTION / RESULT	MENU PROMPT (BEFORE THE ACTION) (2nd line from top of screen)	NODE NO.
1	**SELECT Fkey LINE**		**A**
2	**SELECT submenu /PARAL/ and /LENGTH/ (If they are not already underlined)**		**A**
3	**SELECT existing point. This is the starting point for the line.**	**Key X,Y / Ind point / Sel element**	**T**
4	**SELECT an existing line which the new line will be parallel to**	**Sel parallel element**	**X**
5	**SELECT existing element. The line will end at this element.**	**Key length = 1.3125 / Sel any element (Note: Key length number reflects the last number entered)**	**Y**

STEP NO.	ACTION / RESULT	MENU PROMPT (BEFORE THE ACTION) (2nd line from top of screen)	NODE NO.
6	A fixed length parallel line is created starting at the existing point, runs until it crosses the selected element and is parallel to the line selected in step No. 4.	Key X,Y / Ind point / Sel element / YN erase-restore	Z

5C) A FIXED LENGTH PARALLEL LINE STARTING TANGENT TO A CIRCLE WITH A KEYED LENGTH AND RUNNING IN AN INDICATED DIRECTION:

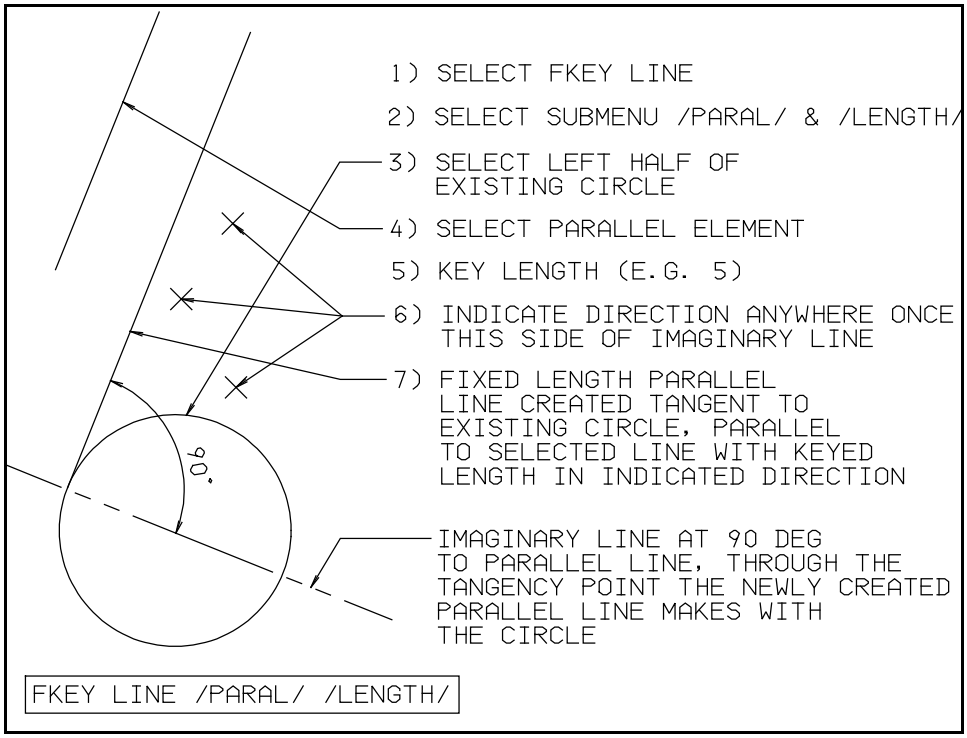

Figure 43 Example for a fixed length parallel line starting tangent to a circle with a keyed length and running in an indicated direction (NODE PATH A,S,T,V,X,Y,HH,Z)

To create this line follow these steps:

STEP NO.	ACTION / RESULT	MENU PROMPT (BEFORE THE ACTION) (2nd line from top of screen)	NODE NO.
1	**SELECT Fkey LINE**		**A**
2	**SELECT submenu /PARAL/ and /LENGTH/ (If they are not already underlined)**		**A**
3	**SELECT existing circle. The line will start tangent to this circle on the side of the circle selected**	**Key X,Y / Ind point / Sel element**	**T**
4	**SELECT an existing line which the new line will be parallel to**	**Sel parallel element**	**X**
5	**KEY length (e.g. 5). This will be the length of the line.**	**Key length = 3.75000 / Sel any element (Note: Key length number reflects last number entered)**	**Y**
6	**INDICATE direction once anywhere one side of imaginary line.**	**Ind direction**	**HH**

STEP NO.	ACTION / RESULT	MENU PROMPT (BEFORE THE ACTION) (2nd line from top of screen)	NODE NO.
7	A fixed length parallel line is created tangent to an existing circle and extending for a keyed in length in the indicated direction and parallel to the line selected in step No. 4.	Key X,Y / Ind point / Sel element / YN erase restore	Z

6A) A PARALLEL CENTER LINE WHICH IS CENTERED ON A POINT:

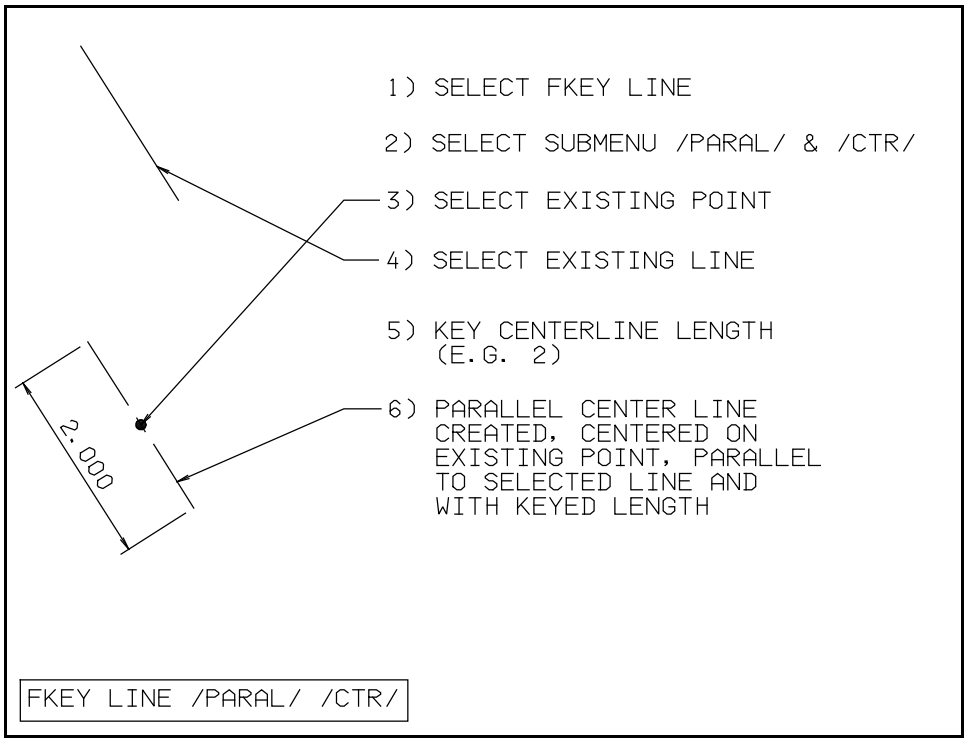

Figure 44 Example for a parallel center line centered on a point (NODE PATH A,AA,BB,CC,EE,FF,GG)

To create this line follow these steps:

STEP NO.	ACTION / RESULT	MENU PROMPT (BEFORE THE ACTION) (2nd line from top of screen)	NODE NO.
1	SELECT Fkey LINE		A
2	SELECT submenu /PARAL/ and /CTR/ (If they are not already underlined)		A
3	SELECT existing point.	Key X,Y / Ind point / Sel element	BB
4	SELECT an existing line which the new line will be parallel to	Sel parallel element	EE
5	KEY center line length (e.g. 2). This will be the total length of the center line.	Key length = 4.06250 (Note: Key length number reflects last number entered)	FF
6	A parallel center line is created centered on an existing point and parallel to the line selected in step No. 4	Key X,Y / Ind point / Sel element	GG

FKey LINE

SUBMENU / PARAL /

ADVANCED

SECTION

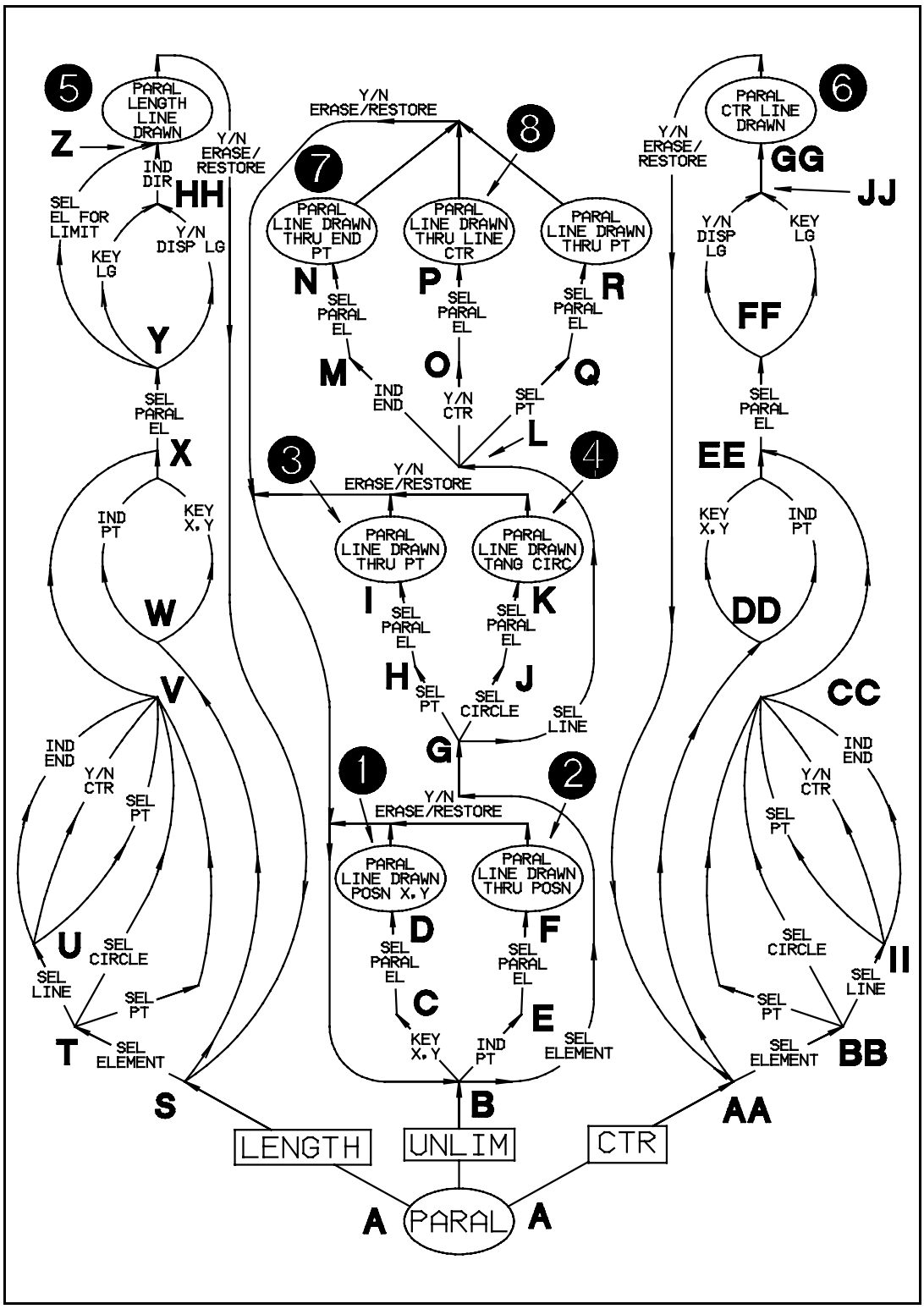

Figure 45 Advanced Road Map for Parallel Line

7) AN UNLIMITED LENGTH PARALLEL LINE DRAWN THROUGH THE END OF ANOTHER LINE:

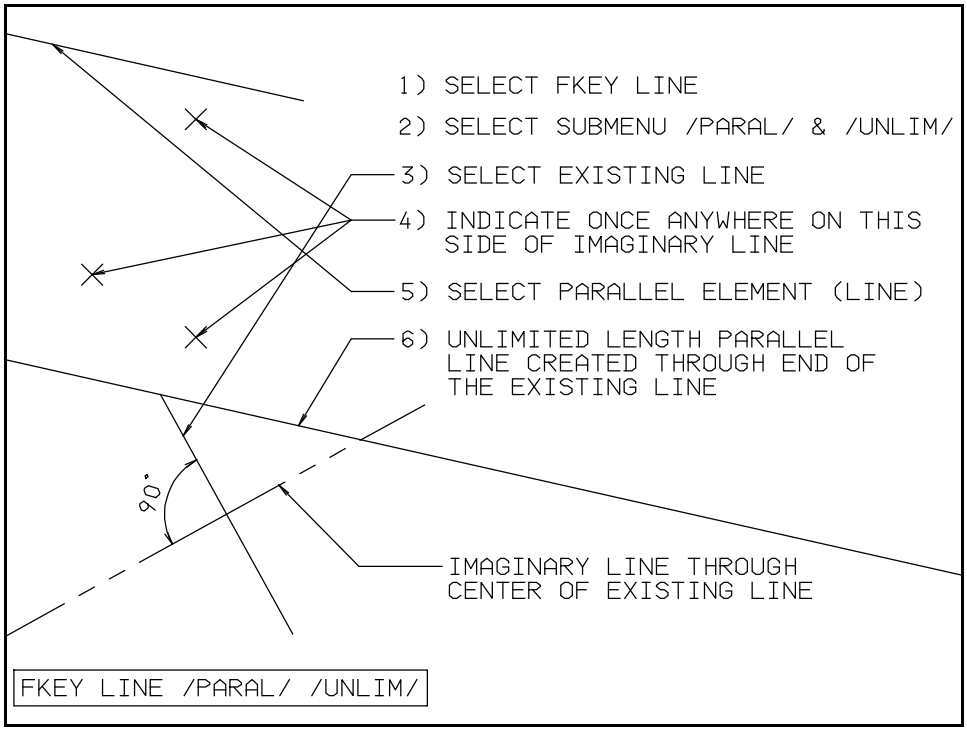

Figure 46 Example for an unlimited length parallel line drawn through the end point of another line (NODE PATH A,B,G,L,M,N)

To create this line follow these steps:

STEP NO.	ACTION / RESULT	MENU PROMPT (BEFORE THE ACTION) (2nd line from top of screen)	NODE NO.
1	SELECT Fkey LINE		A
2	SELECT submenu /PARAL/ and /UNLIM/ (If they are not already underlined)		A
3	SELECT an existing line	Key X,Y / Ind point / Sel element	G
4	INDICATE once anywhere on one side of the imaginary line	Ind end / YN center / Sel point	L
5	SELECT an existing line which the new line will be parallel to	Sel parallel element	M
6	An unlimited length parallel line is created through the end of the existing line and parallel to the line selected in step No. 5.	Key X,Y / Ind point / Sel element / YN erase-restore	N

8) AN UNLIMITED LENGTH PARALLEL LINE DRAWN THROUGH THE MIDDLE OF ANOTHER LINE:

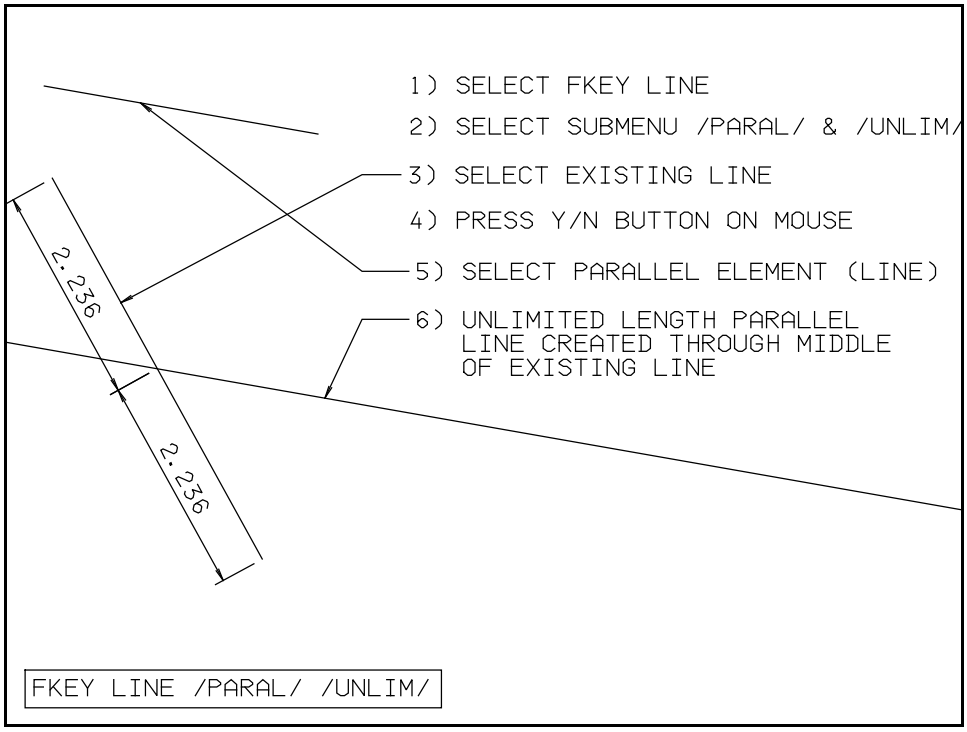

Figure 47 Example for an unlimited length parallel line drawn through the middle point of another line (NODE PATH A,B,G,L,O,P)

To create this line follow these steps:

STEP NO.	ACTION / RESULT	MENU PROMPT (BEFORE THE ACTION) (2nd line from top of screen)	NODE NO.
1	SELECT Fkey LINE		A
2	SELECT submenu /PARAL/ and /UNLIM/ (If they are not already underlined)		A
3	SELECT an existing line	Key X,Y / Ind point / Sel element	B
4	Press YN button on mouse	Ind end / YN center / Sel point	L
5	SELECT an existing line which the new line will be parallel to	Sel parallel element	O
6	An unlimited length parallel line is created through the middle of the existing line and parallel to the line selected in step No. 5.	Key X,Y / Ind point / Sel element / YN erase-restore	P

5D) A FIXED LENGTH PARALLEL LINE DRAWN THROUGH THE END POINT OF ANOTHER LINE:

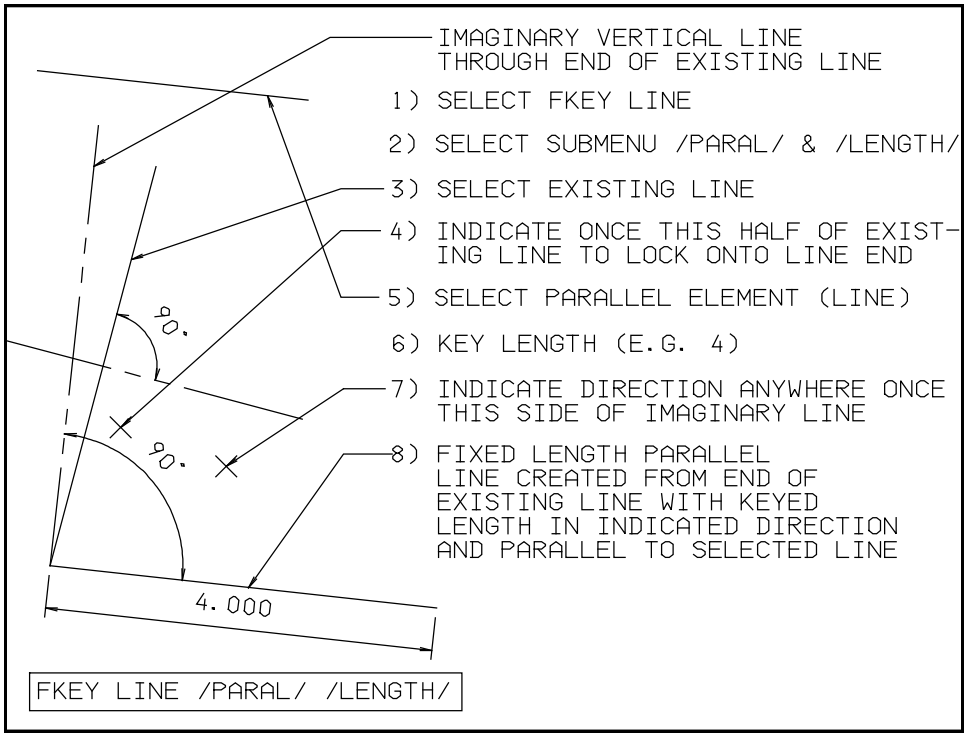

Figure 48 Example for a fixed length parallel line drawn through the end point of another line (NODE PATH A,S,T,U,V,X,Y,HH,Z)

To create this line follow these steps:

STEP NO.	ACTION / RESULT	MENU PROMPT (BEFORE THE ACTION) (2nd line from top of screen)	NODE NO.
1	**SELECT Fkey LINE**		**A**
2	**SELECT submenu /PARAL/ and /LENGTH/ (If they are not already underlined)**		**A**
3	**SELECT an existing line**	**Key X,Y / Ind point / Sel element**	**T**
4	**INDICATE once one half of existing line to lock onto line end**	**Ind end / YN center / Sel point**	**U**
5	**SELECT an existing line which the new line will be parallel to**	**Sel parallel element**	**X**
6	**KEY line length (e.g. 4)**	**Key length = 1.750 / Sel element (Note: The actual number displayed here will be the last number keyed in**	**Y**

STEP NO.	ACTION / RESULT	MENU PROMPT (BEFORE THE ACTION) (2nd line from top of screen)	NODE NO.
7	INDICATE direction of fixed length line once anywhere one side of imaginary line	Ind direction	HH
8	A fixed length parallel line is created from the end of the existing line with the keyed length (4) in the indicated direction and parallel to the line selected in step No. 5.	Key X,Y / Ind point / Sel element / YN erase-restore	Z

5E) A FIXED LENGTH PARALLEL LINE DRAWN THROUGH THE MIDDLE OF ANOTHER LINE:

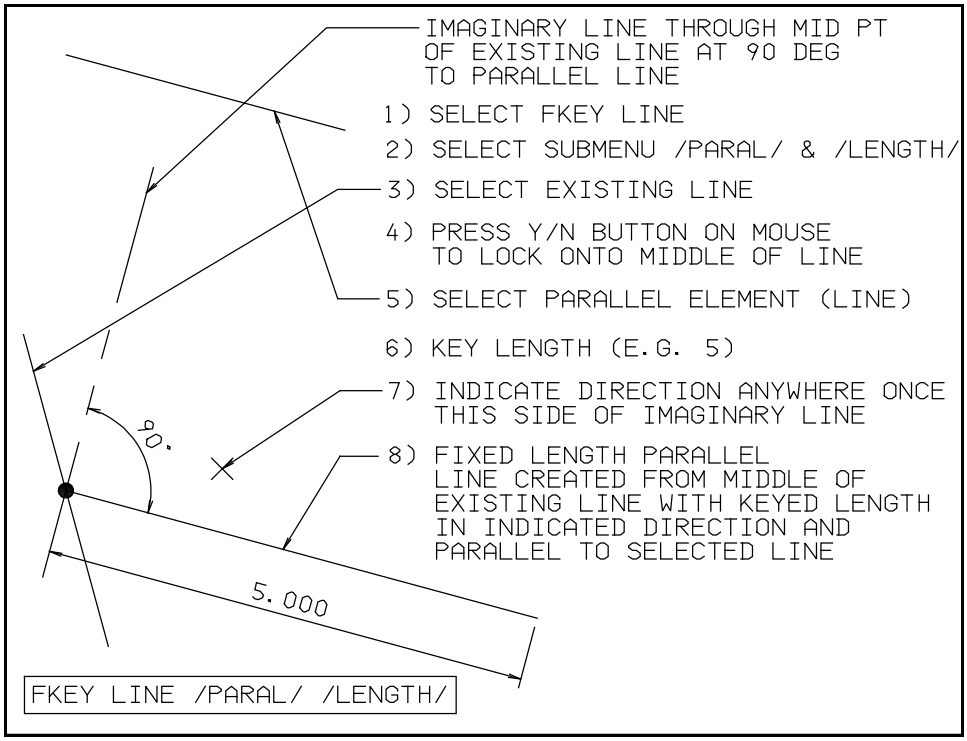

Figure 49 Example for a fixed length parallel line drawn through the middle point of another line (NODE PATH A,T,U,X,Y,HH,Z)

To create this line follow these steps:

STEP NO.	ACTION / RESULT	MENU PROMPT (BEFORE THE ACTION) (2nd line from top of screen)	NODE NO.
1	**SELECT Fkey LINE**		**A**
2	**SELECT submenu /PARAL/ and /LENGTH/ (If they are not already underlined)**		**A**
3	**SELECT existing line**	**Key X,Y / Ind point / Sel element**	**T**
4	**PRESS YN button on mouse to lock onto the middle of the line**	**Ind end / YN center / Sel point**	**U**
5	**SELECT an existing line which the new line will be parallel to**	**Sel parallel element**	**X**
6	**KEY line length (e.g. 5.0)**	**Key length = 6.3125 / Sel element (Note: The actual number displayed here will reflect the last number keyed in)**	**Y**

STEP NO.	ACTION / RESULT	MENU PROMPT (BEFORE THE ACTION) (2nd line from top of screen)	NODE NO.
7	INDICATE direction anywhere once one side of imaginary line.	Ind direction	HH
8	A fixed length parallel line is created from the middle of the existing line with the keyed length (5.0") in the indicated direction	Key X,Y / Ind point / Sel element / YN erase-restore	Z

6B) A PARALLEL CENTER LINE DRAWN THROUGH THE END OF ANOTHER LINE:

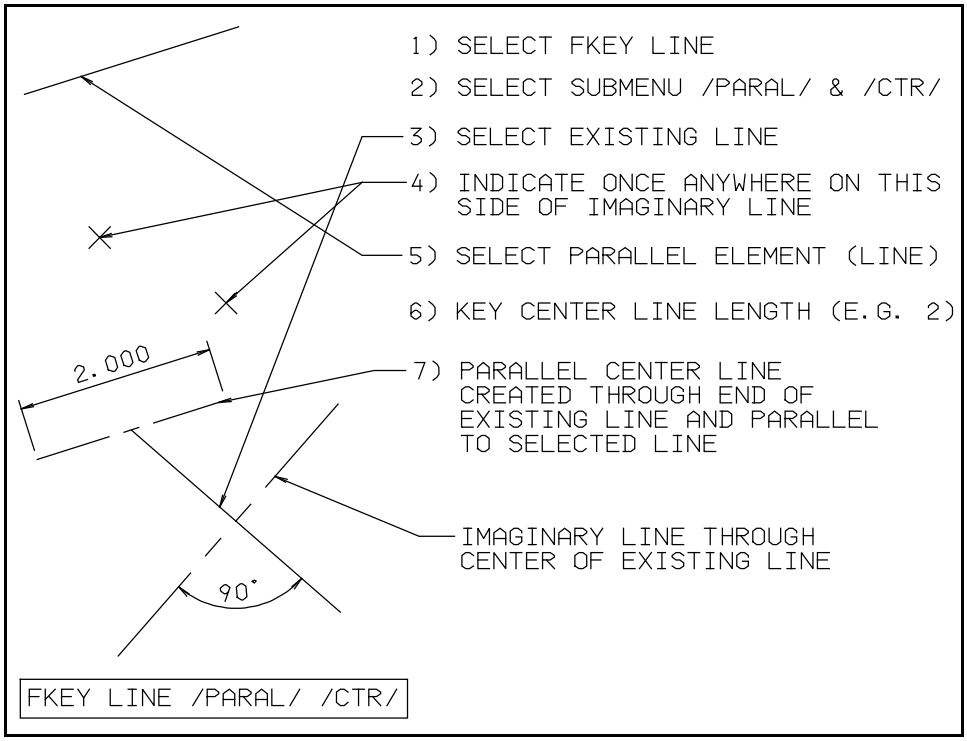

Figure 50 Example for a parallel center line drawn through the end point of another line (NODE PATH A,AA,BB,II,CC,EE,FF,GG)

To create this line follow these steps:

STEP NO.	ACTION / RESULT	MENU PROMPT (BEFORE THE ACTION) (2nd line from top of screen)	NODE NO.
1	SELECT Fkey LINE.		A
2	SELECT submenu /PARAL/ and /CTR/ (If they are not already underlined).		A
3	SELECT an existing line.	Key X,Y / Ind point / Sel element	BB
4	INDICATE once anywhere on one side of the imaginary line.	Ind end / YN center / Sel point	II
5	SELECT an existing line which the new line will be parallel to	Sel parallel element	EE
6	KEY center line length (e.g. 2 for 2") This is the overall length of the center line.	Key length = 2.000 / Sel any element (Note: The actual number displayed here will be the last number keyed in)	FF

STEP NO.	ACTION / RESULT	MENU PROMPT (BEFORE THE ACTION) (2nd line from top of screen)	NODE NO.
7	A parallel center line is created through the end of the existing line and parallel to the line selected in step No. 5.	Key X,Y / Ind point / Sel element / YN erase-restore	GG

6C) A PARALLEL CENTER LINE DRAWN THROUGH THE MIDDLE OF ANOTHER LINE :

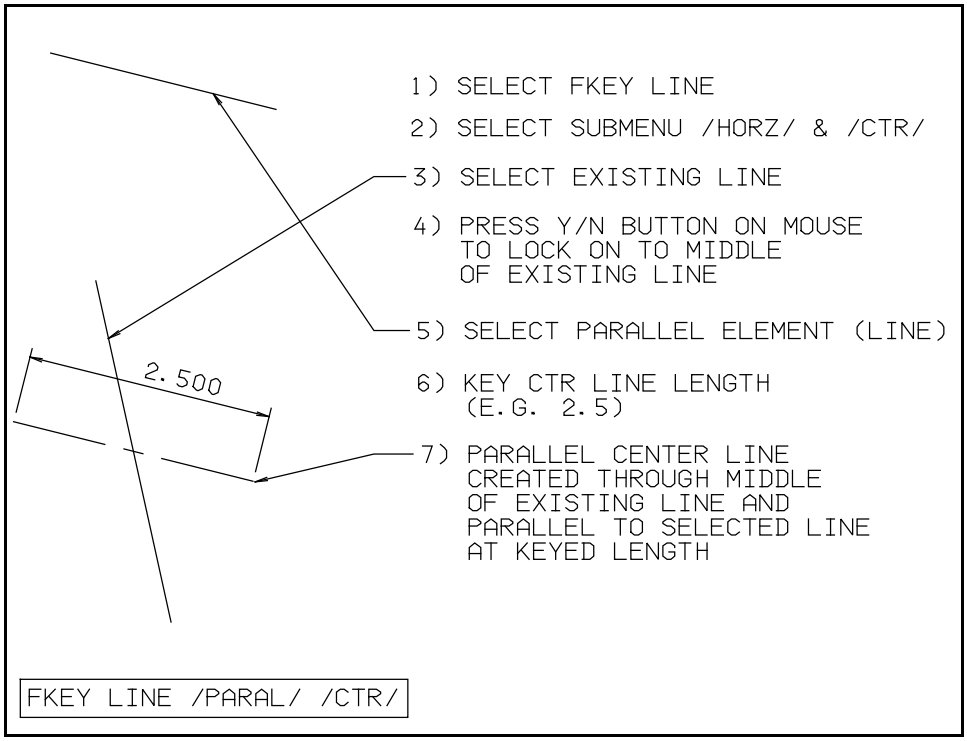

Figure 51 Example for a parallel center line drawn through the middle point of another line (NODE PATH A,AA,BB,II,CC,EE,FF,GG)

To create this line follow these steps:

STEP NO.	ACTION / RESULT	MENU PROMPT (BEFORE THE ACTION) (2nd line from top of screen)	NODE NO.
1	SELECT Fkey LINE		A
2	SELECT submenu /PARAL/ and /CTR/ (If they are not already underlined)		A
3	SELECT existing line.	Key X,Y / Ind point / Sel element	BB
4	PRESS the YN button on the mouse to lock onto the middle of the existing line.	Ind end / YN center / Sel point	II
5	SELECT an existing line which the new line will be parallel to	Sel parallel element	EE
6	KEY the center line length (e.g. 2.5)	Key length = 2.250 / Sel any element (Note: The actual number displayed here will be the last number keyed in)	FF

STEP NO.	ACTION / RESULT	MENU PROMPT (BEFORE THE ACTION) (2nd line from top of screen)	NODE NO.
7	A parallel center line is created through the middle of the existing line and parallel to the line selected in step No. 5.	Key X,Y / Ind point / Sel element / YN erase-restore	GG

All menus in Micro CADAM are intelligent. They anticipate your actions wherever possible. The results depend on the sequence that the **SELECT, INDICATE, KEY** and **Y/N** keys are pressed. This is summarized for FKey LINE / PARAL / and shown in chart form below:

FKEY LINE /PARAL/ ACTION SUMMARY

LINE NO.	TO CREATE	1ST ACTION	2ND ACTION	3RD ACTION	4TH ACTION	5TH ACTION	NODEPATH
BEGINNER SECTION							
1	An unlimited length parallel line drawn through a position X,Y	Key X,Y	SEL parallel element				A,B,C,D
2	An unlimited length parallel line drawn through an indicated location	IND position	SEL parallel element				A,B,E,F
3	An unlimited length parallel line drawn through a point	SEL Pt	SEL parallel element				A,C,G,H,I
4	An unlimited length parallel line drawn tangent to a circle	SEL Circle	SEL parallel element				A,B,G,J,K
5A	A fixed length parallel line starting at a point with a keyed length in an indicated direction	SEL Pt	SEL parallel element	KEY length	IND direction		A,S,T,V,X,Y, HH,Z
5B	A fixed length parallel line starting at a point and continuing until it crosses another element	SEL Pt	SEL parallel element	SEL element			A,S,T,V,X,Y,Z
5C	A fixed length parallel line starting tangent to a circle with a keyed length and running in an indicated direction	SEL Circle	SEL parallel element	KEY length	IND direction		A,S,T,V,X,Y, HH,Z
6A	A parallel center line which is centered on a point	SEL Pt	SEL parallel element	KEY center line length			A,BB,EE,FF, GG
ADVANCED SECTION							
7	An unlimited length parallel line drawn through the end of another line	SEL Line	IND End	SEL parallel element			A,B,G,L,M,N
8	An unlimited length parallel line drawn through the middle of another line	SEL Line	Y/N Center	SEL parallel element			A,B,L,O,P
5D	A fixed length line drawn through the end point of another line	SEL Line	IND End	SEL parallel element	KEY Line length	IND Direction	A,T,U,X,Y,HH ,Z
5E	A fixed length parallel line drawn through the middle of another line	SEL Line	Y/N Center	SEL parallel element	KEY Line length	IND Direction	A,T,U,X,Y,HH ,Z
6B	A parallel center line drawn through the end of another line	SEL Line	IND end	SEL parallel element	KEY center line length		A,BB,II,EE,FF ,GG
6C	A parallel center line drawn through the middle of another line	SEL Line	Y/N Center	SEL parallel element	KEY center line length		A,BB,II,EE,FF ,GG

FKey LINE

SUBMENU / NORM /

Fkey LINE submenu /LINE/ allows you to draw lines. Each line has been assigned a line number. The same line number is also referenced on the Line Road Map and the Action Summary. The different ways to draw normal lines are divided into beginner and advanced sections and are listed with page numbers as follows:

BEGINNER: (See Figure 52 on Page 12-96 for the Beginner Road Map for Normal Line)

NORM LINE NO.	DESCRIPTION	PAGE NO.
1	An unlimited length normal line drawn through position X,Y	12-97
2	An unlimited length normal line drawn through an indicated location	12-98
3	An unlimited length normal line drawn through a point	12-99
4	An unlimited length normal line drawn tangent to a circle	12-100
5A	A fixed length normal line starting at a point with a keyed length in an indicated direction	12-101
5B	A fixed length normal line starting at a point and continuing until it crosses another element	12-103
5C	A fixed length normal line starting tangent to a circle with a keyed length in an indicated direction	12-105
6A	A normal center line which is centered on a point	12-107

ADVANCED: (See Figure 61 on Page 12-110 for the Advanced Road Map for Normal Line)

NORM LINE NO.	DESCRIPTION	PAGE NO.
7	An unlimited length normal line drawn through the end of another line	12-111
8	An unlimited length normal line drawn through the middle of another line	12-112
5D	A fixed length normal line drawn through the end of another line	12-113
5E	A fixed length normal line drawn through the middle of another line	12-115
6B	A normal center line drawn through the end of another line	12-117
6C	A normal center line drawn through the middle of another line	12-119

FKey LINE

SUBMENU / NORM /

BEGINNER

SECTION

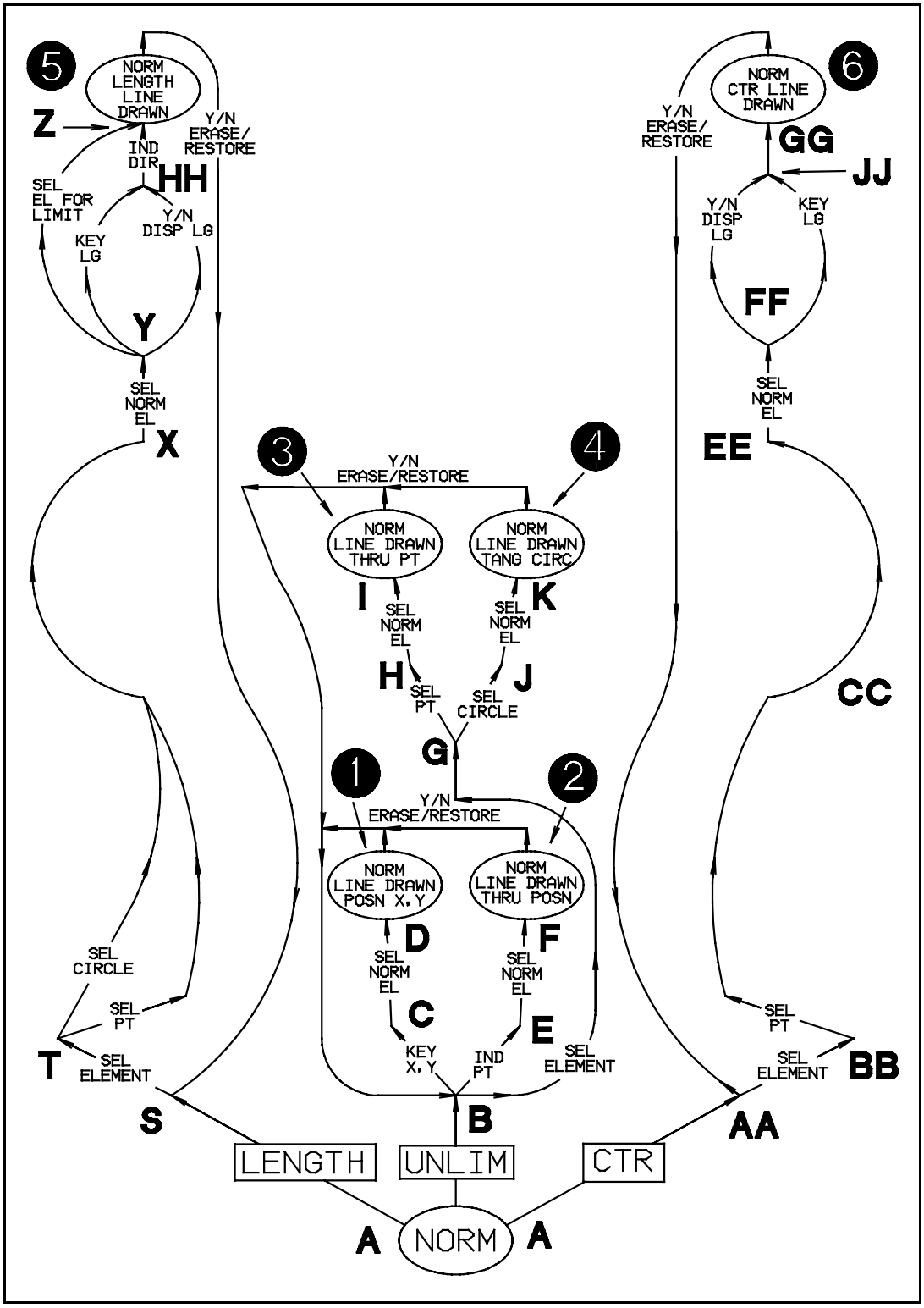

Figure 52 Beginner Road Map for Normal Line

1) AN UNLIMITED LENGTH NORMAL LINE DRAWN THROUGH POSITION X,Y:

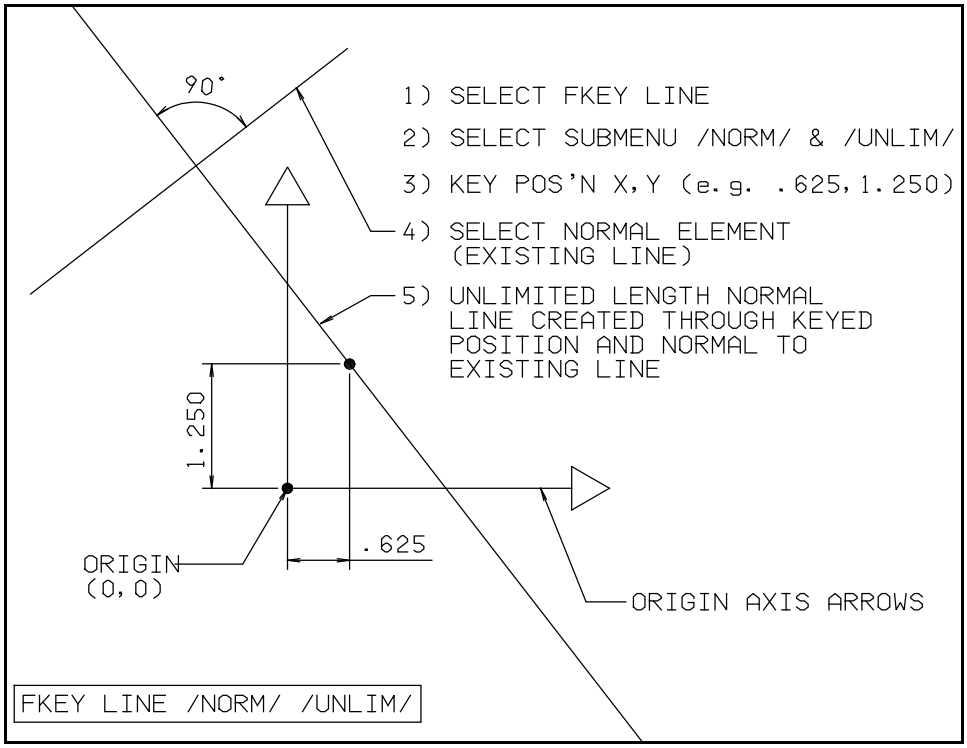

Figure 53 Example for an unlimited length normal line drawn through X,Y (NODE PATH A,B,C,D)

To create this line follow these steps:

STEP NO.	ACTION / RESULT	MENU PROMPT (BEFORE THE ACTION) (2nd line from top of screen)	NODE NO.
1	SELECT Fkey LINE		A
2	SELECT submenu /NORM/ and /UNLIM/ (If they are not already underlined)		A
3	KEY the position the normal line will go through (e.g. .625,1.250)	Key X,Y / Ind point / Sel element	B
4	SELECT an existing line that the new line will be normal to	Sel normal element	C
5	An unlimited length normal line is created through the keyed position and normal to the line selected in step No. 4.	Key X,Y / Ind point / Sel element / YN erase-restore	D

2) AN UNLIMITED LENGTH NORMAL LINE DRAWN THROUGH AN INDICATED LOCATION:

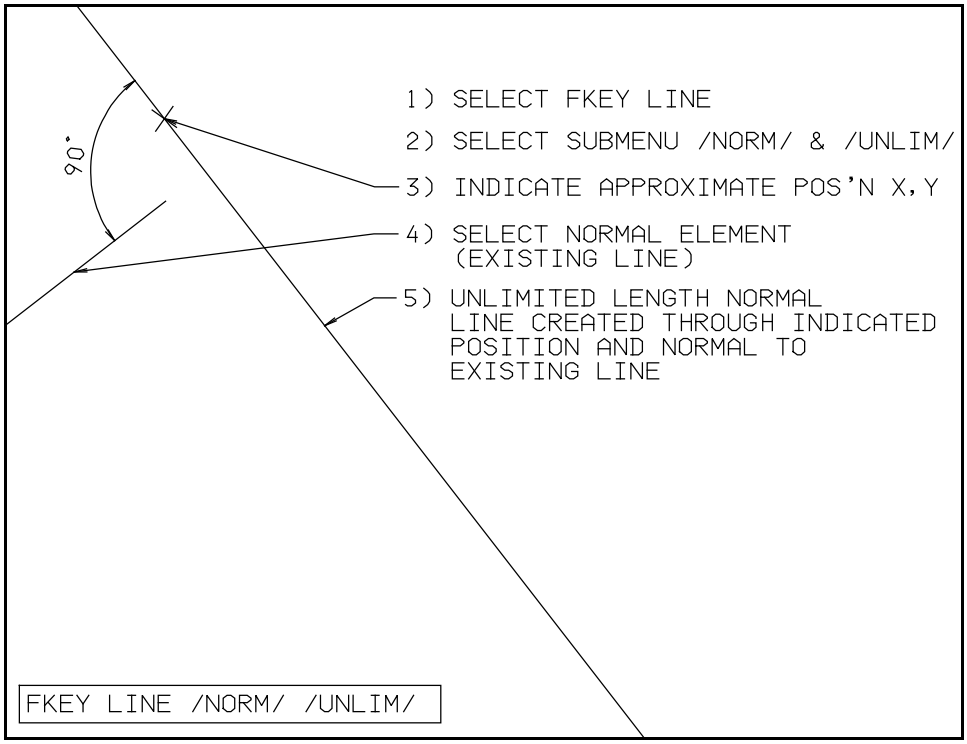

Figure 54 Example for an unlimited length normal line drawn at an indicated position (NODE PATH A,B,E,F)

To create this line follow these steps:

STEP NO.	ACTION / RESULT	MENU PROMPT (BEFORE THE ACTION) (2nd line from top of screen)	NODE NO.
1	SELECT Fkey LINE		A
2	SELECT submenu /NORM/ and /UNLIM/ (If they are not already underlined)		A
3	INDICATE approximate location	Key X,Y / Ind point / Sel element	B
4	SELECT an existing line which the new line will be normal to	Sel normal element	E
5	An unlimited length normal line is created through the INDICATED position and normal to the line selected in step No. 4.	Key X,Y / Ind point / Sel element / YN erase-restore	F

3) AN UNLIMITED LENGTH NORMAL LINE DRAWN THROUGH A POINT:

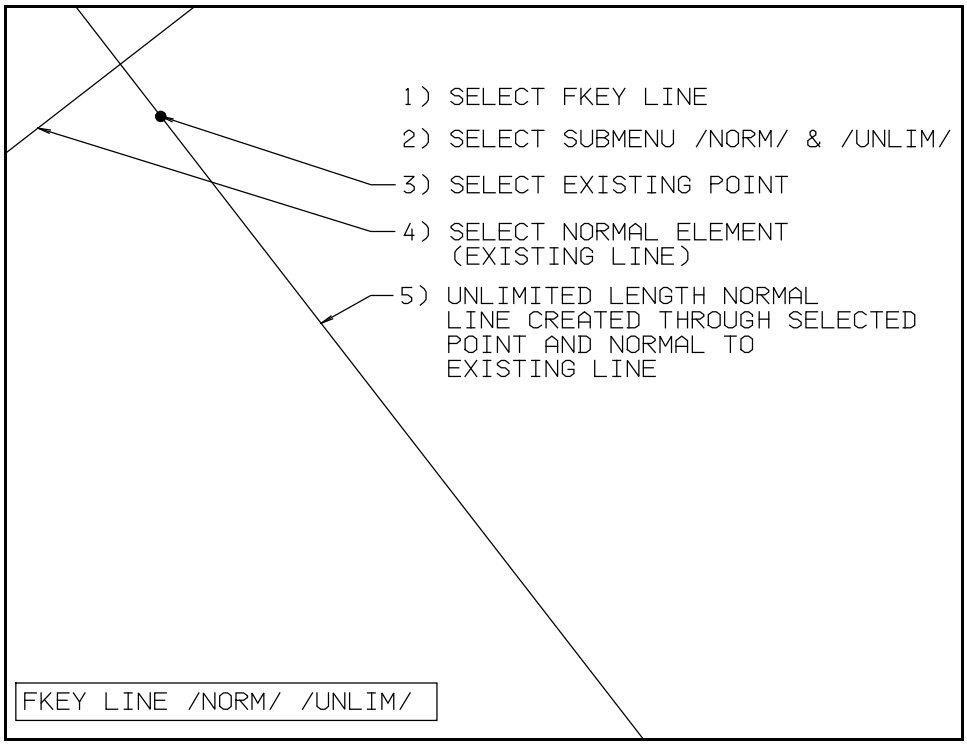

Figure 55 Example for an unlimited length normal line drawn through a point (NODE PATH A,B,G,H,I)

To create this line follow these steps:

STEP NO.	ACTION / RESULT	MENU PROMPT (BEFORE THE ACTION) (2nd line from top of screen)	NODE NO.
1	SELECT Fkey LINE		A
2	SELECT submenu /NORM/ and /UNLIM/ (If they are not already underlined)		A
3	SELECT existing point	Key X,Y / Ind point / Sel element	G
4	SELECT an existing line which the new line will be normal to	Sel normal element	H
5	An unlimited length normal line is created through the SELECTED point and normal to the line selected in step No. 4.	Key X,Y / Ind point / Sel element / YN erase-restore	I

4) AN UNLIMITED LENGTH NORMAL LINE DRAWN TANGENT TO A CIRCLE:

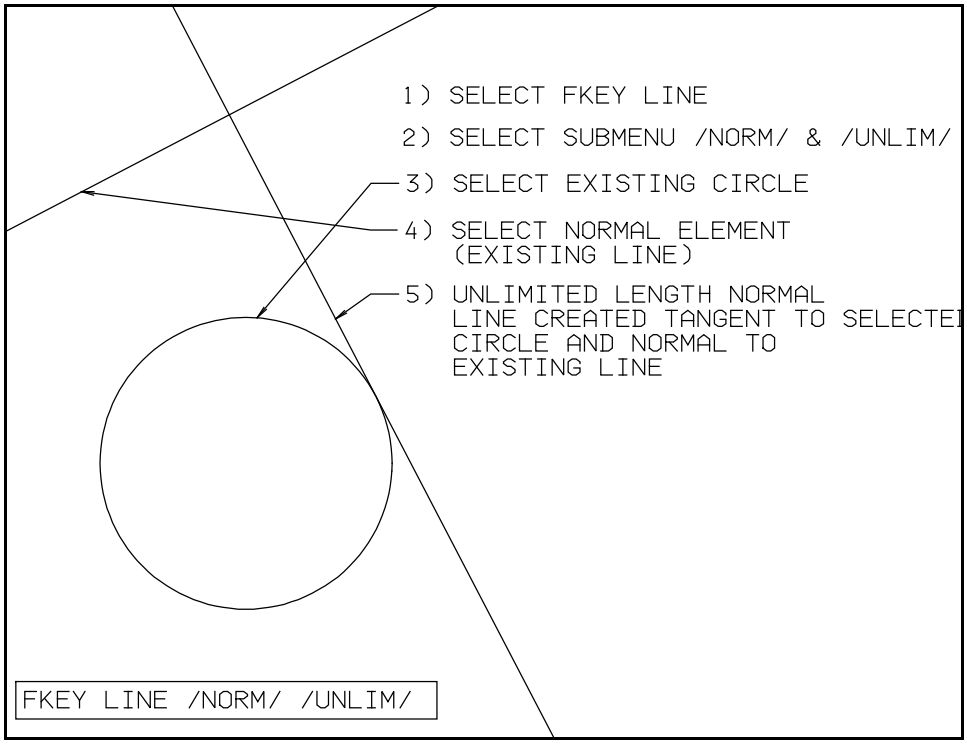

Figure 56 Example for an unlimited length normal line drawn tangent to a circle (NODE PATH A,B,G,J,K)

To create this line follow these steps:

STEP NO.	ACTION / RESULT	MENU PROMPT (BEFORE THE ACTION) (2nd line from top of screen)	NODE NO.
1	SELECT Fkey LINE		A
2	SELECT submenu /NORM/ and /UNLIM/ (If they are not already underlined)		A
3	SELECT right half of existing circle	Key X,Y / Ind point / Sel element	G
4	SELECT an existing line which the new line will be normal to	Sel normal element	J
5	An unlimited length normal line is created tangent to the right half of the selected circle and normal to the line selected in step No. 4.	Key X,Y / Ind point / Sel element / YN erase-restore	K

5A) A FIXED LENGTH NORMAL LINE STARTING AT A POINT WITH A KEYED LENGTH IN AN INDICATED DIRECTION:

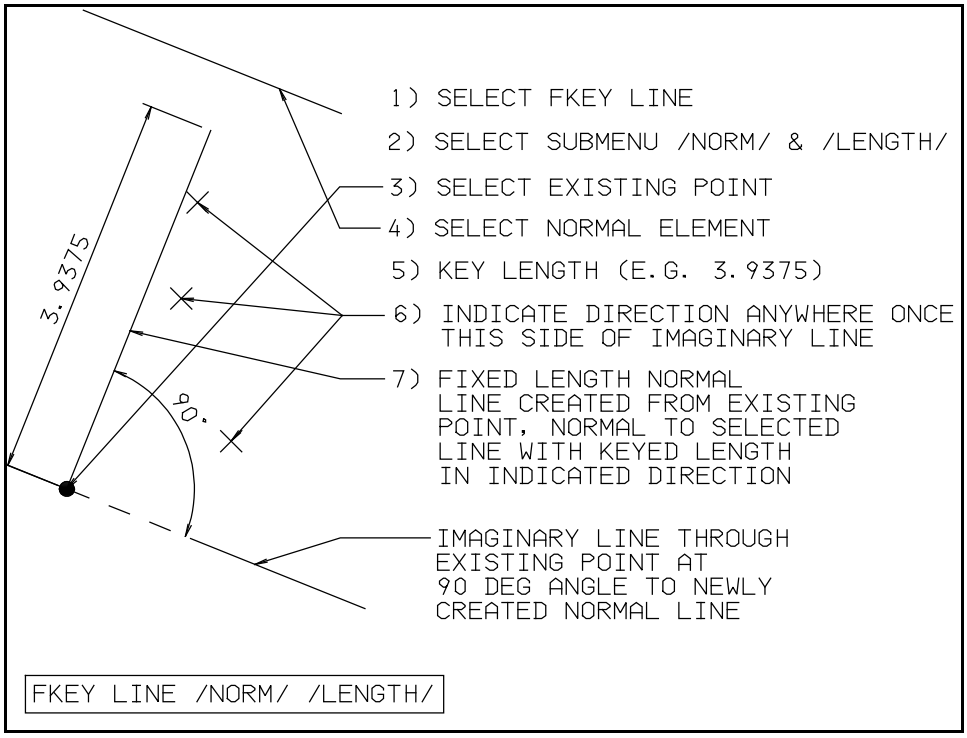

Figure 57 Example for a fixed length parallel line starting at a point with a keyed length in an indicated direction (NODE PATH A,S,T,V,X,Y,HH,Z)

To create this line follow these steps:

STEP NO.	ACTION / RESULT	MENU PROMPT (BEFORE THE ACTION) (2nd line from top of screen)	NODE NO.
1	SELECT Fkey LINE		A
2	SELECT submenu /NORM/ and /LENGTH/ (If they are not already underlined)		A
3	SELECT existing point. This is the starting point for the line.	Key X,Y / Ind point / Sel element	T
4	SELECT an existing line which the new line will be normal to	Sel normal element	X
5	KEY length of line (e.g. 3.9375)	Key length = 5.750 / Sel element for limit (Note: Key length number reflects the last number entered)	Y

STEP NO.	ACTION / RESULT	MENU PROMPT (BEFORE THE ACTION) (2nd line from top of screen)	NODE NO.
6	INDICATE direction once anywhere one side of the imaginary line. This determines the direction the line will go.	Ind direction	HH
7	A fixed length normal line is created from the existing point. Its' length is the keyed in length, its' direction is in the indicated direction and it runs normal to the line selected in step No. 4.	Key X,Y / Ind point / Sel element / YN erase-restore	Z

5B) A FIXED LENGTH NORMAL LINE STARTING AT A POINT AND CONTINUING UNTIL IT CROSSES ANOTHER ELEMENT :

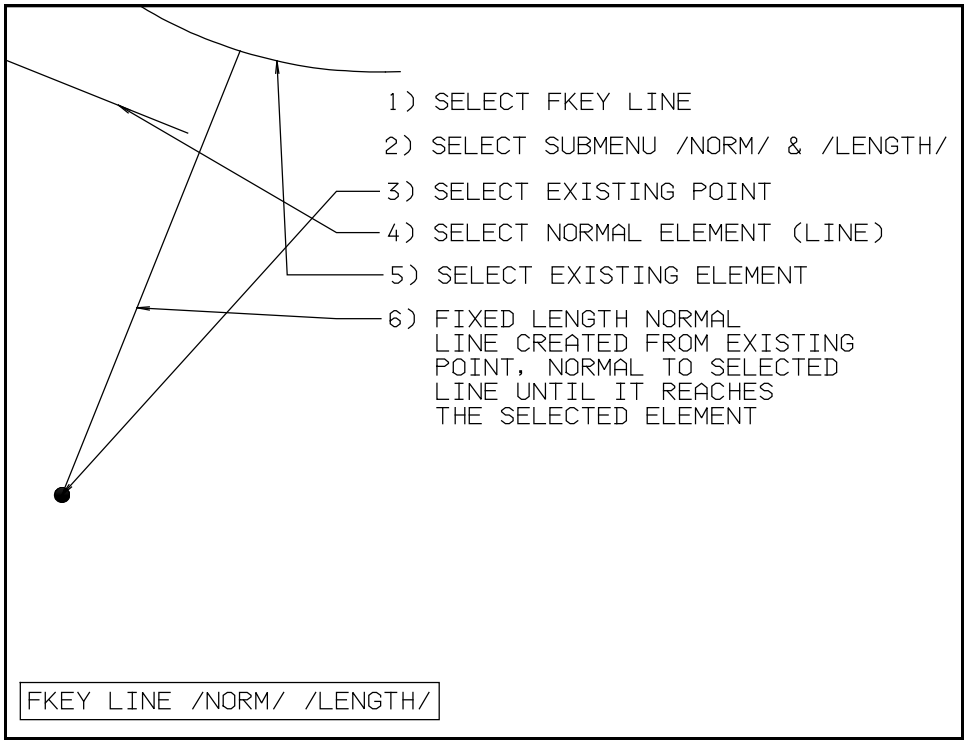

Figure 58 Example for a fixed length normal line starting at a point and running until it crosses another element (NODE PATH A,S,T,V,X,Y,Z)

To create this line follow these steps:

STEP NO.	ACTION / RESULT	MENU PROMPT (BEFORE THE ACTION) (2nd line from top of screen)	NODE NO.
1	SELECT Fkey LINE		A
2	SELECT submenu /NORM/ and /LENGTH/ (If they are not already underlined)		A
3	SELECT existing point. This is the starting point for the line.	Key X,Y / Ind point / Sel element	T
4	SELECT an existing line which the new line will be normal to	Sel normal element	X
5	SELECT existing element. The line will end at this element.	Key length = 1.3125 / Sel any element (Note: Key length number reflects the last number entered)	Y

STEP NO.	ACTION / RESULT	MENU PROMPT (BEFORE THE ACTION) (2nd line from top of screen)	NODE NO.
6	A fixed length normal line is created starting at the existing point, runs until it crosses the selected element and is normal to the line selected in step No. 4.	Key X,Y / Ind point / Sel element / YN erase-restore	Z

5C) A FIXED LENGTH NORMAL LINE STARTING TANGENT TO A CIRCLE WITH A KEYED LENGTH AND RUNNING IN AN INDICATED DIRECTION:

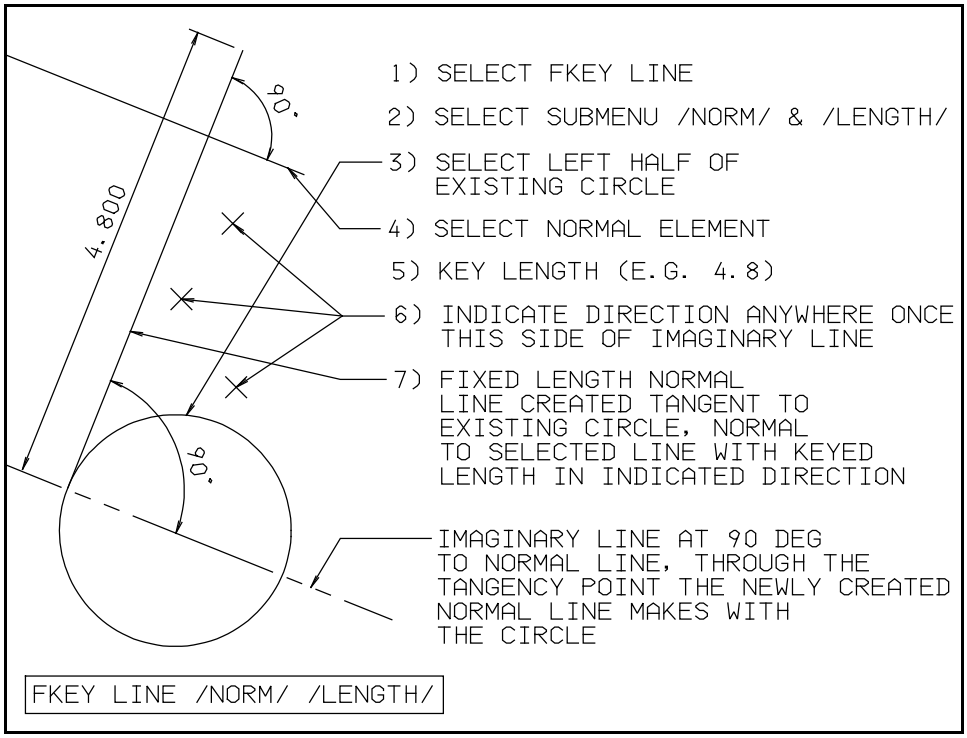

Figure 59 Example for a fixed length normal line starting tangent to a circle with a keyed length and running in an indicated direction (NODE PATH A,S,T,V,X,Y,HH,Z)

To create this line follow these steps:

STEP NO.	ACTION / RESULT	MENU PROMPT (BEFORE THE ACTION) (2nd line from top of screen)	NODE NO.
1	**SELECT Fkey LINE**		**A**
2	**SELECT submenu /NORM/ and /LENGTH/ (If they are not already underlined)**		**A**
3	**SELECT existing circle. The line will start tangent to this circle on the side of the circle selected**	**Key X,Y / Ind point / Sel element**	**T**
4	**SELECT an existing line which the new line will be normal to**	**Sel normal element**	**X**
5	**KEY length (e.g. 4.8). This will be the length of the line.**	**Key length = 3.75000 / Sel any element (Note: Key length number reflects last number entered)**	**Y**
6	**INDICATE direction once anywhere one side of imaginary line.**	**Ind direction**	**HH**

STEP NO.	ACTION / RESULT	MENU PROMPT (BEFORE THE ACTION) (2nd line from top of screen)	NODE NO.
7	A fixed length normal line is created tangent to an existing circle and extending for a keyed in length in the indicated direction and normal to the line selected in step No. 4.	Key X,Y / Ind point / Sel element / YN erase restore	Z

6A) A NORMAL CENTER LINE WHICH IS CENTERED ON A POINT:

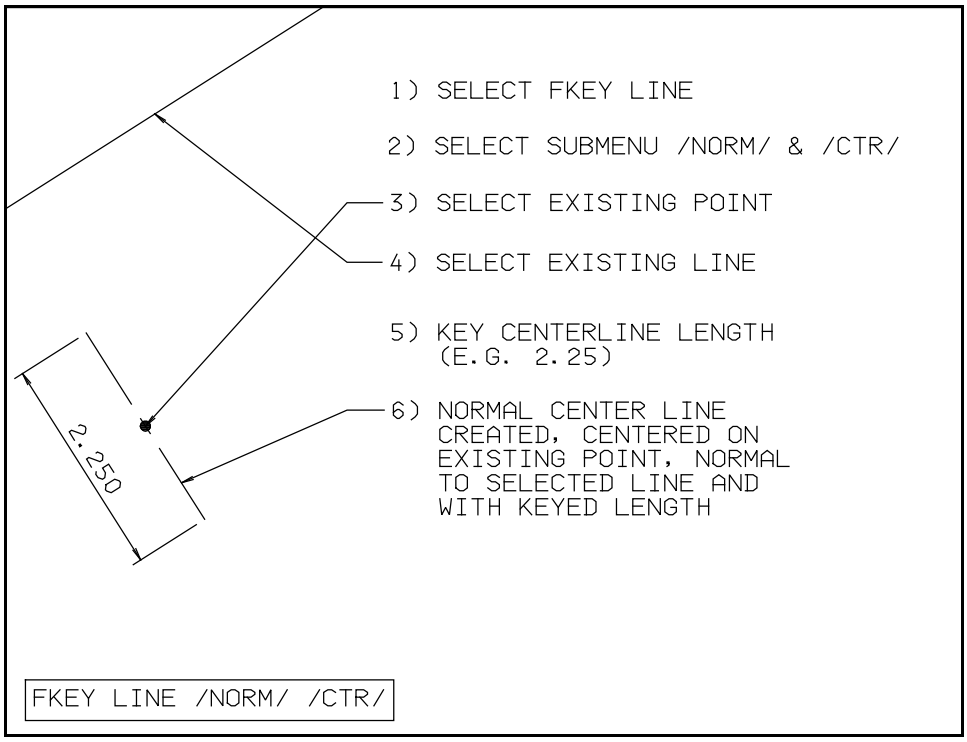

Figure 60 Example for a normal center line centered on a point
(NODE PATH A,AA,BB,CC,EE,FF,GG)

To create this line follow these steps:

STEP NO.	ACTION / RESULT	MENU PROMPT (BEFORE THE ACTION) (2nd line from top of screen)	NODE NO.
1	**SELECT Fkey LINE**		**A**
2	**SELECT submenu /NORM/ and /CTR/ (If they are not already underlined)**		**A**
3	**SELECT existing point.**	**Key X,Y / Ind point / Sel element**	**BB**
4	**SELECT an existing line which the new line will be normal to**	**Sel normal element**	**EE**
5	**KEY center line length (e.g. 2). This will be the total length of the center line.**	**Key length = 4.06250 (Note: Key length number reflects last number entered)**	**FF**
6	**A normal center line is created centered on an existing point and normal to the line selected in step No. 4**	**Key X,Y / Ind point / Sel element**	**GG**

FKey LINE

SUBMENU / NORM /

ADVANCED

SECTION

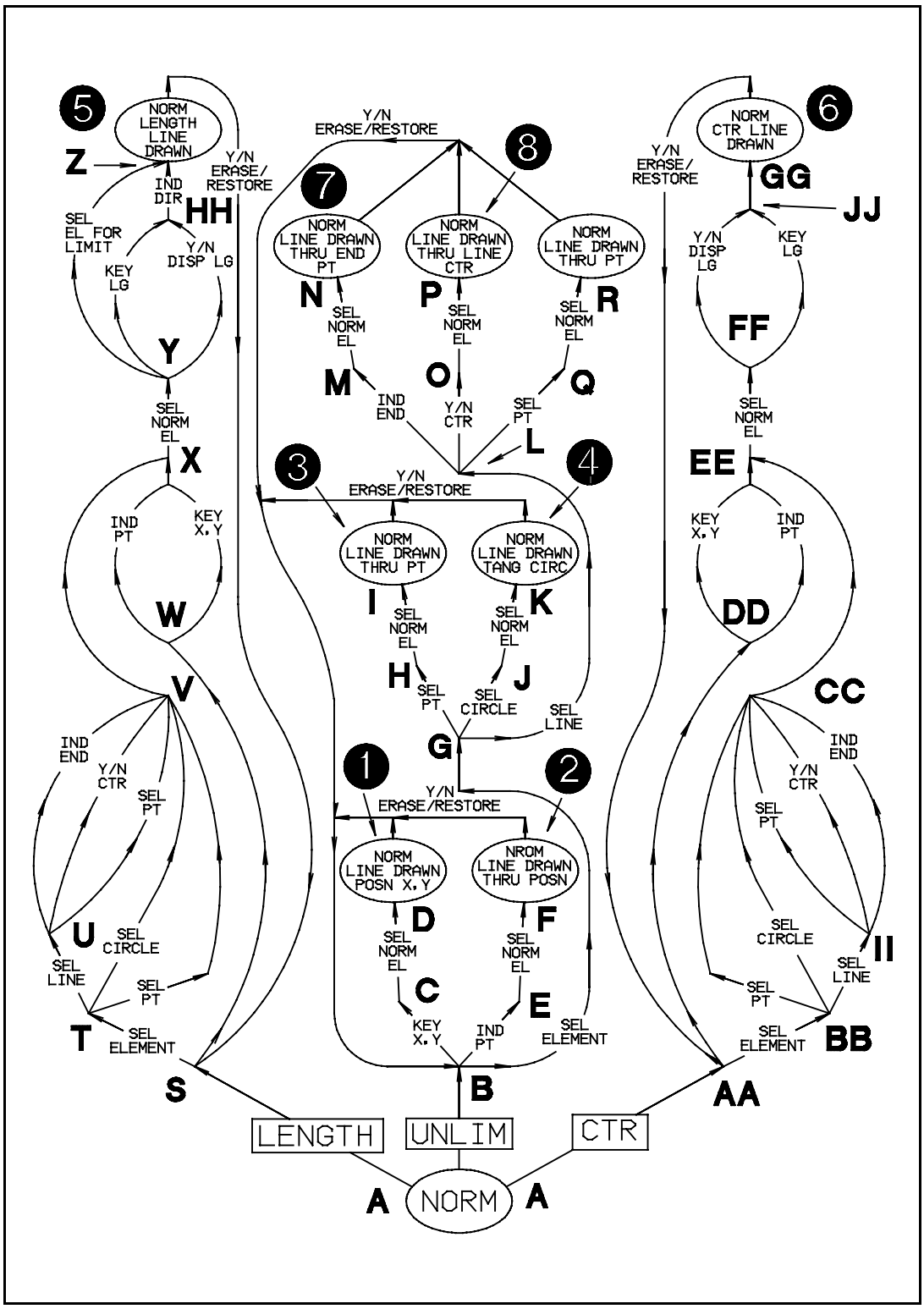

Figure 61 Advanced Road Map for Normal Line

7) AN UNLIMITED LENGTH NORMAL LINE DRAWN THROUGH THE END OF ANOTHER LINE:

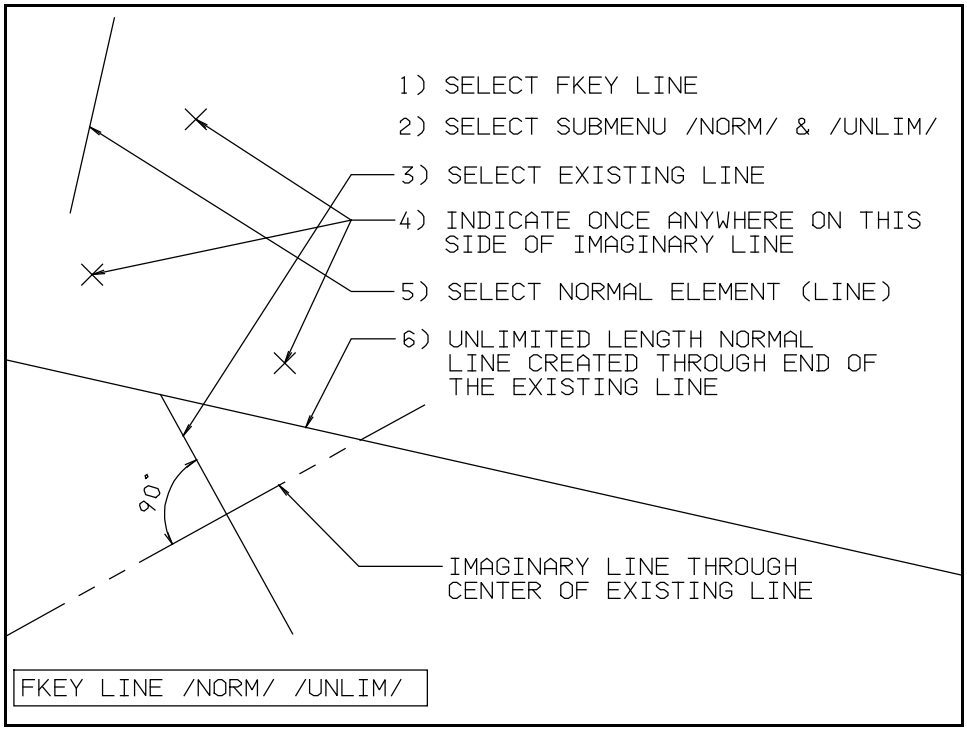

Figure 62 Example for an unlimited length normal line drawn through the end point of another line (NODE PATH A,B,G,L,M,N)

To create this line follow these steps:

STEP NO.	ACTION / RESULT	MENU PROMPT (BEFORE THE ACTION) (2nd line from top of screen)	NODE NO.
1	SELECT Fkey LINE		A
2	SELECT submenu /NORM/ and /UNLIM/ (If they are not already underlined)		A
3	SELECT an existing line	Key X,Y / Ind point / Sel element	G
4	INDICATE once anywhere on one side of the imaginary line	Ind end / YN center / Sel point	L
5	SELECT an existing line which the new line will be normal to	Sel normal element	M
6	An unlimited length normal line is created through the end of the existing line and normal to the line selected in step No. 5.	Key X,Y / Ind point / Sel element / YN erase-restore	N

8) AN UNLIMITED LENGTH NORMAL LINE DRAWN THROUGH THE MIDDLE OF ANOTHER LINE:

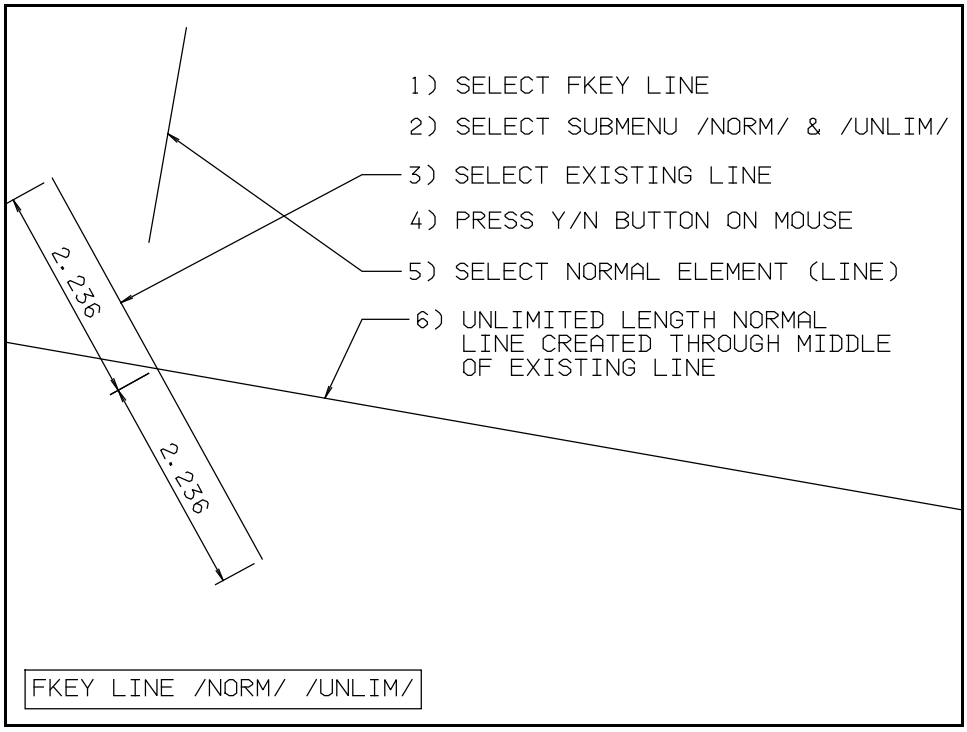

Figure 63 Example for an unlimited length normal line drawn through the middle point of another line (NODE PATH A,B,G,L,O,P)

To create this line follow these steps:

STEP NO.	ACTION / RESULT	MENU PROMPT (BEFORE THE ACTION) (2nd line from top of screen)	NODE NO.
1	SELECT Fkey LINE		A
2	SELECT submenu /NORM/ and /UNLIM/ (If they are not already underlined)		A
3	SELECT an existing line	Key X,Y / Ind point / Sel element	B
4	Press YN button on mouse	Ind end / YN center / Sel point	L
5	SELECT an existing line which the new line will be normal to	Sel normal element	O
6	An unlimited length normal line is created through the middle of the existing line and normal to the line selected in step No. 5.	Key X,Y / Ind point / Sel element / YN erase-restore	P

5D) A FIXED LENGTH NORMAL LINE DRAWN THROUGH THE END POINT OF ANOTHER LINE:

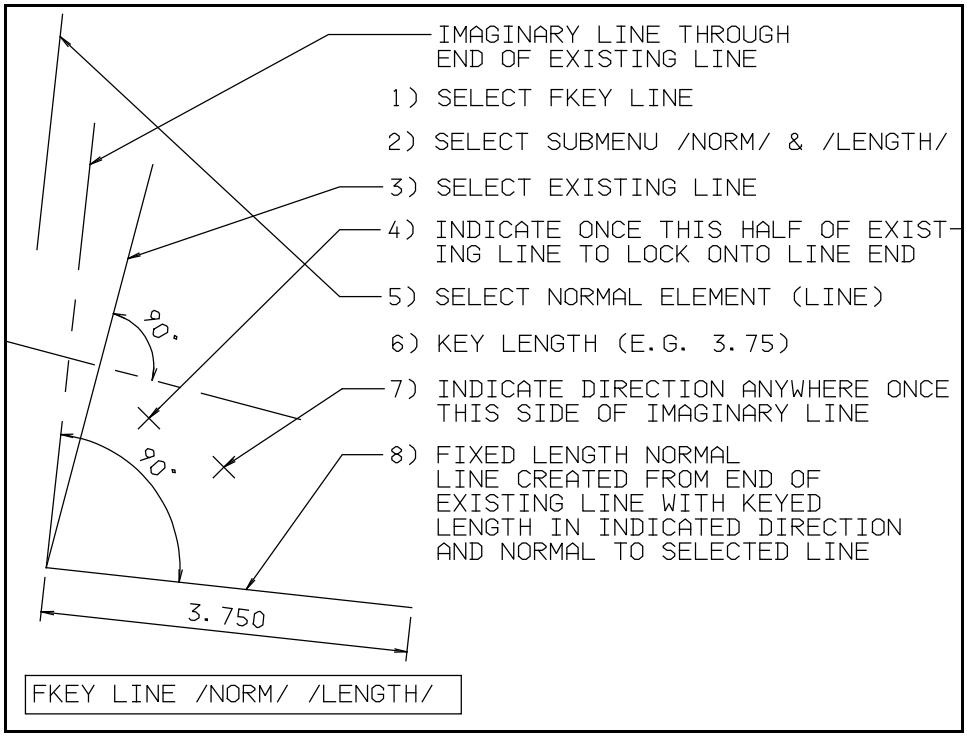

Figure 64 Example for a fixed length parallel line drawn through the end point of another line (NODE PATH A,S,T,U,V,X,Y,HH,Z)

To create this line follow these steps:

STEP NO.	ACTION / RESULT	MENU PROMPT (BEFORE THE ACTION) (2nd line from top of screen)	NODE NO.
1	**SELECT Fkey LINE**		**A**
2	**SELECT submenu /NORM/ and /LENGTH/ (If they are not already underlined)**		**A**
3	**SELECT an existing line**	**Key X,Y / Ind point / Sel element**	**T**
4	**INDICATE once one half of existing line to lock onto line end**	**Ind end / YN center / Sel point**	**U**
5	**SELECT an existing line which the new line will be normal to**	**Sel normal element**	**X**
6	**KEY line length (e.g. 3.75)**	**Key length = 1.750 / Sel element (Note: The actual number displayed here will be the last number keyed in**	**Y**

STEP NO.	ACTION / RESULT	MENU PROMPT (BEFORE THE ACTION) (2nd line from top of screen)	NODE NO.
7	INDICATE direction of fixed length line once anywhere one side of imaginary line	Ind direction	HH
8	A fixed length normal line is created from the end of the existing line with the keyed length (3.75) in the indicated direction and normal to the line selected in step No. 5.	Key X,Y / Ind point / Sel element / YN erase-restore	Z

5E) A FIXED LENGTH NORMAL LINE DRAWN THROUGH THE MIDDLE OF ANOTHER LINE:

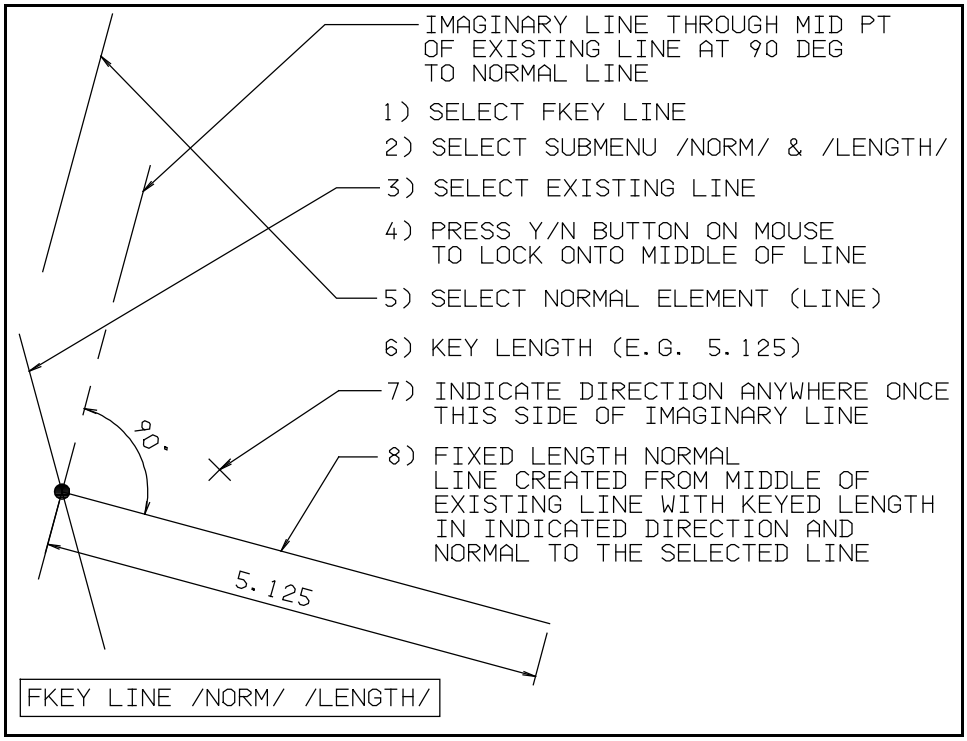

Figure 65 Example for a fixed length normal line drawn through the middle point of another line (NODE PATH A,T,U,X,Y,HH,Z)

To create this line follow these steps:

STEP NO.	ACTION / RESULT	MENU PROMPT (BEFORE THE ACTION) (2nd line from top of screen)	NODE NO.
1	SELECT Fkey LINE		A
2	SELECT submenu /NORM/ and /LENGTH/ (If they are not already underlined)		A
3	SELECT existing line	Key X,Y / Ind point / Sel element	T
4	PRESS YN button on mouse to lock onto the middle of the line	Ind end / YN center / Sel point	U
5	SELECT an existing line which the new line will be normal to	Sel normal element	X
6	KEY line length (e.g. 5.125)	Key length = 6.3125 / Sel element (Note: The actual number displayed here will reflect the last number keyed in)	Y

STEP NO.	ACTION / RESULT	MENU PROMPT (BEFORE THE ACTION) (2nd line from top of screen)	NODE NO.
7	INDICATE direction anywhere once one side of imaginary line.	Ind direction	HH
8	A fixed length normal line is created from the middle of the existing line with the keyed length (5.125") in the indicated direction	Key X,Y / Ind point / Sel element / YN erase-restore	Z

6B) A NORMAL CENTER LINE DRAWN THROUGH THE END OF ANOTHER LINE:

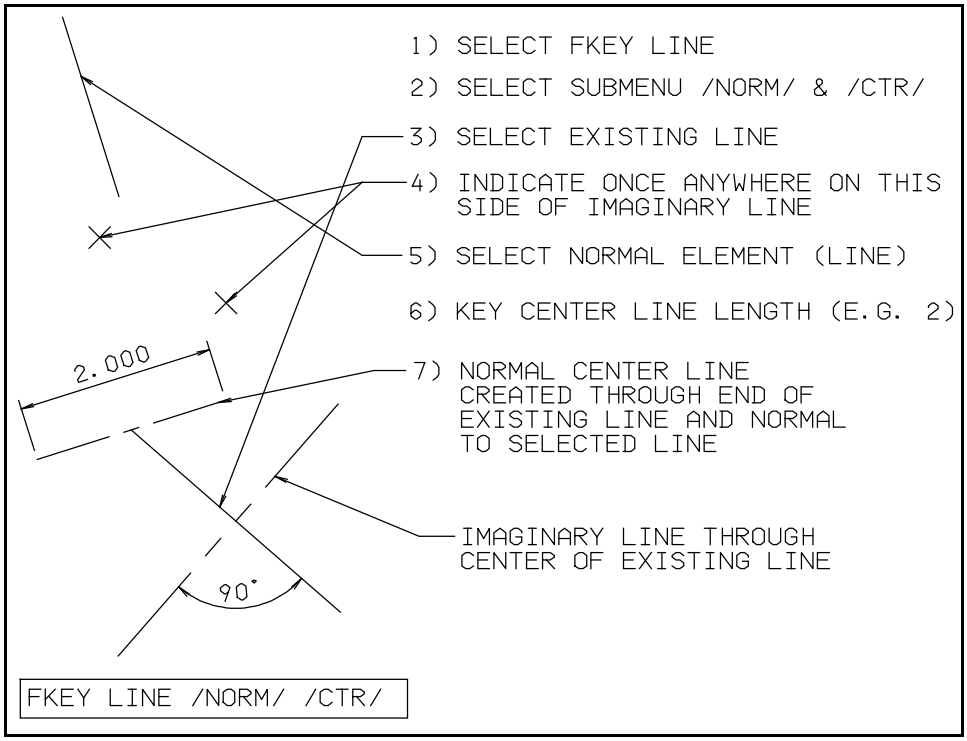

Figure 66 Example for a parallel center line drawn through the end point of another line (NODE PATH A,AA,BB,II,CC,EE,FF,GG)

To create this line follow these steps:

STEP NO.	ACTION / RESULT	MENU PROMPT (BEFORE THE ACTION) (2nd line from top of screen)	NODE NO.
1	SELECT Fkey LINE.		A
2	SELECT submenu /NORM/ and /CTR/ (If they are not already underlined).		A
3	SELECT an existing line.	Key X,Y / Ind point / Sel element	BB
4	INDICATE once anywhere on one side of the imaginary line.	Ind end / YN center / Sel point	II
5	SELECT an existing line which the new line will be normal to	Sel normal element	EE
6	KEY center line length (e.g. 2 for 2") This is the overall length of the center line.	Key length = 2.000 / Sel any element (Note: The actual number displayed here will be the last number keyed in)	FF

STEP NO.	ACTION / RESULT	MENU PROMPT (BEFORE THE ACTION) (2nd line from top of screen)	NODE NO.
7	A normal center line is created through the end of the existing line and normal to the line selected in step No. 5.	Key X,Y / Ind point / Sel element / YN erase-restore	GG

6C) A NORMAL CENTER LINE DRAWN THROUGH THE MIDDLE OF ANOTHER LINE :

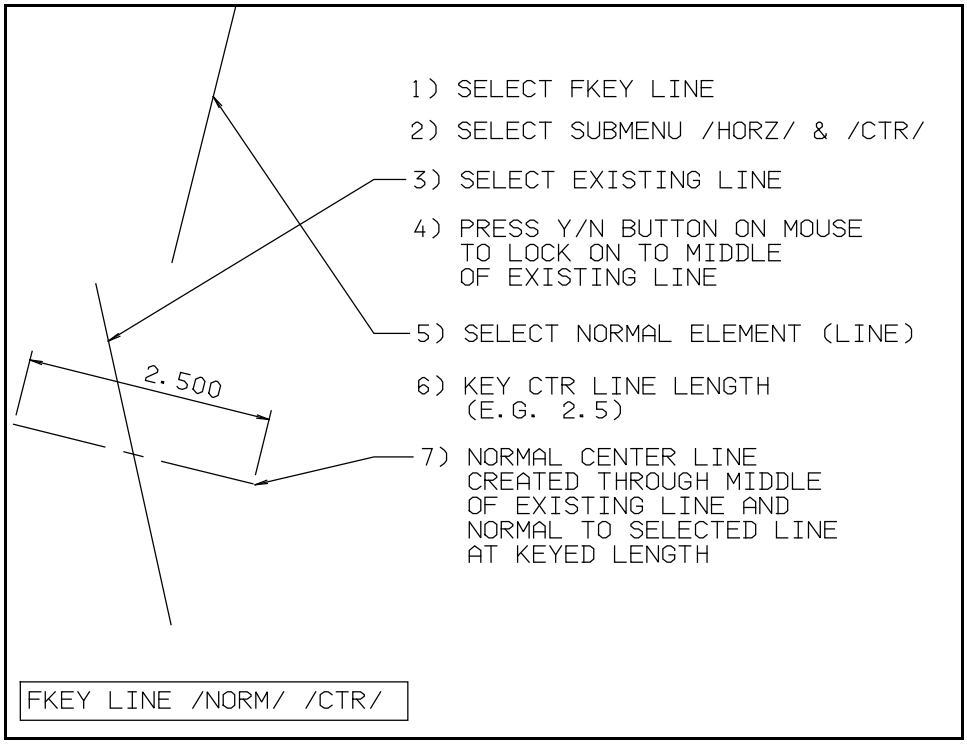

Figure 67 Example for a normal center line drawn through the middle point of another line (NODE PATH A,AA,BB,II,CC,EE,FF,GG)

To create this line follow these steps:

STEP NO.	ACTION / RESULT	MENU PROMPT (BEFORE THE ACTION) (2nd line from top of screen)	NODE NO.
1	SELECT Fkey LINE		A
2	SELECT submenu /NORM/ and /CTR/ (If they are not already underlined)		A
3	SELECT existing line.	Key X,Y / Ind point / Sel element	BB
4	PRESS the YN button on the mouse to lock onto the middle of the existing line.	Ind end / YN center / Sel point	II
5	SELECT an existing line which the new line will be normal to	Sel normal element	EE
6	KEY the center line length (e.g. 2.5)	Key length = 2.250 / Sel any element (Note: The actual number displayed here will be the last number keyed in)	FF

STEP NO.	ACTION / RESULT	MENU PROMPT (BEFORE THE ACTION) (2nd line from top of screen)	NODE NO.
7	A normal center line is created through the middle of the existing line and normal to the line selected in step No. 5.	Key X,Y / Ind point / Sel element / YN erase-restore	GG

All menus in Micro CADAM are intelligent. They anticipate your actions wherever possible. The results depend on the sequence that the **SELECT, INDICATE, KEY** and **Y/N** keys are pressed. This is summarized for FKey LINE / NORM / and shown in chart form below:

FKEY LINE /NORM/ ACTION SUMMARY

LINE NO.	TO CREATE	1ST ACTION	2ND ACTION	3RD ACTION	4TH ACTION	5TH ACTION	NODEPATH
BEGINNER SECTION							
1	An unlimited length normal line drawn through a position X,Y	Key X,Y	SEL normal element				A,B,C,D
2	An unlimited length normal line drawn through an indicated location	IND position	SEL normal element				A,B,E,F
3	An unlimited length normal line drawn through a point	SEL Pt	SEL normal element				A,C,G,H,I
4	An unlimited length normal line drawn tangent to a circle	SEL Circle	SEL normal element				A,B,G,J,K
5A	A fixed length normal line starting at a point with a keyed length in an indicated direction	SEL Pt	SEL normal element	KEY length	IND direction		A,S,T,V,X,Y, HH,Z
5B	A fixed length normal line starting at a point and continuing until it crosses another element	SEL Pt	SEL normal element	SEL element			A,S,T,V,X,Y,Z
5C	A fixed length normal line starting tangent to a circle with a keyed length and running in an indicated direction	SEL Circle	SEL normal element	KEY length	IND direction		A,S,T,V,X,Y, HH,Z
6A	A normal center line which is centered on a point	SEL Pt	SEL normal element	KEY center line length			A,BB,EE,FF, GG
ADVANCED SECTION							
7	An unlimited length normal line drawn through the end of another line	SEL Line	IND End	SEL normal element			A,B,G,L,M,N
8	An unlimited length normal line drawn through the middle of another line	SEL Line	Y/N Center	SEL normal element			A,B,L,O,P
5D	A fixed length line drawn through the end point of another line	SEL Line	IND End	SEL normal element	KEY Line length	IND Direction	A,T,U,X,Y,HH ,Z
5E	A fixed length normal line drawn through the middle of another line	SEL Line	Y/N Center	SEL normal element	KEY Line length	IND Direction	A,T,U,X,Y,HH ,Z
6B	A normal center line drawn through the end of another line	SEL Line	IND end	SEL normal element	KEY center line length		A,BB,II,EE,FF ,GG
6C	A normal center line drawn through the middle of another line	SEL Line	Y/N Center	SEL normal element	KEY center line length		A,BB,II,EE,FF ,GG

FKey LINE

SUBMENU / ANGLE /

Fkey LINE submenu /ANGLE/ allows you to draw angled, fixed length or unlimited length lines or centerlines. The angle can be measured from the X axis or relative to another line. Each line has been assigned a line number. The same line number is also referenced on the Line Road Map and the Action Summary. The different ways to draw angled lines are divided into beginner and advanced sections and are listed with page numbers as follows:

BEGINNER: (See Figure 68 on Page 12-128 for the Beginner Road Map for Angle Line)

ANGLE LINE NO.	DESCRIPTION	PAGE NO.
1A	An unlimited length angle line drawn through position X,Y at an angle that is measured from the X axis	12-129
1B	An unlimited length angle line drawn through position X,Y at an angle that is measured relative to another line	12-130
2	An unlimited length angle line drawn through an indicated location at an angle that is measured from the X axis	12-132
3	An unlimited length angle line drawn through a point at an angle that is measured from the X axis	12-133
4A	An unlimited length angle line drawn tangent to a circle at an angle that is measured from the X axis	12-134
4B	An unlimited length angle line drawn tangent to a circle at an angle measured relative to another line	12-135
5A	A fixed length angle line starting at a point with a keyed length in an indicated direction at an angle that is measured from the X axis	12-137
5B	A fixed length angle line starting at a point, at an angle that is measured from the X axis, and continuing until it crosses another element	12-139
5C	A fixed length angle line starting tangent to a circle, at an angle that is measured from the X axis, with a keyed length in an indicated direction	12-141
5D	A fixed length angle line starting tangent to a circle, at an angle that is measured relative to another line, with a keyed length in an indicated direction	12-143
6A	An angle center line which is centered on a point at an angle measured from the X axis	12-145

ADVANCED: (See Figure 80 on Page 12-148 for the Advanced Road Map for Angle Line)

ANGLE LINE NO.	DESCRIPTION	PAGE NO.
7	An unlimited length angle line drawn through the end of another line, at an angle that is measured from the X axis	12-149
8	An unlimited length angle line drawn through the middle of another line, at an angle that is measured from the X axis	12-151
5E	A fixed length angle line drawn through the end of another line, at an angle that is measured from the X axis	12-143
6B	A angle center line drawn through the end of another line at an angle measured from the X axis	12-155
6C	A angle center line drawn through the middle of another line, at an angle measured from the X axis	12-157

Note that all ***positive*** angles are measured in the ***counter clockwise (i.e. CCW) direction*** (e.g. 45 deg). All ***negative*** angles are measured in the ***clockwise (i.e. CW) direction*** (e.g. -15 deg).

Angles are considered to be either *absolute* or *relative*. An absolute angle is always measured from the X axis. A relative angle is always measured relative to the angle of another line; in this case a *delta* angle must be entered. This delta angle is added or subtracted from the angle of the referenced line to provide a new angle.

FKey LINE

SUBMENU / ANGLE /

BEGINNER

SECTION

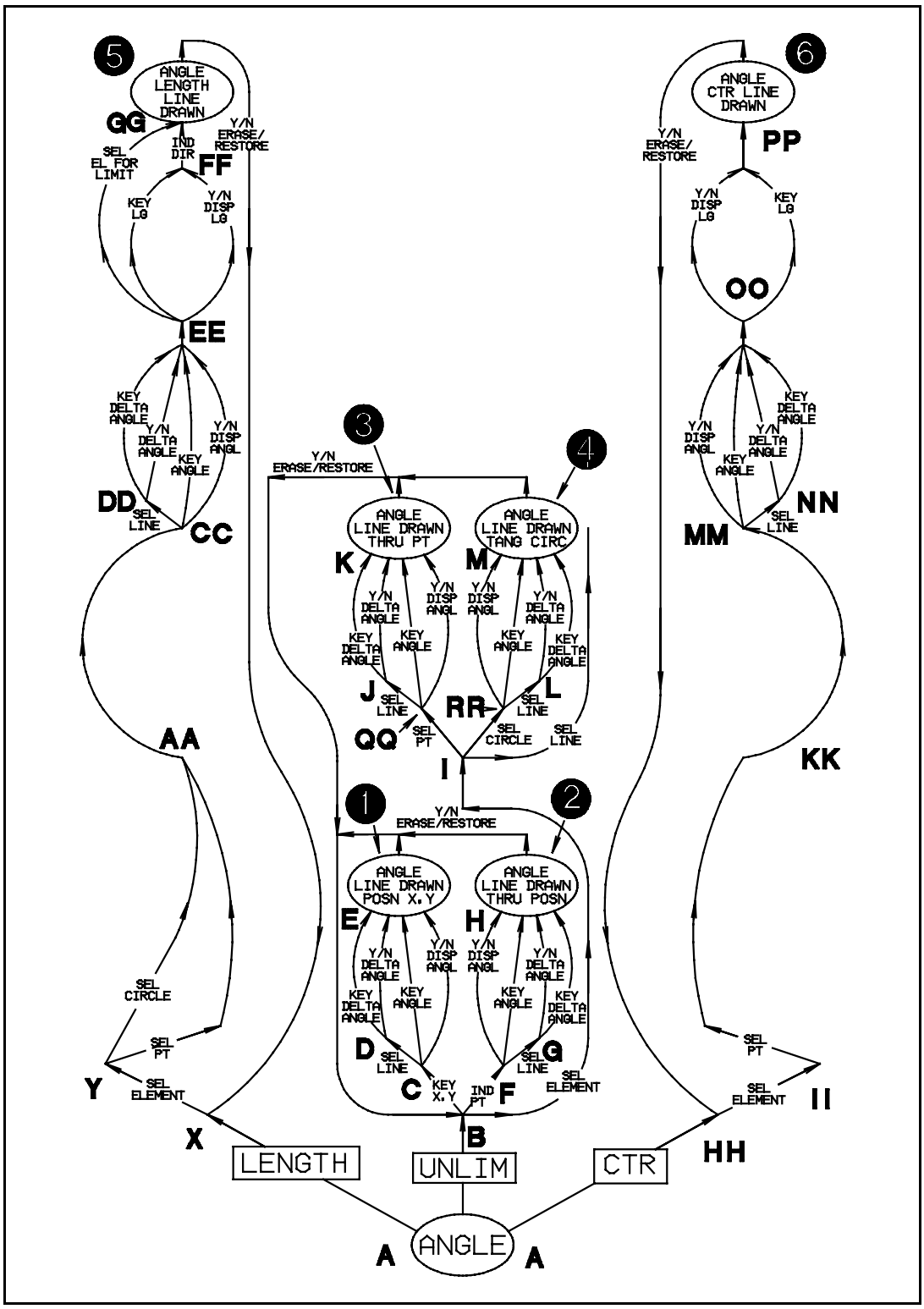

Figure 68 Beginner Road Map for Angle Line

1A) AN UNLIMITED LENGTH ANGLE LINE DRAWN THROUGH POSITION X,Y AT AN ANGLE THAT IS MEASURED FROM THE X AXIS:

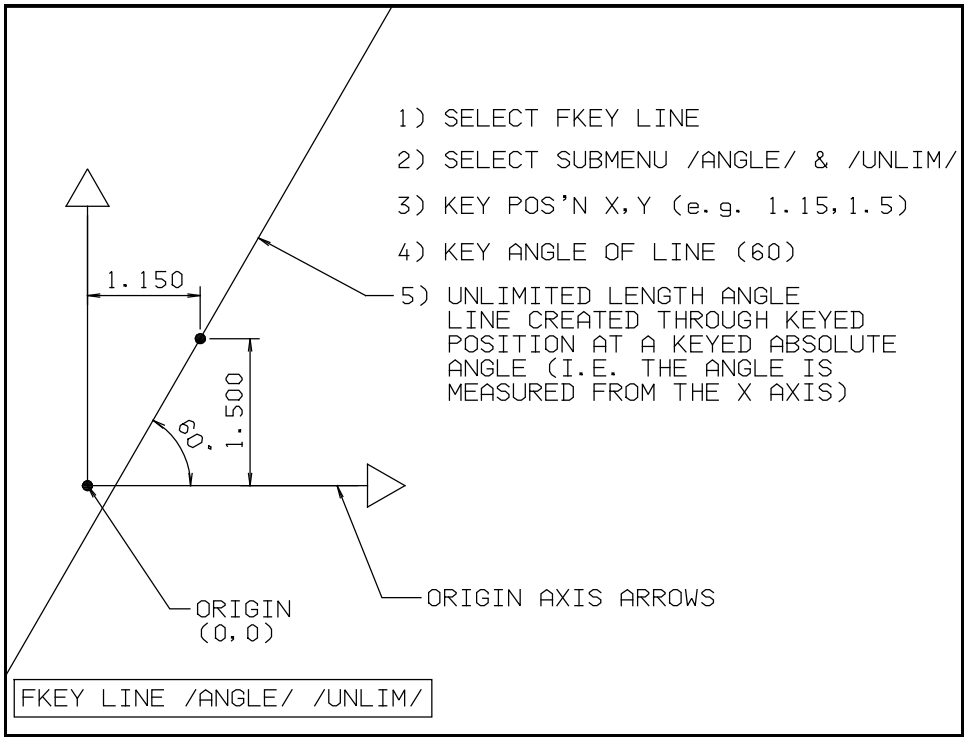

Figure 69 Example for an unlimited length angle line drawn through X,Y, at an angle that is measured from the X axis (NODE PATH A,B,C,E)

To create this line follow these steps:

STEP NO.	ACTION / RESULT	MENU PROMPT (BEFORE THE ACTION) (2nd line from top of screen)	NODE NO.
1	**SELECT Fkey LINE**		**A**
2	**SELECT submenu /ANGLE/ and /UNLIM/ (If they are not already underlined)**		**A**
3	**KEY the position the angle line will go through (e.g. 1.15,1.5)**	**Key X,Y / Ind point / Sel element**	**B**
4	**KEY the angle of the line (60)**	**Sel line / Key angle = 12, 0, 0 (Note: The actual number displayed here will reflect the last number keyed in)**	**C**
5	**An unlimited length angle line is created through the keyed position at a keyed absolute angle (i.e. the angle is measured from the X axis)**	**Key X,Y / Ind point / Sel element / YN erase-restore**	**E**

1B) AN UNLIMITED LENGTH ANGLE LINE DRAWN THROUGH POSITION X,Y AT AN ANGLE THAT IS MEASURED RELATIVE TO ANOTHER LINE:

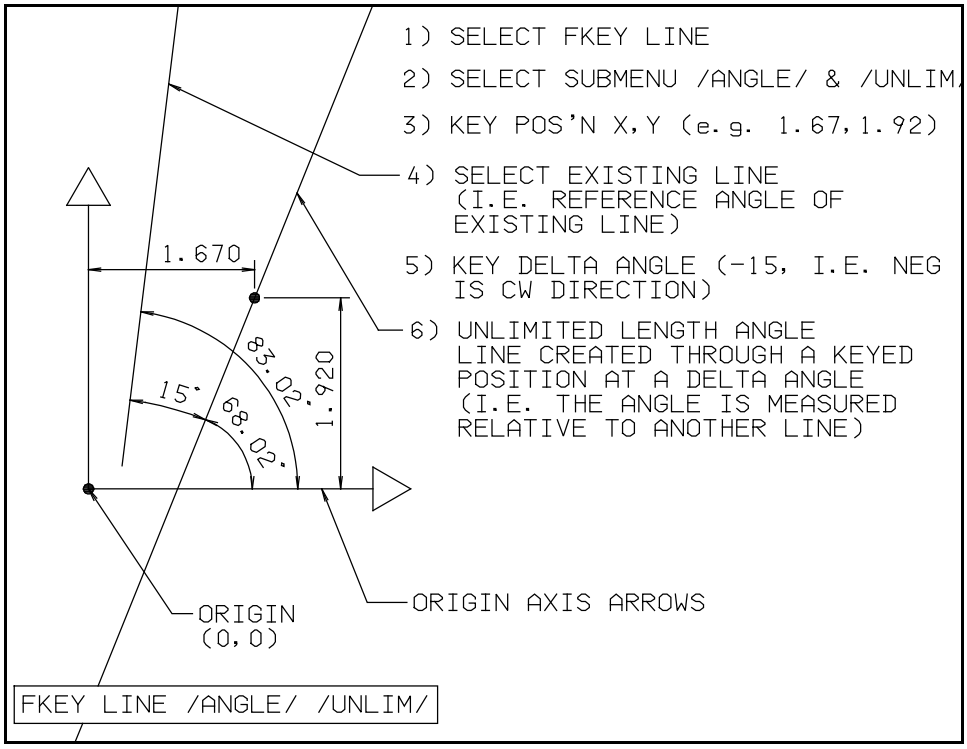

Figure 70 Example for an unlimited length angle line drawn through X,Y, at an angle measured relative to another line (NODE PATH A,B,C,D,E)

To create this line follow these steps:

STEP NO.	ACTION / RESULT	MENU PROMPT (BEFORE THE ACTION) (2nd line from top of screen)	NODE NO.
1	**SELECT Fkey LINE**		**A**
2	**SELECT submenu /ANGLE/ and /UNLIM/ (If they are not already underlined)**		**A**
3	**KEY position X,Y (e.g. 1.67,1.92)**	**Key X,Y / Ind point / Sel element**	**B**
4	**SELECT existing line (i.e. reference the angle of an existing line)**	**Sel line / Key angle = 33 , 0 , 0 (Note: The actual number displayed here will reflect the last number keyed in)**	**C**
5	**KEY delta angle (-15) (i.e. negative is CW direction)**	**Key delta angle = 15, 0, 0**	**D**

STEP NO.	ACTION / RESULT	MENU PROMPT (BEFORE THE ACTION) (2nd line from top of screen)	NODE NO.
6	An unlimited length angle line is created through the keyed position at a delta angle (i.e. the angle is measured relative to another line)	Key X,Y / Ind point / Sel element / YN erase-restore	E

2) AN UNLIMITED LENGTH ANGLE LINE DRAWN THROUGH AN INDICATED LOCATION AT AN ANGLE THAT IS MEASURED FROM THE X AXIS:

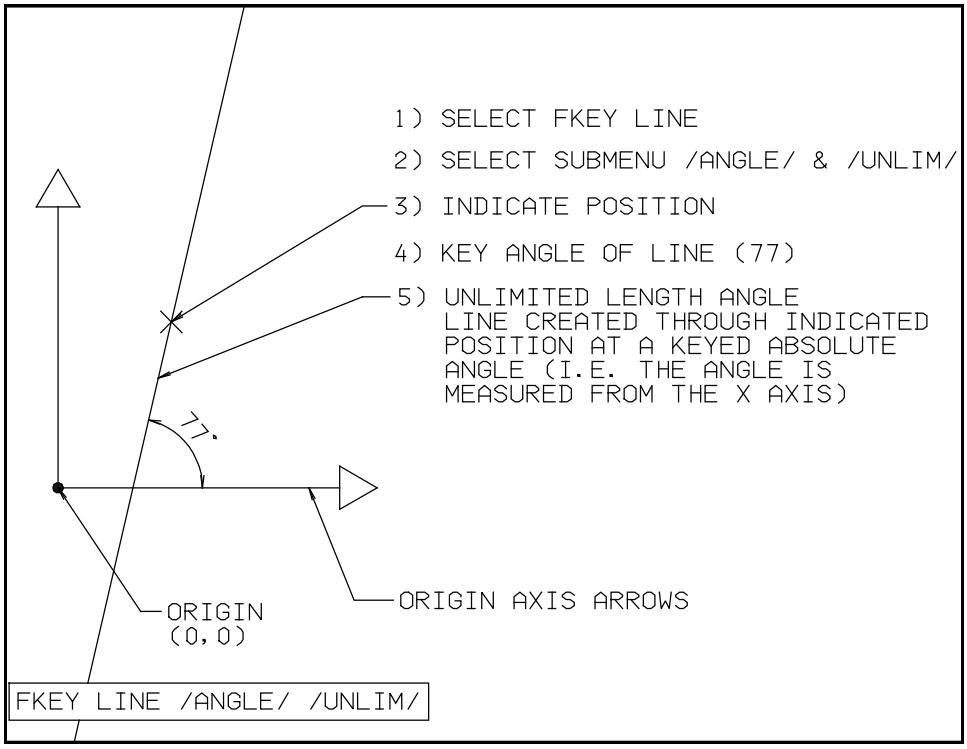

Figure 71 Example for an unlimited length angle line drawn through an indicated location at an angle that is measured from the X axis (NODE PATH A,B,F,H)

To create this line follow these steps:

STEP NO.	ACTION / RESULT	MENU PROMPT (BEFORE THE ACTION) (2nd line from top of screen)	NODE NO.
1	**SELECT Fkey LINE**		**A**
2	**SELECT submenu /ANGLE/ and /UNLIM/ (If they are not already underlined)**		**A**
3	**INDICATE approximate location**	**Key X,Y / Ind point / Sel element**	**B**
4	**KEY angle of the line (77)**	**Sel line / Key angle = 98 , 0, 59 (Note: The actual number displayed here will reflect the last number keyed in)**	**F**
5	**An unlimited length angle line is created through the INDICATED position at a keyed absolute angle (i.e. the angle is measured from the X axis)**	**Key X,Y / Ind point / Sel element / YN erase-restore**	**H**

3) AN UNLIMITED LENGTH ANGLE LINE DRAWN THROUGH A POINT AT AN ANGLE THAT IS MEASURED FROM THE X AXIS:

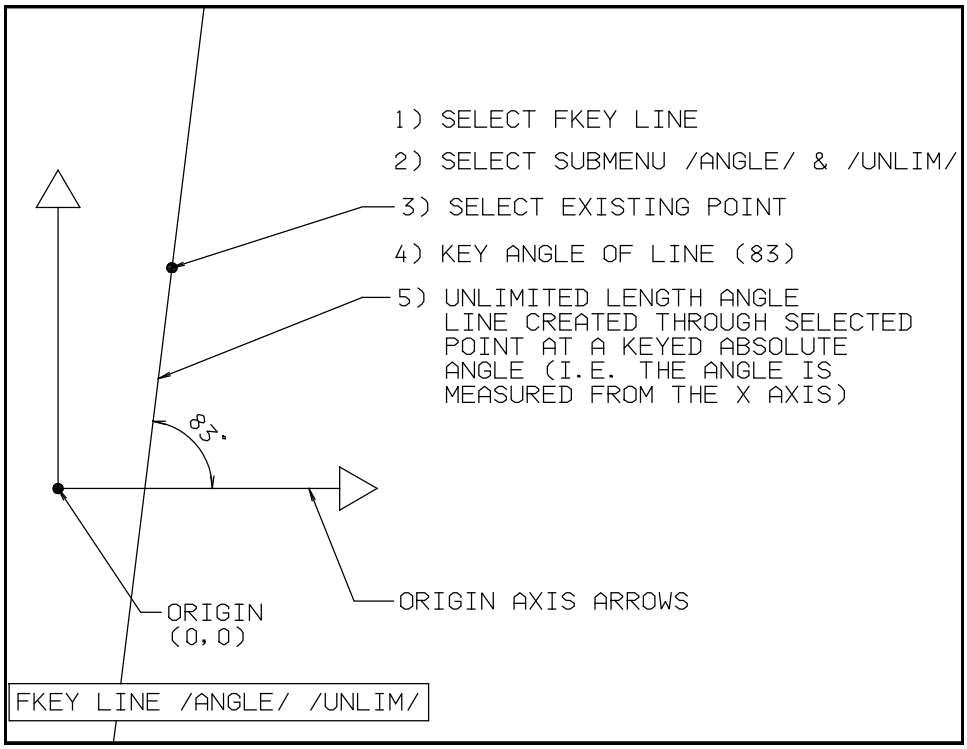

Figure 72 Example for an unlimited length angle line drawn through a point at an angle that is measured from the X axis (NODE PATH A,B,I,QQ,K)

To create this line follow these steps:

STEP NO.	ACTION / RESULT	MENU PROMPT (BEFORE THE ACTION) (2nd line from top of screen)	NODE NO.
1	**SELECT Fkey LINE**		**A**
2	**SELECT submenu /ANGLE/ and /UNLIM/ (If they are not already underlined)**		**A**
3	**SELECT existing point**	**Key X,Y / Ind point / Sel element**	**I**
4	**KEY angle of line (83)**	**Sel line / Key angle = 66, 30, 0 (Note: the actual number displayed here will reflect the last number keyed in)**	**QQ**
5	**An unlimited length angle line is created through the SELECTED point at a keyed absolute angle (i.e. the angle is measured from the X axis)**	**Key X,Y / Ind point / Sel element / YN erase-restore**	**K**

4A) AN UNLIMITED LENGTH ANGLE LINE DRAWN TANGENT TO A CIRCLE AT AN ANGLE MEASURED FROM THE X AXIS:

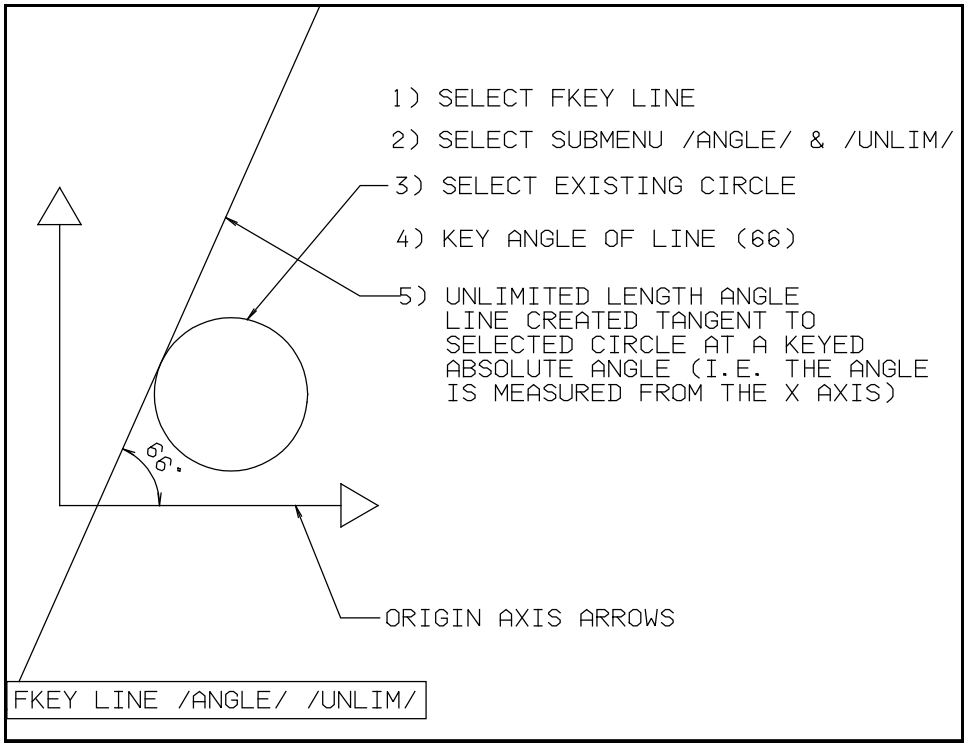

Figure 73 Example for an unlimited length angle line drawn tangent to a circle at an angle that is measured from the X axis (NODE PATH A,B,I,RR,M)

To create this line follow these steps:

STEP NO.	ACTION / RESULT	MENU PROMPT (BEFORE THE ACTION) (2nd line from top of screen)	NODE NO.
1	**SELECT Fkey LINE**		**A**
2	**SELECT submenu /ANGLE/ and /UNLIM/ (If they are not already underlined)**		**A**
3	**SELECT left half of existing circle**	**Key X,Y / Ind point / Sel element**	**I**
4	**KEY angle of line (66)**	**Sel line / Key angle = 77, 0, 0 (Note: The actual number displayed here will reflect the last number keyed in)**	**RR**
5	**An unlimited length angle line is created tangent to the left half of the selected circle at a keyed absolute angle (i.e. the angle is measured from the X axis)**	**Key X,Y / Ind pt / Sel elem / YN erase-restore**	**M**

4B) AN UNLIMITED LENGTH ANGLE LINE DRAWN TANGENT TO A CIRCLE AT AN ANGLE MEASURED RELATIVE TO ANOTHER LINE:

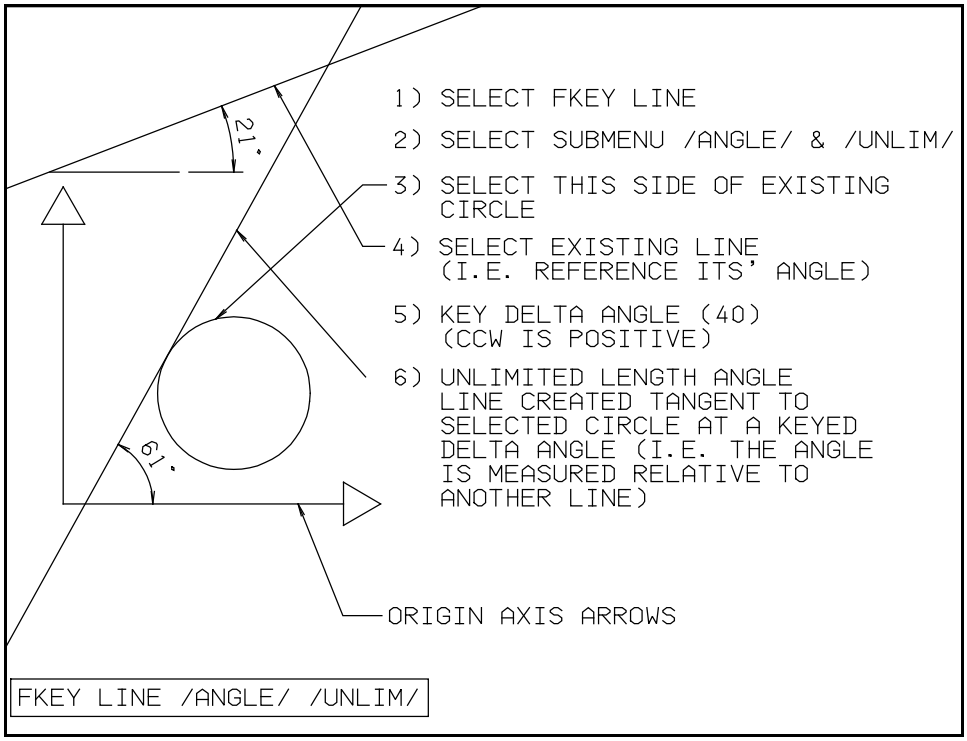

Figure 74 Example for an unlimited length angle line drawn tangent to a circle at an angle measured relative to another line (NODE PATH A,B,I,RR,L,M)

To create this line follow these steps:

STEP NO.	ACTION / RESULT	MENU PROMPT (BEFORE THE ACTION) (2nd line from top of screen)	NODE NO.
1	SELECT Fkey LINE		A
2	SELECT submenu /ANGLE/ and /UNLIM/ (If they are not already underlined)		A
3	SELECT left half of existing circle	Key X,Y / Ind point / Sel element	I
4	SELECT an existing line (i.e. reference its' angle)	Sel line / Key angle = 55, 0, 0 (Note: The actual number displayed here will reflect the last number keyed in)	RR
5	KEY delta angle (40) (CCW is positive)	Key delta angle = 15, 0, 0 (Note: The actual number displayed here will reflect the last number keyed in)	L

STEP NO.	ACTION / RESULT	MENU PROMPT (BEFORE THE ACTION) (2nd line from top of screen)	NODE NO.
6	An unlimited length angle line is created tangent to the left half of the selected circle at a keyed delta angle (i.e. the angle is measured relative to another line)	Key X,Y / Ind point / Sel element / YN erase-restore	M

5A) A FIXED LENGTH ANGLE LINE STARTING AT A POINT WITH A KEYED LENGTH IN AN INDICATED DIRECTION AT AN ANGLE THAT IS MEASURED FROM THE X AXIS:

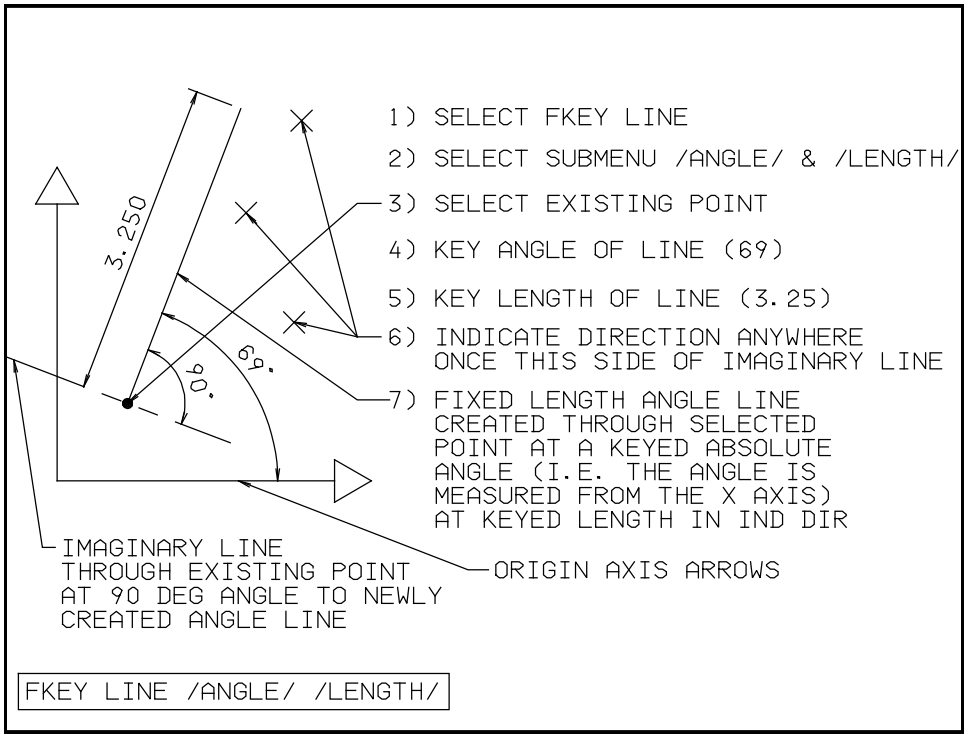

Figure 75 Example for a fixed lg angle line starting at a pt with a keyed lg in an ind dir at an angle that is measured from the X axis (NODE PATH A,X,Y,AA,CC,EE,FF,GG)

To create this line follow these steps:

STEP NO.	ACTION / RESULT	MENU PROMPT (BEFORE THE ACTION) (2nd line from top of screen)	NODE NO.
1	**SELECT Fkey LINE**		**A**
2	**SELECT submenu /ANGLE/ and /LENGTH/ (If they are not already underlined)**		**A**
3	**SELECT existing point. This is the starting point for the line.**	**Key X,Y / Ind point / Sel element**	**Y**
4	**KEY angle of the line (e.g. 69)**	**Sel line / Key angle = 26, 0, 0 (Note: The actual number displayed here will reflect the last number keyed in)**	**CC**
5	**KEY length of line (e.g. 3.25)**	**Key length = 5.750 / Sel element for limit (Note: Key length number reflects the last number entered)**	**EE**

STEP NO.	ACTION / RESULT	MENU PROMPT (BEFORE THE ACTION) (2nd line from top of screen)	NODE NO.
6	INDICATE direction once anywhere one side of the imaginary line. This determines the direction the line will go.	Ind direction	FF
7	A fixed length angle line is created from the selected point. Its' length is the keyed in length, its' direction is in the indicated direction and it runs at an angle keyed in and measured from the X axis	Key X,Y / Ind pt / Sel elem / YN erase-restore	GG

5B) A FIXED LENGTH ANGLE LINE STARTING AT A POINT, AT AN ANGLE MEASURED FROM THE X AXIS, AND CONTINUING UNTIL IT CROSSES ANOTHER ELEMENT :

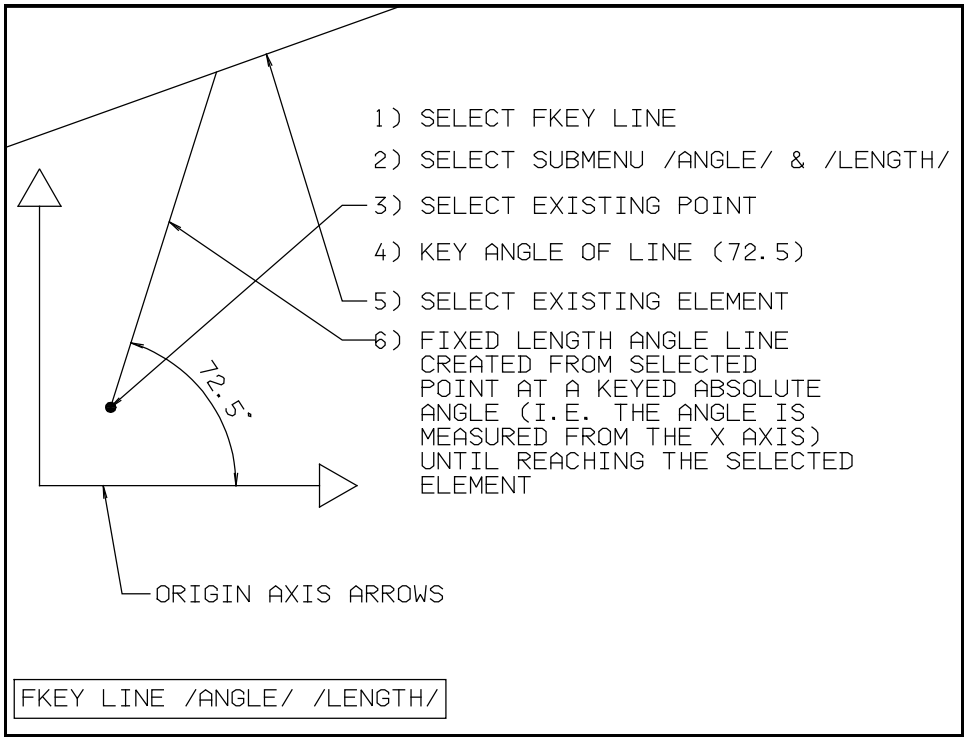

Figure 76 Example for a fixed lg angle line starting at a pt, at an angle measured from the X axis, and running until it crosses another element
(NODE PATH A,X,Y,AA,CC,EE,GG)

To create this line follow these steps:

STEP NO.	ACTION / RESULT	MENU PROMPT (BEFORE THE ACTION) (2nd line from top of screen)	NODE NO.
1	**SELECT Fkey LINE**		**A**
2	**SELECT submenu /ANGLE/ and /LENGTH/ (If they are not already underlined)**		**A**
3	**SELECT existing point. This is the starting point for the line.**	**Key X,Y / Ind point / Sel element**	**Y**
4	**KEY angle of the line (e.g. 72.5)**	**Sel line / Key angle = 77, 0, 0 (Note: The Actual number displayed here will reflect the last number keyed in)**	**CC**
5	**SELECT existing element. The line will end at this element.**	**Key length = 1.3125 / Sel any element for limit (Note: Key length number reflects the last number entered)**	**EE**

STEP NO.	ACTION / RESULT	MENU PROMPT (BEFORE THE ACTION) (2nd line from top of screen)	NODE NO.
6	A fixed length angle line is created starting at the existing point, at a keyed absolute angle (i.e.the angle is measured from the X axis) until reaching the selected element	Key X,Y / Ind point / Sel element / YN erase-restore	GG

5C) A FIXED LENGTH ANGLE LINE STARTING TANGENT TO A CIRCLE, AT AN ANGLE THAT IS MEASURED FROM THE X AXIS, WITH A KEYED LENGTH AND RUNNING IN AN INDICATED DIRECTION:

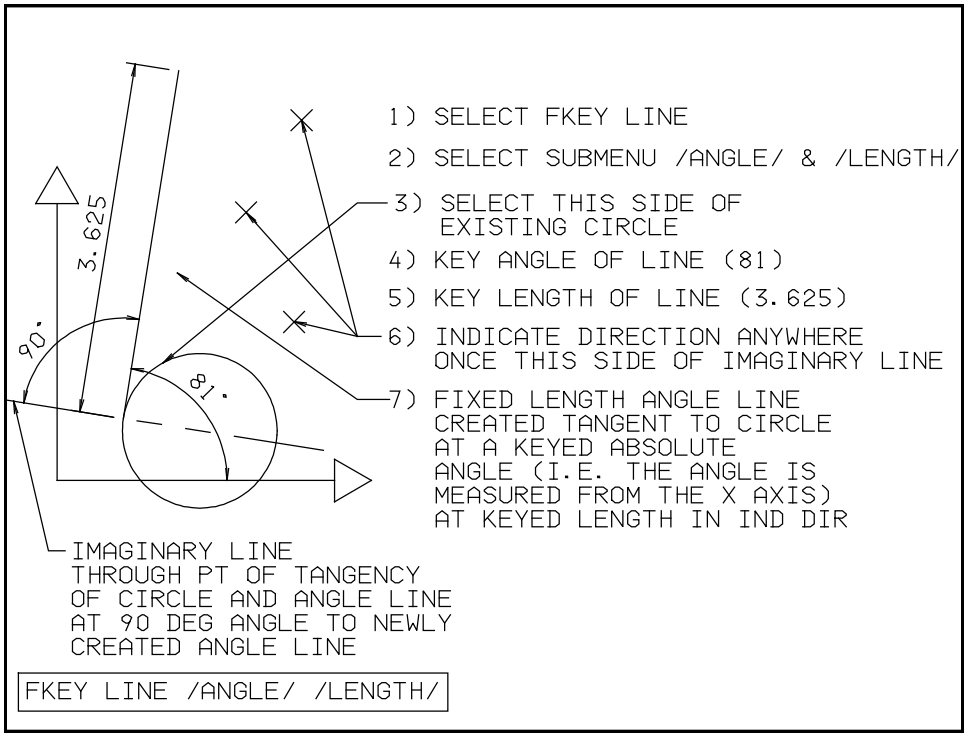

Figure 77 Ex for a fixed lg angle line tangent to a circle with a keyed lg at an angle measured from the X axis and running in an ind dir
(NODE PATH A,X,Y,AA,CC,EE,FF,GG)

To create this line follow these steps:

STEP NO.	ACTION / RESULT	MENU PROMPT (BEFORE THE ACTION) (2nd line from top of screen)	NODE NO.
1	**SELECT Fkey LINE**		**A**
2	**SELECT submenu /ANGLE/ and /LENGTH/ (If they are not already underlined)**		**A**
3	**SELECT existing circle. The line will start tangent to this circle on the side of the circle selected**	**Key X,Y / Ind point / Sel element**	**Y**
4	**KEY angle of the line (e.g. 81)**	**Sel line / Key angle = 26, 0, 0 (Note: The actual number displayed here will reflect the last number keyed in)**	**CC**
5	**KEY length (e.g. 3.625). This will be the length of the line.**	**Key length = 3.75000 / Sel any element for limit (Note: Key length number reflects last number entered)**	**EE**

STEP NO.	ACTION / RESULT	MENU PROMPT (BEFORE THE ACTION) (2nd line from top of screen)	NODE NO.
6	INDICATE direction once anywhere one side of imaginary line.	Ind direction	FF
7	A fixed length angle line is created tangent to an existing circle and extending for a keyed length in the indicated direction at a keyed absolute angle (i.e. the angle is measured from the X axis)	Key X,Y / Ind point / Sel element / YN erase restore	GG

5D) A FIXED LENGTH ANGLE LINE STARTING TANGENT TO A CIRCLE, AT AN ANGLE THAT IS MEASURED RELATIVE TO ANOTHER LINE, WITH A KEYED LENGTH AND RUNNING IN AN INDICATED DIRECTION:

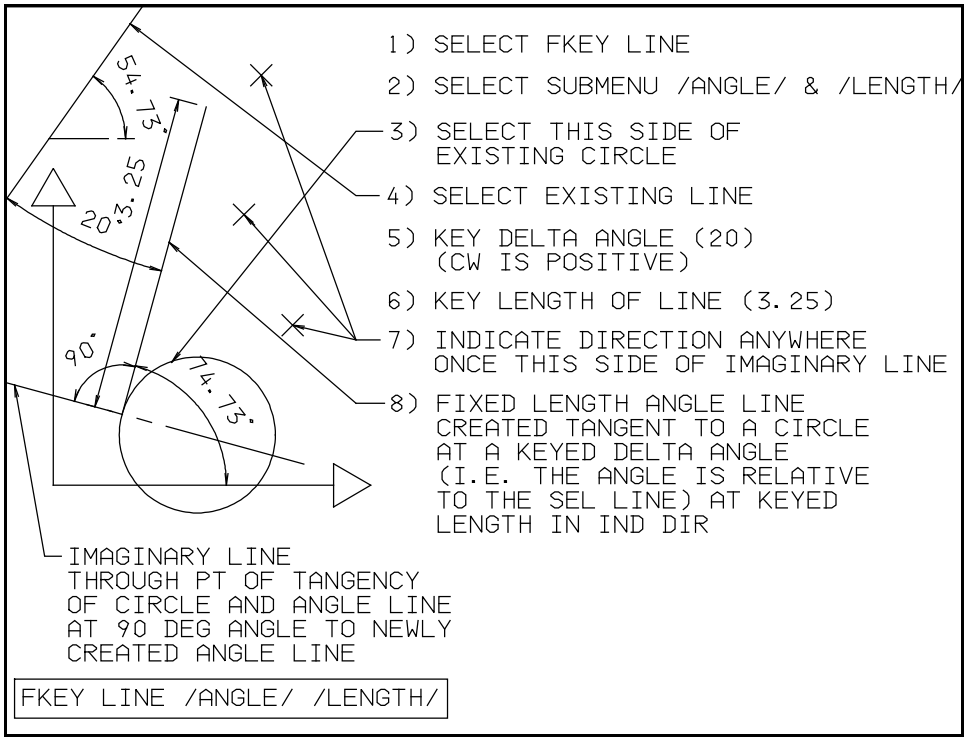

Figure 78 Ex for a fixed lg angle line tang to a circle with a keyed lg and running in an ind dir with angle measured rel to another line
(NODE PATH A,X,Y,AA,CC,DD,EE,FF,GG)

To create this line follow these steps:

STEP NO.	ACTION / RESULT	MENU PROMPT (BEFORE THE ACTION) (2nd line from top of screen)	NODE NO.
1	**SELECT Fkey LINE**		**A**
2	**SELECT submenu /ANGLE/ and /LENGTH/ (If they are not already underlined)**		**A**
3	**SELECT existing circle. The line will start tangent to this circle on the side of the circle selected**	**Key X,Y / Ind point / Sel element**	**Y**
4	**SELECT an existing line**	**Sel line / Key angle = 66, 0, 0 (Note: The actual number displayed here will reflect the last number keyed in)**	**CC**
5	**KEY delta angle (e.g. 20) (CW is positive)**	**Key delta angle = 5, 0, 0**	**DD**

STEP NO.	ACTION / RESULT	MENU PROMPT (BEFORE THE ACTION) (2nd line from top of screen)	NODE NO.
6	KEY length of the line (e.g. 3.25)	Key length = 3.75000 / Sel any element (Note: Key length number reflects last number entered)	EE
7	INDICATE direction once anywhere one side of imaginary line.	Ind direction	FF
8	A fixed length angle line is created tangent to an existing circle and extending for a keyed in length in the indicated direction at a delta angle (i.e. the angle is relative to the selected line)	Key X,Y / Ind point / Sel element / YN erase restore	GG

6A) AN ANGLE CENTER LINE WHICH IS CENTERED ON A POINT, AT AN ANGLE MEASURED FROM THE X AXIS:

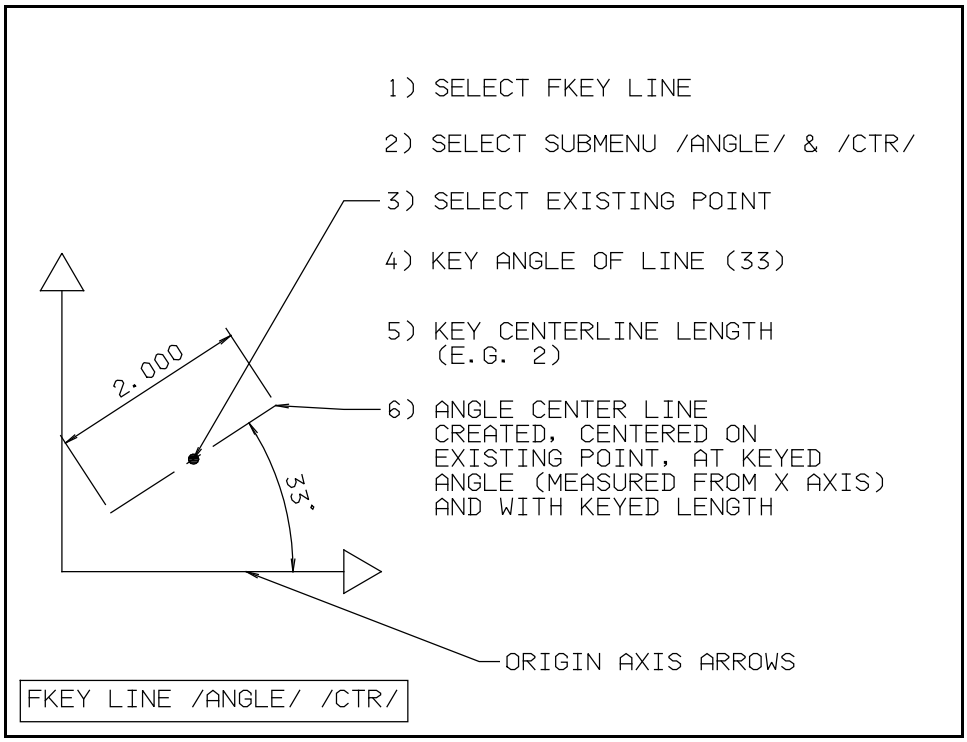

Figure 79 Example for a angle center line centered on a point with an angle measured from the X axis (NODE PATH A,HH,II,KK,MM,OO,PP)

To create this line follow these steps:

STEP NO.	ACTION / RESULT	MENU PROMPT (BEFORE THE ACTION) (2nd line from top of screen)	NODE NO.
1	SELECT Fkey LINE		A
2	SELECT submenu /ANGLE/ and /CTR/ (If they are not already underlined)		A
3	SELECT existing point.	Key X,Y / Ind point / Sel element	II
4	KEY angle of line (e.g. 33)	Sel line / Key angle = 74, 43, 34	MM
5	KEY center line length (e.g. 2). This will be the total length of the center line.	Key length = 3.500 (Note: Key length number reflects last number entered)	OO

STEP NO.	ACTION / RESULT	MENU PROMPT (BEFORE THE ACTION) (2nd line from top of screen)	NODE NO.
6	An angle center line is created centered on an existing point at a keyed angle (measured from the X axis) and with a keyed length	Key X,Y / Ind point / Sel element / YN erase-restore	PP

FKey LINE

SUBMENU / ANGLE /

ADVANCED

SECTION

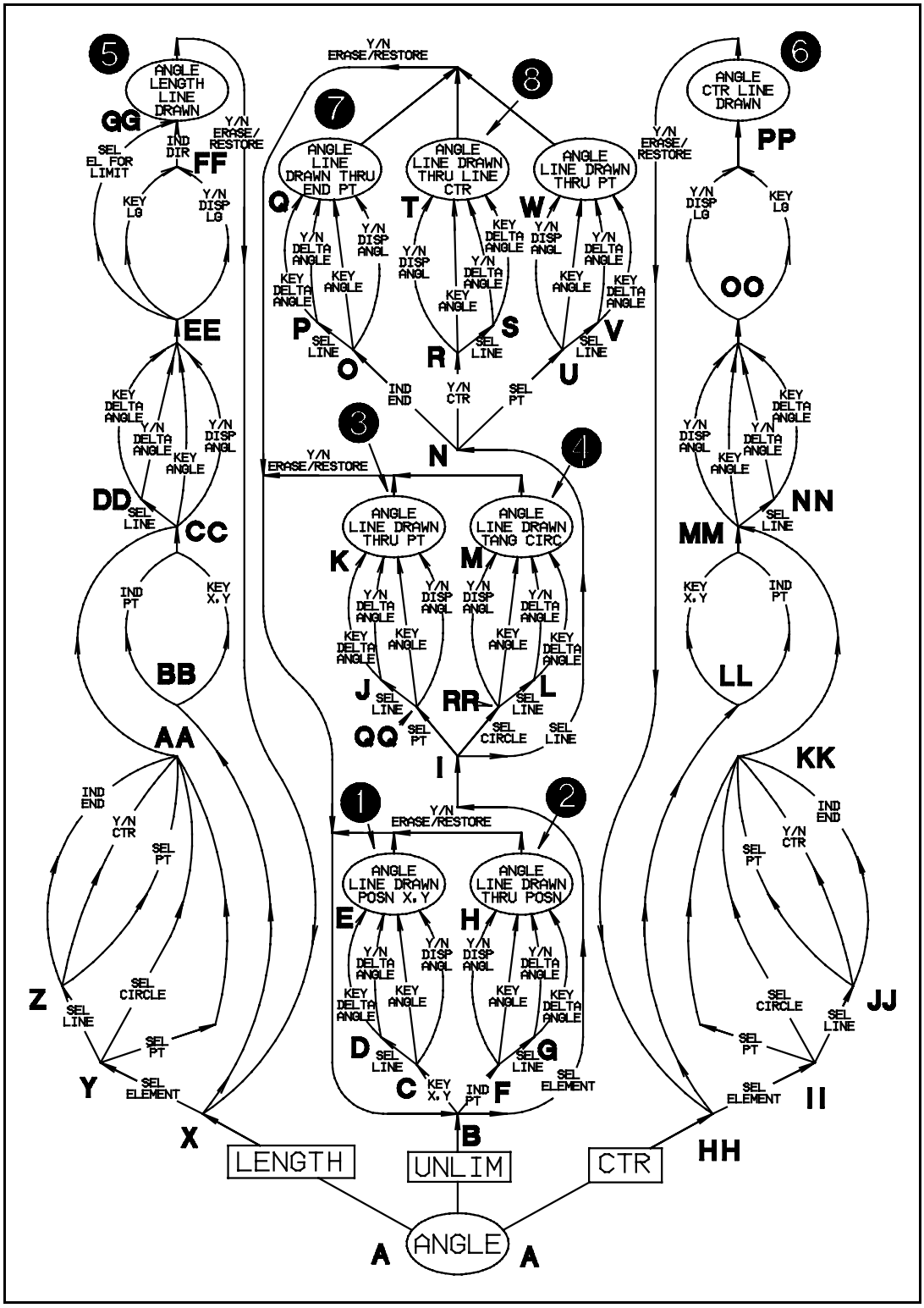

Figure 80 Advanced Road Map for Angle Line

7) AN UNLIMITED LENGTH ANGLE LINE DRAWN THROUGH THE END OF ANOTHER LINE AT AN ANGLE THAT IS MEASURED FROM THE X AXIS:

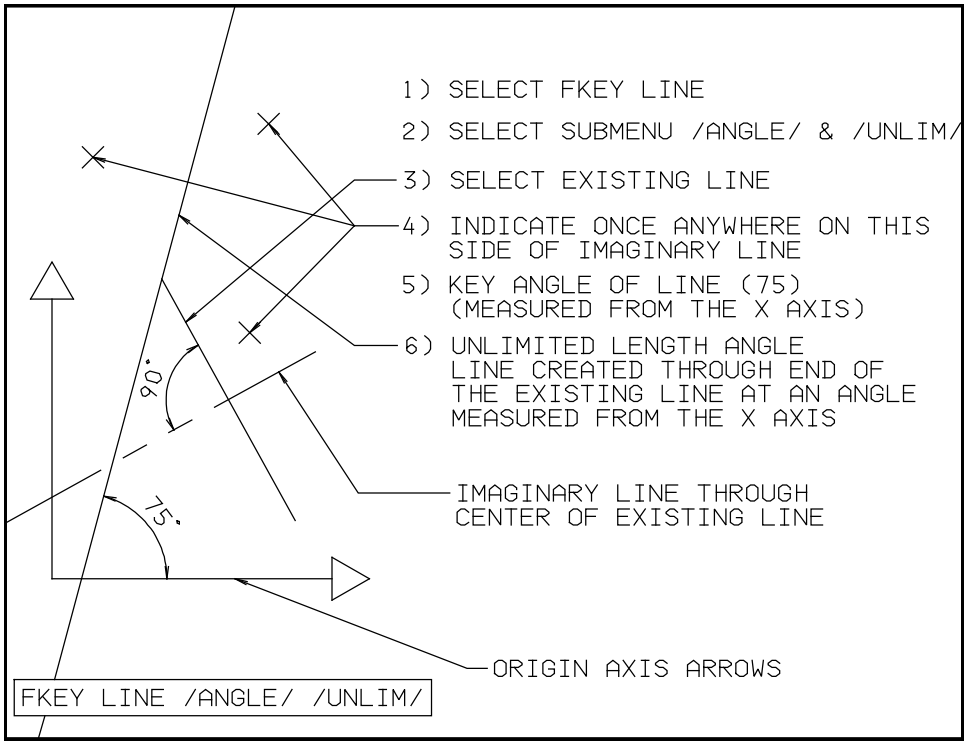

Figure 81 Example for an unlimited length angle line drawn through the end point of another line, at an angle measured from the X axis (NODE PATH A,B,I,N,O,Q)

To create this line follow these steps:

STEP NO.	ACTION / RESULT	MENU PROMPT (BEFORE THE ACTION) (2nd line from top of screen)	NODE NO.
1	**SELECT Fkey LINE**		**A**
2	**SELECT submenu /ANGLE/ and /UNLIM/ (If they are not already underlined)**		**A**
3	**SELECT an existing line**	**Key X,Y / Ind point / Sel element**	**I**
4	**INDICATE once anywhere on one side of the imaginary line**	**Ind end / YN center / Sel point**	**N**
5	**KEY angle of the line (e.g. 75) This angle is absolute and is measured from the X axis**	**Sel line / Key angle = 33, 0, 0 (Note: The actual number displayed here will reflect the last number keyed in)**	**O**

STEP NO.	ACTION / RESULT	MENU PROMPT (BEFORE THE ACTION) (2nd line from top of screen)	NODE NO.
6	An unlimited length angle line is created through the end of the existing line and angle to the line selected in step No. 5.	Key X,Y / Ind point / Sel element / YN erase-restore	Q

8) AN UNLIMITED LENGTH ANGLE LINE DRAWN THROUGH THE MIDDLE OF ANOTHER LINE AT AN ANGLE THAT IS MEASURED FROM THE X AXIS:

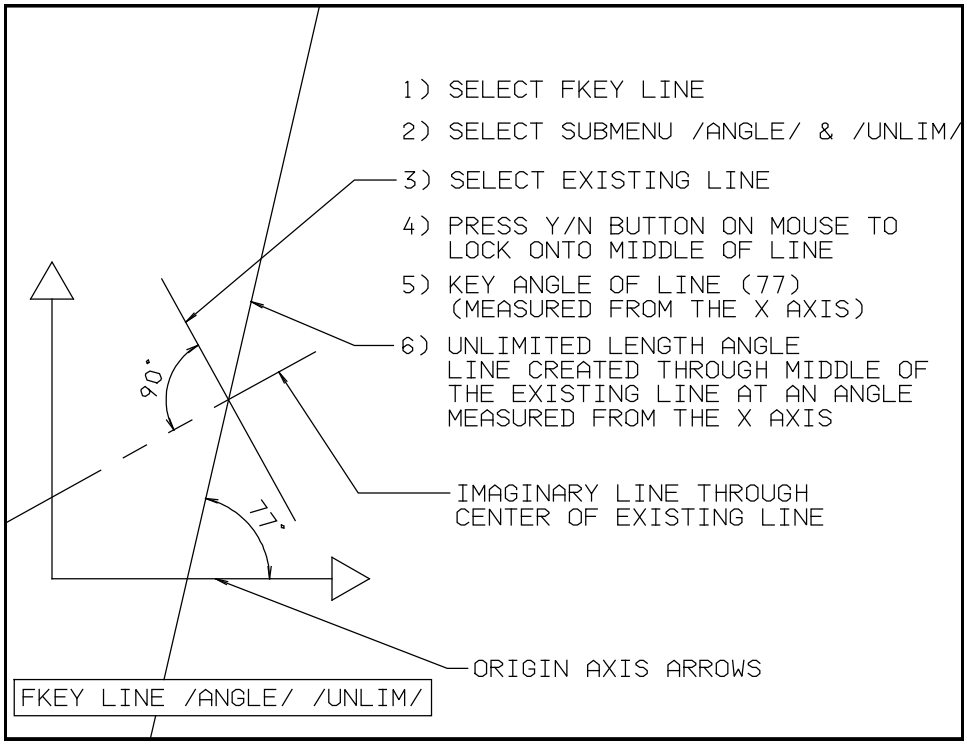

Figure 82 Example for an unlimited length angle line drawn through the middle of another line, at an angle measured from the X axis (NODE PATH A,B,I,N,R,T)

To create this line follow these steps:

STEP NO.	ACTION / RESULT	MENU PROMPT (BEFORE THE ACTION) (2nd line from top of screen)	NODE NO.
1	**SELECT Fkey LINE**		**A**
2	**SELECT submenu /ANGLE/ and /UNLIM/ (If they are not already underlined)**		**A**
3	**SELECT an existing line**	**Key X,Y / Ind point / Sel element**	**I**
4	**Press YN button on mouse to lock onto the middle of the selected line**	**Ind end / YN center / Sel point**	**N**
5	**KEY angle of the line (e.g. 77) This angle is absolute and is measured from the X axis**	**Sel line / Key angle = 45, 0, 0 (Note: The actual number displayed here will reflect the last number keyed in)**	**R**

STEP NO.	ACTION / RESULT	MENU PROMPT (BEFORE THE ACTION) (2nd line from top of screen)	NODE NO.
6	An unlimited length angle line is created through the middle of the existing line at the angle keyed in (77)	Key X,Y / Ind point / Sel element / YN erase-restore	T

5E) A FIXED LENGTH ANGLE LINE DRAWN THROUGH THE END OF ANOTHER LINE AT AN ANGLE MEASURED FROM THE X AXIS:

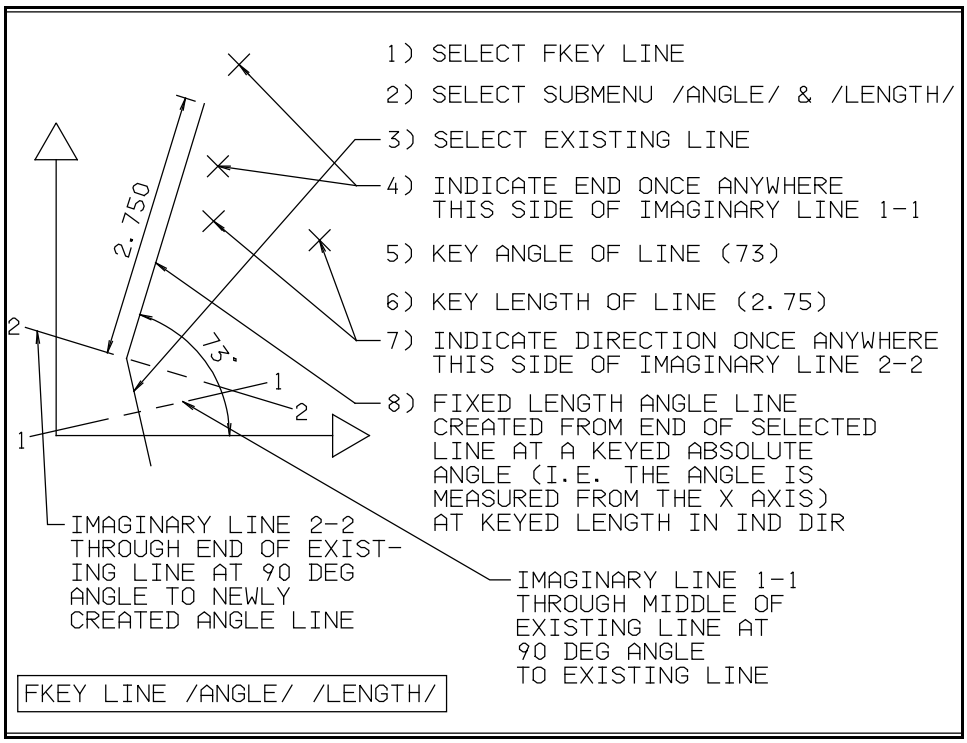

Figure 83 Example for a fixed length angle line drawn through the end point of another line, at an angle measured from the X axis (NODE PATH A,X,Y,Z,AA,CC,EE,FF,GG)

To create this line follow these steps:

STEP NO.	ACTION / RESULT	MENU PROMPT (BEFORE THE ACTION) (2nd line from top of screen)	NODE NO.
1	**SELECT Fkey LINE**		**A**
2	**SELECT submenu /ANGLE/ and /LENGTH/ (If they are not already underlined)**		**A**
3	**SELECT an existing line**	**Key X,Y / Ind point / Sel element**	**Y**
4	**INDICATE direction once anywhere one side of imaginary line 1-1 to lock onto line end**	**Ind end / YN center / Sel point**	**Z**
5	**KEY line angle (e.g. 73)**	**Sel line / Key angle = 74, 43, 34 (Note: The actual number displayed here will reflect the last number keyed in)**	**CC**

STEP NO.	ACTION / RESULT	MENU PROMPT (BEFORE THE ACTION) (2nd line from top of screen)	NODE NO.
6	KEY line length (e.g. 2.75)	Key length = 1.750 / Sel element for limit (Note: The actual number displayed here will be the last number keyed in	EE
7	INDICATE direction of fixed length line once anywhere one side of imaginary line 2-2	Ind direction	FF
8	A fixed length angle line is created from the end of the existing line with the keyed length (2.75) in the indicated direction and angle (73)	Key X,Y / Ind point / Sel element / YN erase-restore	GG

6B) AN ANGLE CENTER LINE DRAWN THROUGH THE END OF ANOTHER LINE AT AN ANGLE MEASURED FROM THE X AXIS:

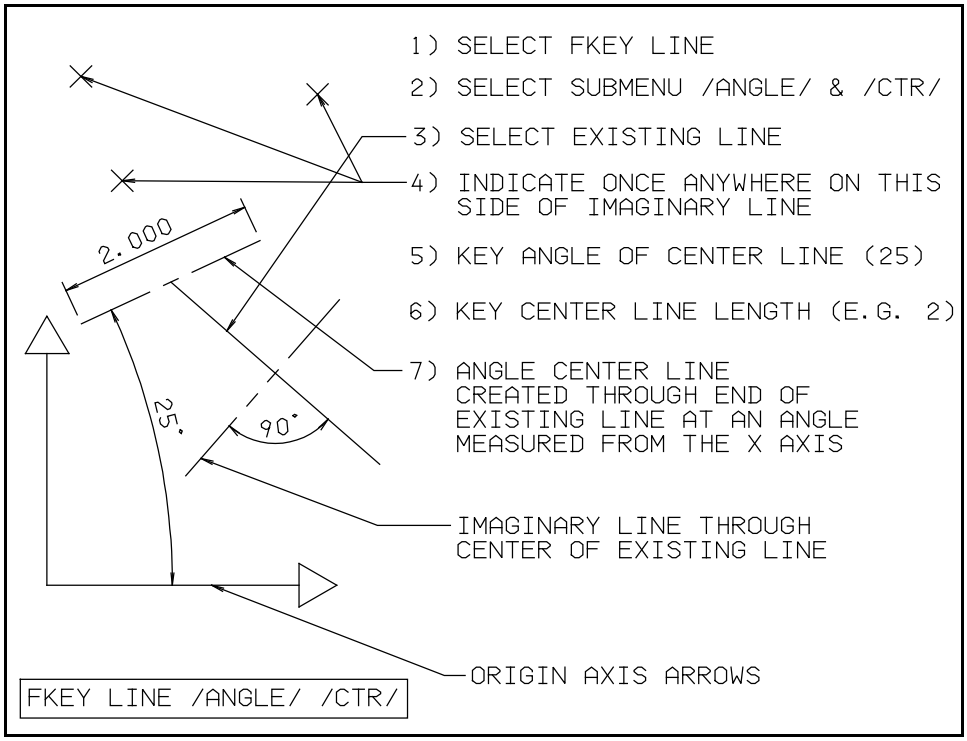

Figure 84 Example for an angle center line drawn through the end of another line, at an angle measured from the X axis (NODE PATH A,HH,II,JJ,KK,MM,OO,PP)

To create this line follow these steps:

STEP NO.	ACTION / RESULT	MENU PROMPT (BEFORE THE ACTION) (2nd line from top of screen)	NODE NO.
1	SELECT Fkey LINE.		A
2	SELECT submenu /ANGLE/ and /CTR/ (If they are not already underlined).		A
3	SELECT an existing line.	Key X,Y / Ind point / Sel element	II
4	INDICATE once anywhere on one side of the imaginary line.	Ind end / YN center / Sel point	JJ
5	KEY angle of center line (e.g. 25)	Sel line / Key angle = 73, 0, 0 (Note: The actual number displayed here will reflect the last number keyed in)	MM
6	KEY center line length (e.g. 2 for 2") This is the overall length of the center line.	Key length = 3.000 / Sel any element (Note: The actual number displayed here will be the last number keyed in)	OO

STEP NO.	ACTION / RESULT	MENU PROMPT (BEFORE THE ACTION) (2nd line from top of screen)	NODE NO.
7	An angle center line is created through the end of the existing line, at the keyed in length and at the keyed in angle	Key X,Y / Ind point / Sel element / YN erase-restore	PP

6C) AN ANGLE CENTER LINE DRAWN THROUGH THE MIDDLE OF ANOTHER LINE, AT AN ANGLE MEASURED FROM THE X AXIS:

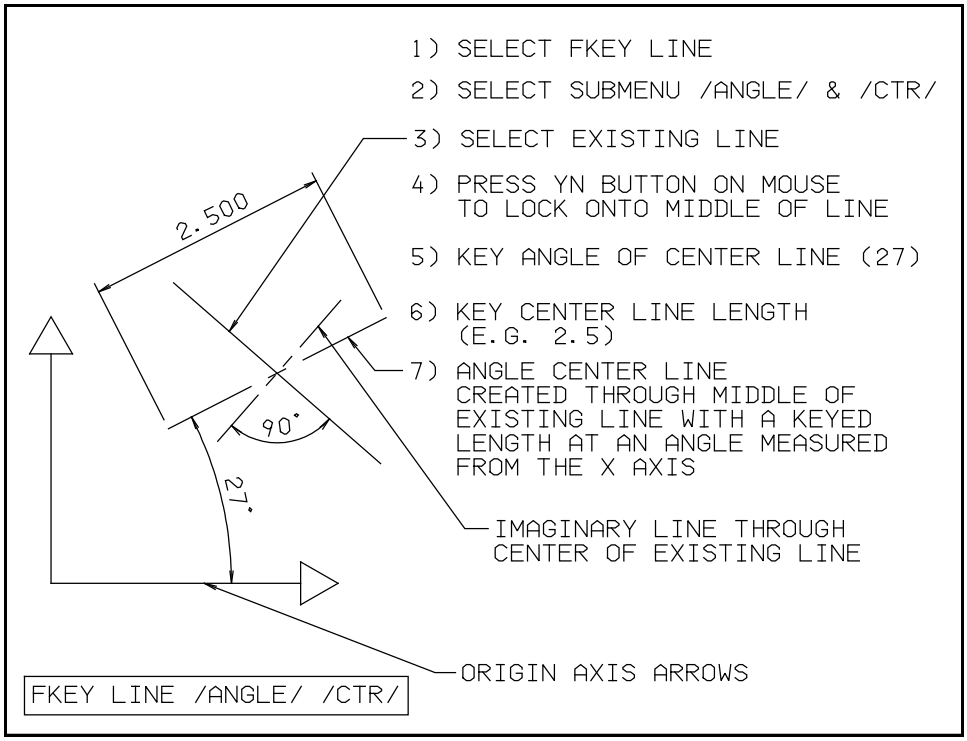

Figure 85 Example for an angle center line drawn through the middle point of another line, at an angle measured from the X axis (NODE PATH A,HH,II,JJ,KK,MM,OO,PP)

To create this line follow these steps:

STEP NO.	ACTION / RESULT	MENU PROMPT (BEFORE THE ACTION) (2nd line from top of screen)	NODE NO.
1	SELECT Fkey LINE		A
2	SELECT submenu /ANGLE/ and /CTR/ (If they are not already underlined)		A
3	SELECT existing line.	Key X,Y / Ind point / Sel element	BB
4	PRESS the YN button on the mouse to lock onto the middle of the existing line.	Ind end / YN center / Sel point	II
5	KEY angle of center line (e.g. 27)	Sel line / Key angle = 73, 0, 0 (Note: The actual number displayed here will reflect the last number keyed in)	EE
6	KEY the center line length (e.g. 2.5)	Key length = 3.000 / Sel any element (Note: The actual number displayed here will be the last number keyed in)	FF

STEP NO.	ACTION / RESULT	MENU PROMPT (BEFORE THE ACTION) (2nd line from top of screen)	NODE NO.
7	A angle center line is created through the middle of the existing line with a length and angle keyed in	Key X,Y / Ind point / Sel element / YN erase-restore	GG

All menus in Micro CADAM are intelligent. They anticipate your actions wherever possible. The results depend on the sequence that the **SELECT, INDICATE, KEY** and **Y/N** keys are pressed. This is summarized for FKey LINE / ANGLE / and shown in chart form below:

FKEY LINE /ANGLE/ ACTION SUMMARY

LINE NO.	TO CREATE	1ST ACTION	2ND ACTION	3RD ACTION	4TH ACTION	5TH ACTION	NODEPATH
BEGINNER SECTION							
1A	An unlimited length angle line drawn through a position X,Y at an angle that is measured from the X axis	Key X,Y	KEY angle				A,B,C,E
1B	An unlimited length angle line drawn through a position X,Y at an angle that is measured relative to another line	KEY X,Y	SEL line	KEY delta			A,B,C,D,E
2	An unlimited length angle line drawn through an indicated location at an angle that is measured from the X axis	IND position	KEY angle				A,B,F,H
3	An unlimited length angle line drawn through a point at an angle that is measured from the X axis	SEL Pt	KEY angle				A,I,QQ,K
4A	An unlimited length angle line drawn tangent to a circle at an angle that is measured from the X axis	SEL Circle	KEY angle				A,I,RR,M
4B	An unlimited length angle line drawn tangent to a circle at an angle that is measured relative to another line	SEL Circle	SEL line	KEY delta			A,I,RR,L,M
5A	A fixed length angle line starting at a point with a keyed length in an indicated direction at an angle that is measured from the X axis	SEL Pt	KEY angle	KEY length	IND direction		A,Y,CC,EE,FF,GG
5B	A fixed length angle line starting at a point, at an angle that is measured from the X axis, and continuing until it crosses another element	SEL Pt	KEY angle	SEL element			A,Y,CC,EE,GG
5C	A fixed length angle line starting tangent to a circle, at an angle that is measured from the X axis, with a keyed length and running in an indicated direction	SEL Circle	KEY angle	KEY length	IND direction		A,Y,CC,EE,FF,GG

LINE NO.	TO CREATE	1ST ACTION	2ND ACTION	3RD ACTION	4TH ACTION	5TH ACTION	NODEPATH
5D	A fixed length angle line starting tangent to a circle, at an angle that is measured relative to another line, with a keyed length and running in an indicated direction	SEL Circle	SEL line	KEY delta	KEY length	IND direction	A,Y,CC,DD,EE,FF,GG
6A	An angle center line which is centered on a point at an angle measured from the X axis	SEL Pt	KEY angle	KEY center line length			A,II,MM,OO,PP
ADVANCED SECTION							
7	An unlimited length angle line drawn through the end of another line, at an angle that is measured from the X axis	SEL Line	IND End	KEY angle			A,I,N,O,Q
8	An unlimited length angle line drawn through the middle of another line, at an angle that is measured from the X axis	SEL Line	Y/N Center	KEY angle			A,I,N,R,T
5E	A fixed length line drawn through the end point of another line, at an angle that is measured from the X axis	SEL Line	IND End	KEY angle	KEY Line length	IND Direction	A,Y,Z,CC,EE,FF,GG
6B	An angle center line drawn through the end of another line, at an angle measured from the X axis	SEL Line	IND end	KEY angle	KEY center line length		A,II,JJ,MM,OO,PP
6C	An angle center line drawn through the middle of another line, at an angle measured from the X axis	SEL Line	Y/N Center	KEY angle	KEY center line length		A,II,JJ,MM,OO,PP

FKey LINE

SUBMENU / PT-PT /

Fkey LINE submenu /PT-PT/ allows you to draw fixed length or unlimited length pt-pt lines or extension lines. Each line has been assigned a line number. The same line number is also referenced on the Line Road Map and the Action Summary. The different ways to draw pt-pt lines are divided into beginner and advanced sections and are listed with page numbers as follows:

BEGINNER: (See Figure 86 on Page 12-164 for the Beginner Road Map for Pt-Pt Line)

PT-PT LINE NO.	DESCRIPTION	PAGE NO.
1A	A fixed length pt-pt line drawn between two X,Y positions	12-165
1B	A fixed length pt-pt line drawn between two indicated positions	12-166
1C	A fixed length pt-pt line drawn between two points	12-167
1D	A fixed length pt-pt line drawn tangent to two circles	12-168
1E	A fixed length pt-pt line drawn from one point tangent to a circle	12-169
1F	A chain of fixed length pt-pt lines created by connecting a series of pts	12-170
2A	An unlimited length pt-pt line drawn through two points	12-172
2B	An unlimited length pt-pt line drawn tangent to two circles	12-173

ADVANCED: (See Figure 95 on Page 12-176 for the Advanced Road Map for Pt-Pt Line)

PT-PT LINE NO.	DESCRIPTION	PAGE NO.
1G	A fixed length pt-pt line drawn from the middle of one line to the end of another line	12-177
2C	An unlimited length pt-pt line drawn between the middle of two lines	12-179
3	A fixed length pt-pt extension line drawn between two points	12-181

FKey LINE

SUBMENU / PT-PT /

BEGINNER

SECTION

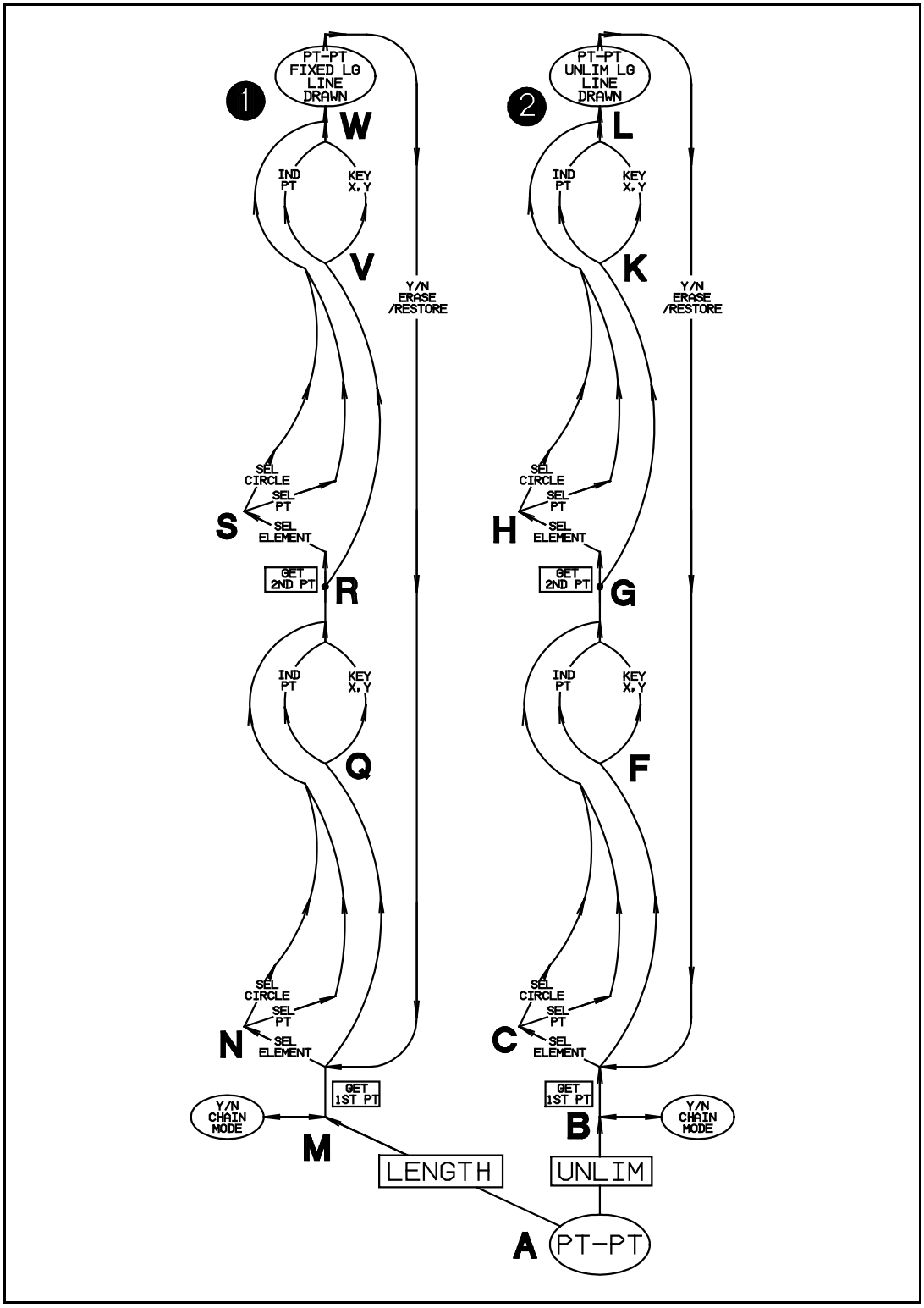

Figure 86 Beginner Road Map for Angle Line

1A) A FIXED LENGTH PT-PT LINE DRAWN BETWEEN TWO X,Y POSITIONS:

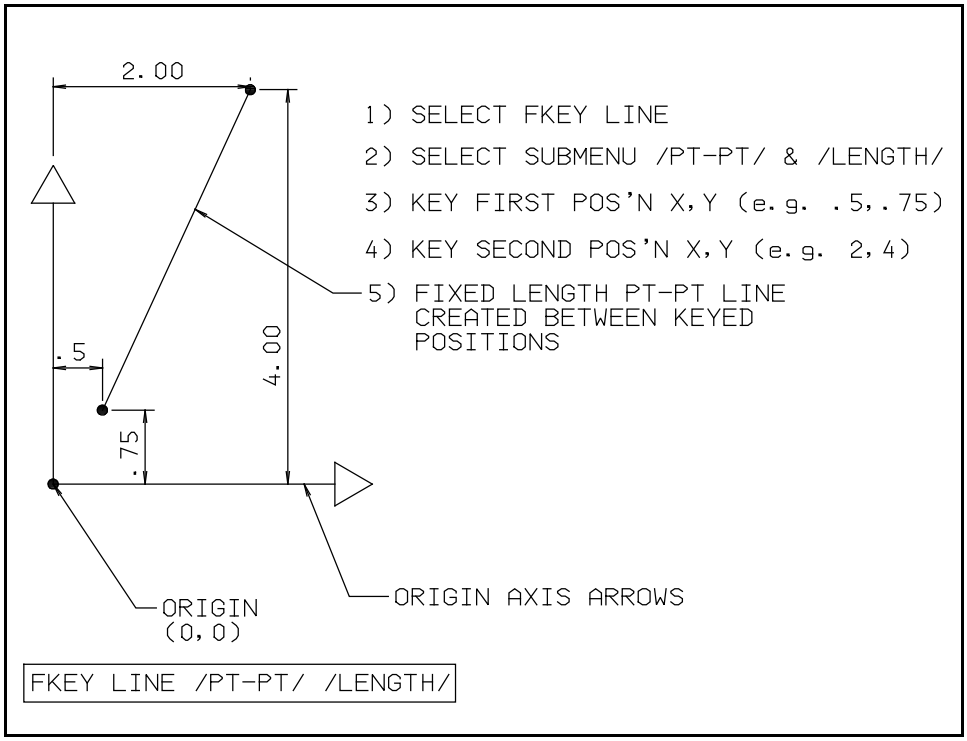

Figure 87 Example for a fixed length pt-pt line drawn between two X,Y positions (NODE PATH A,M,Q,R,V,W)

To create this line follow these steps:

STEP NO.	ACTION / RESULT	MENU PROMPT (BEFORE THE ACTION) (2nd line from top of screen)	NODE NO.
1	SELECT Fkey LINE		A
2	SELECT submenu /PT-PT/ and /LENGTH/ (If they are not already underlined)		A
3	KEY the position of one end of the pt-pt line (e.g. .5,.75)	Key X,Y / Ind point / Sel element / YN chain mode	Q
4	KEY the position of the other end of the pt-pt line (e.g. 2,4)	KEY X,Y / Ind point / Sel element 2	V
5	An fixed length pt-pt line is created between the two keyed positions	KEY X,Y / Ind pt / Sel elem / YN erase-restore	W

1B) A FIXED LENGTH PT-PT LINE DRAWN BETWEEN TWO INDICATED POSITIONS:

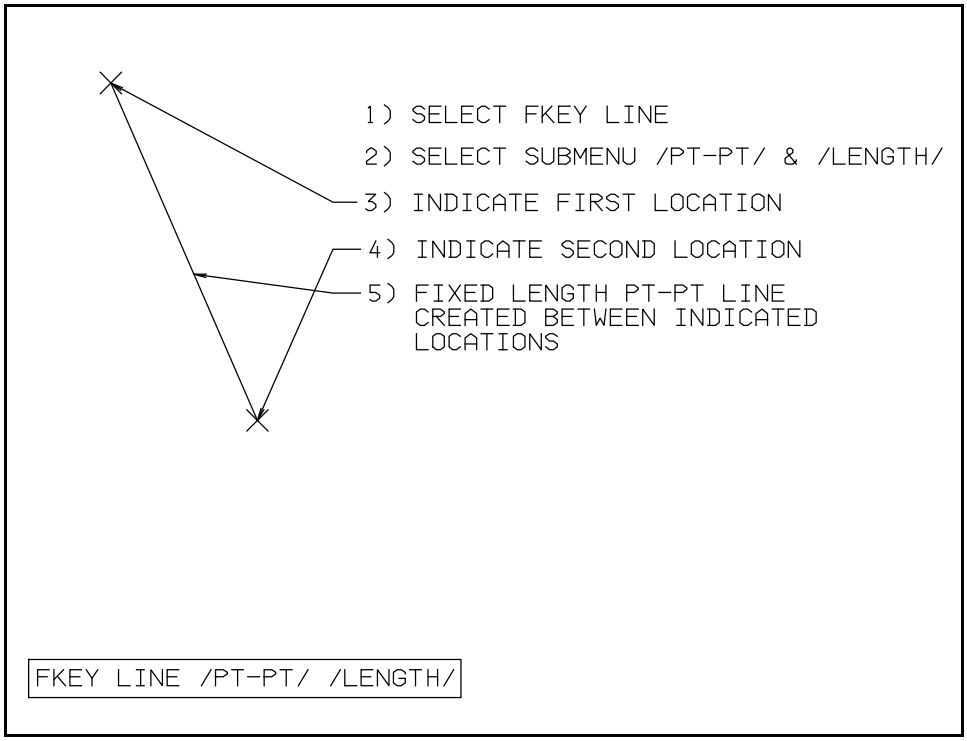

Figure 88 Example for a fixed length pt-pt line drawn between two indicated positions (NODE PATH A,M,Q,R,V,W)

To create this line follow these steps:

STEP NO.	ACTION / RESULT	MENU PROMPT (BEFORE THE ACTION) (2nd line from top of screen)	NODE NO.
1	SELECT Fkey LINE		A
2	SELECT submenu /PT-PT/ and /LENGTH/ (If they are not already underlined)		A
3	INDICATE the position of one end of the line	Key X,Y / Ind point / Sel element / YN chain mode	Q
4	INDICATE the position of the other end of the line	KEY X,Y / Ind point / Sel element 2	V
5	A fixed length pt-pt line is created, starting at the first position and ending at the second position	Key X,Y / Ind pt / Sel elem / YN erase-restore	W

1C) A FIXED LENGTH PT-PT LINE DRAWN BETWEEN TWO POINTS:

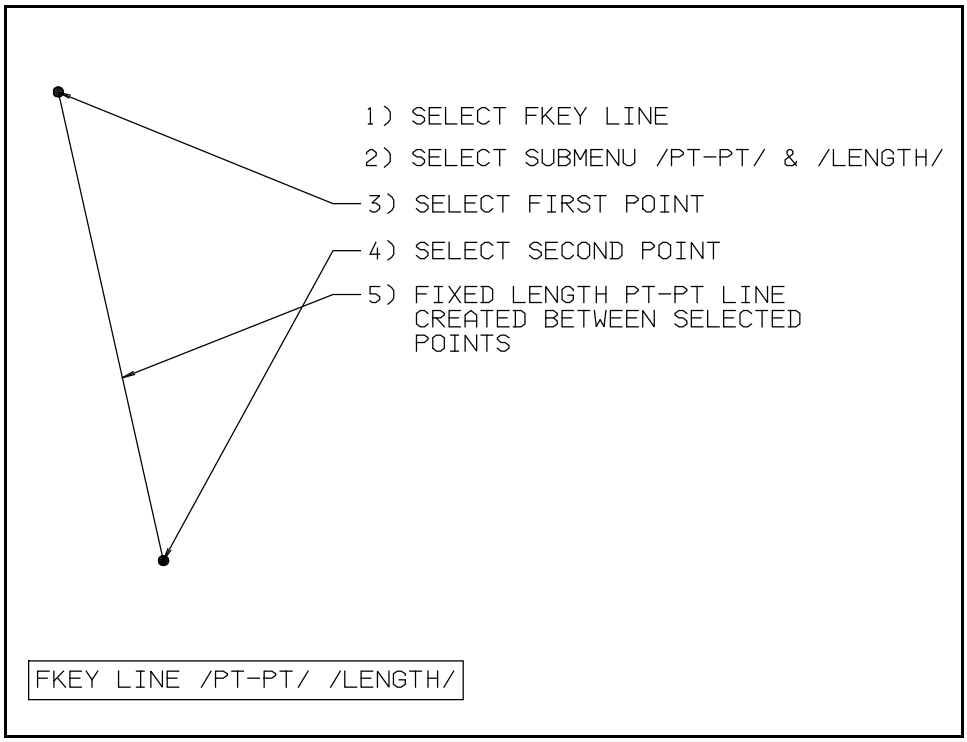

Figure 89 Example for a fixed length pt-pt line drawn between two points (NODE PATH A,M,N,R,S,W)

To create this line follow these steps:

STEP NO.	ACTION / RESULT	MENU PROMPT (BEFORE THE ACTION) (2nd line from top of screen)	NODE NO.
1	SELECT Fkey LINE		A
2	SELECT submenu /PT-PT/ and /LENGTH/ (If they are not already underlined)		A
3	SELECT first point. The line will start at this point.	Key X,Y / Ind point / Sel element / YN chain mode	N
4	SELECT second point. The line will end at this point	Key X,Y / Ind point / Sel element 2	S
5	A fixed length pt-pt line is created between the points	Key X,Y / Ind pt / Sel elem / YN erase-restore	W

1D) A FIXED LENGTH PT-PT LINE DRAWN TANGENT TO TWO CIRCLES:

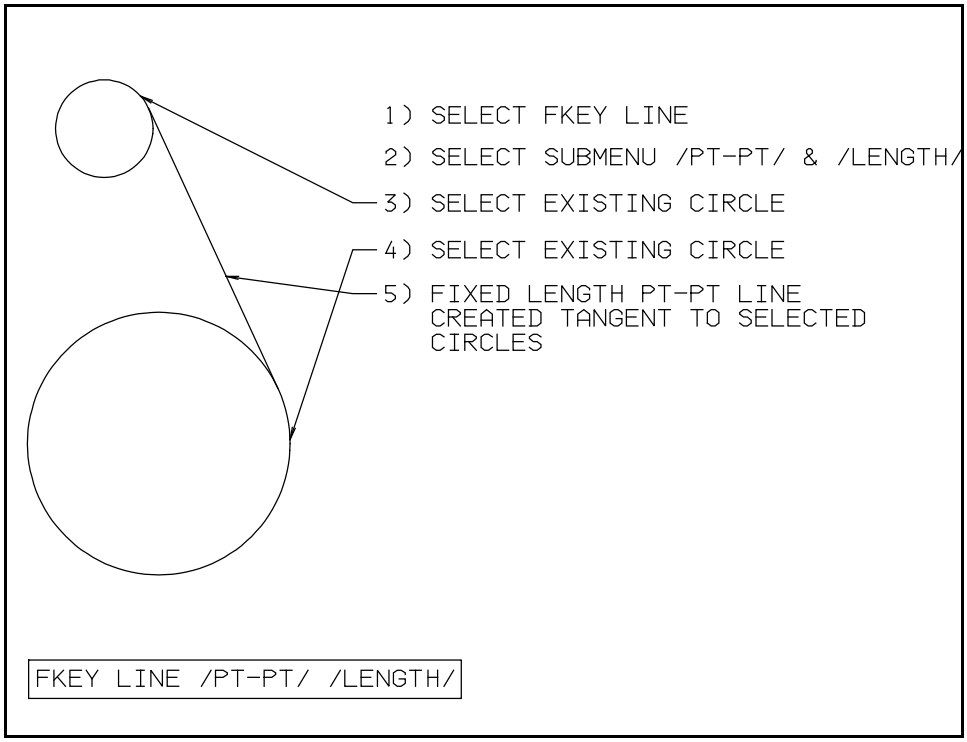

Figure 90 Example for a fixed length pt-pt line drawn tangent to two circles (NODE PATH A,M,N,R,S,W)

To create this line follow these steps:

STEP NO.	ACTION / RESULT	MENU PROMPT (BEFORE THE ACTION) (2nd line from top of screen)	NODE NO.
1	SELECT Fkey LINE		A
2	SELECT submenu /PT-PT/ and /LENGTH/ (If they are not already underlined)		A
3	SELECT existing circle	Key X,Y / Ind point / Sel element / YN chain mode	N
4	SELECT existing circle	Key X,Y / Ind point / Sel element 2	S
5	A fixed length pt-pt line is created, tangent to both circles.	Key X,Y / Ind pt / Sel elem / YN erase-restore	W

1E) A FIXED LENGTH PT-PT LINE DRAWN FROM ONE POINT TANGENT TO A CIRCLE:

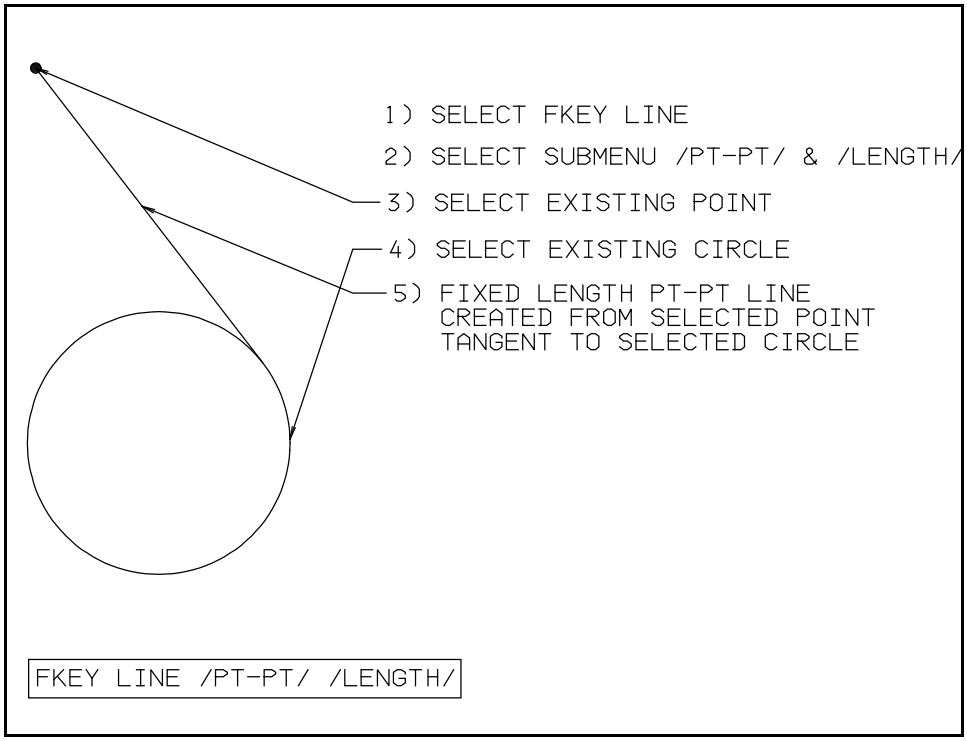

Figure 91 Example for a fixed length pt-pt line drawn from one point tangent to a circle (NODE PATH A,M,Q,R,S,W)

To create this line follow these steps:

STEP NO.	ACTION / RESULT	MENU PROMPT (BEFORE THE ACTION) (2nd line from top of screen)	NODE NO.
1	SELECT Fkey LINE		A
2	SELECT submenu /PT-PT/ and /LENGTH/ (If they are not already underlined)		A
3	SELECT point	Key X,Y / Ind point / Sel element / YN chain mode	N
4	SELECT circle	Key X,Y / Ind point / Sel element 2	S
5	A fixed length pt-pt line is created tangent to the circle from the selected point	Key X,Y / Ind pt / Sel elem / YN erase-restore	W

1F) A CHAIN OF FIXED LENGTH PT-PT LINES CREATED BY CONNECTING A SERIES OF POINTS:

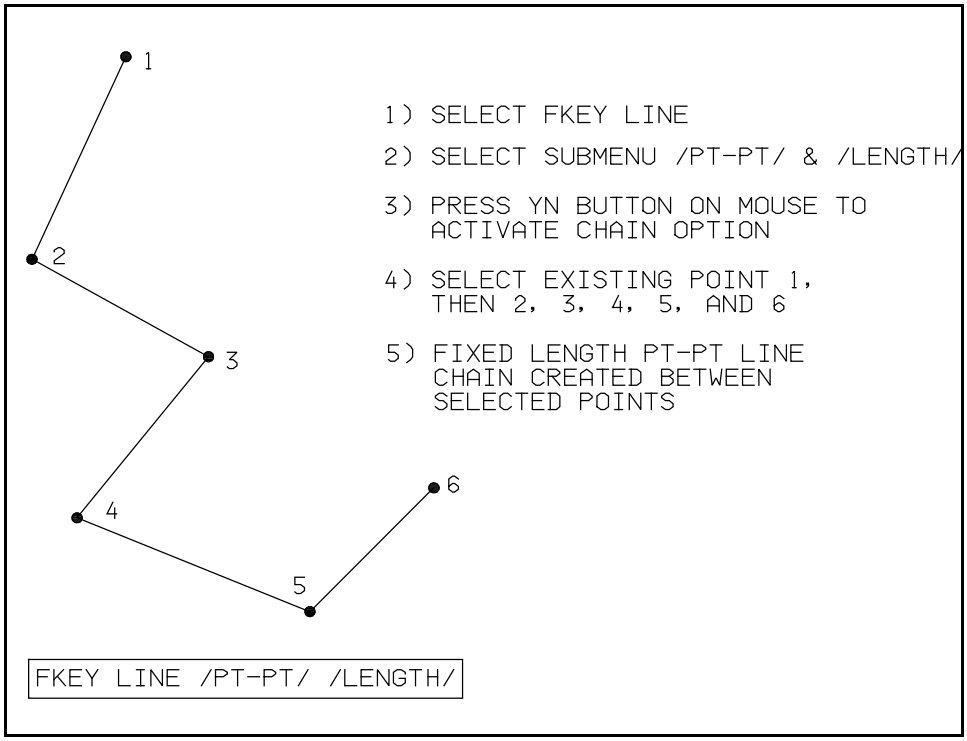

Figure 92 Example for a chain of fixed length pt-pt lines created by connecting a series of points (NODE PATH A,M,N,R,S,W)

To create this line follow these steps:

STEP NO.	ACTION / RESULT	MENU PROMPT (BEFORE THE ACTION) (2nd line from top of screen)	NODE NO.
1	SELECT Fkey LINE		A
2	SELECT submenu /PT-PT/ and /LENGTH/ (If they are not already underlined)		A
3	PRESS Y/N button on mouse to activate chain option	Key X,Y / Ind point / Sel element / YN chain mode	M
4	SELECT point 1 SELECT point 2 SELECT point 3 SELECT point 4 SELECT point 5 SELECT point 6	Key X,Y / Ind point / Sel element 1 Key X,Y / Ind point / Sel element 2 Key X,Y / Ind pt / Sel elem / YN erase-restore Key X,Y / Ind pt / Sel elem / YN erase-restore Key X,Y / Ind pt / Sel elem / YN erase-restore Key X,Y / Ind pt / Sel elem / YN erase-restore	N S N N N N

STEP NO.	ACTION / RESULT	MENU PROMPT (BEFORE THE ACTION) (2nd line from top of screen)	NODE NO.
5	A fixed length pt-pt line chain created between the selected points	Key X,Y / Ind pt / Sel elem / YN erase-restore	W

2A) AN UNLIMITED LENGTH PT-PT LINE DRAWN THROUGH TWO POINTS:

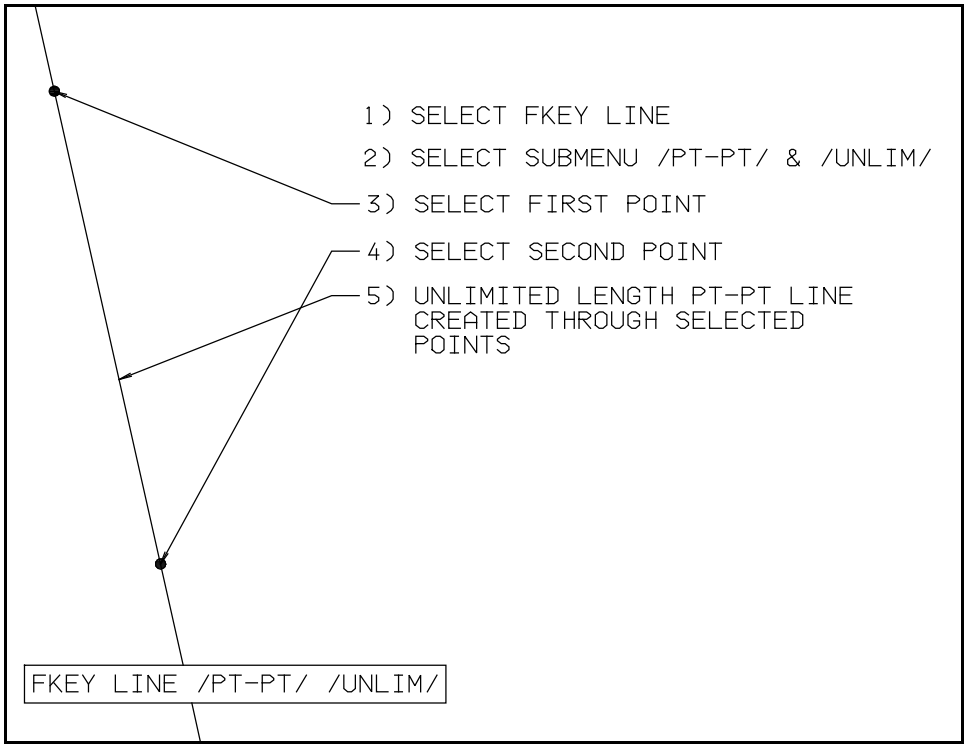

Figure 93 Example for an unlimited length pt-pt line drawn between two points (NODE PATH A,B,C,G,H,L)

To create this line follow these steps:

STEP NO.	ACTION / RESULT	MENU PROMPT (BEFORE THE ACTION) (2nd line from top of screen)	NODE NO.
1	SELECT Fkey LINE		A
2	SELECT submenu /PT-PT/ and /UNLIM/ (If they are not already underlined)		A
3	SELECT first point.	Key X,Y / Ind point / Sel element / YN chain mode	C
4	SELECT second point	Key X,Y / Ind point / Sel element 2	H
5	An unlimited length pt-pt line is drawn through the selected points	Key X,Y / Ind pt / Sel elem / YN erase-restore	L

2B) AN UNLIMITED LENGTH PT-PT LINE DRAWN TANGENT TO TWO CIRCLES:

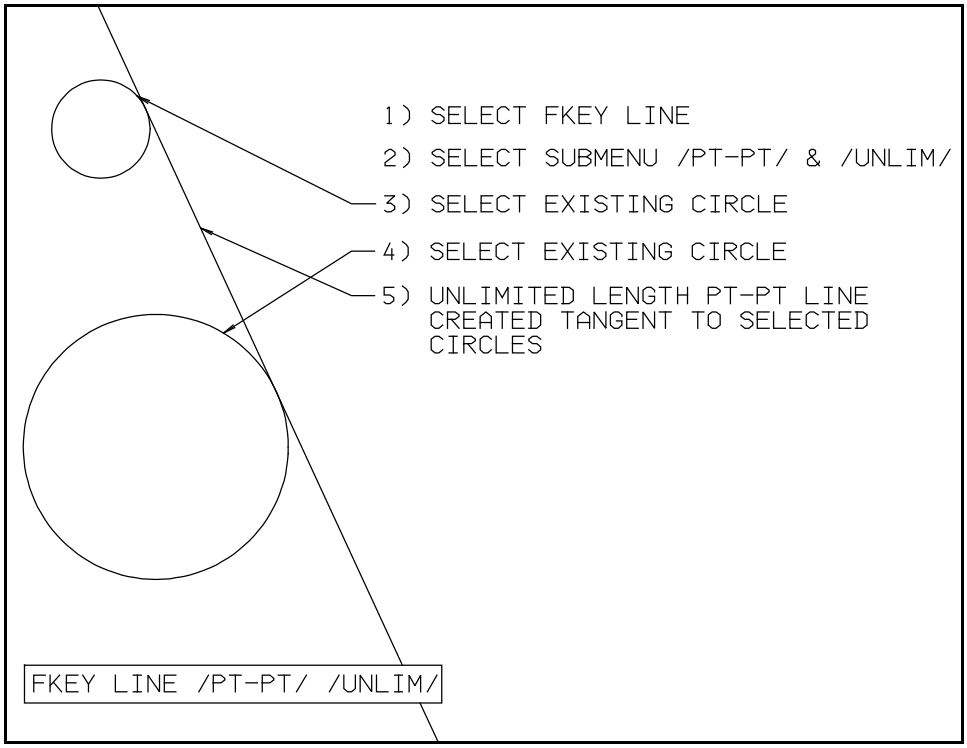

Figure 94 Example for an unlimited length pt-pt line drawn tangent to two circles (NODE PATH A,B,C,G,H,L)

To create this line follow these steps:

STEP NO.	ACTION / RESULT	MENU PROMPT (BEFORE THE ACTION) (2nd line from top of screen)	NODE NO.
1	SELECT Fkey LINE		A
2	SELECT submenu /PT-PT/ and /UNLIM/ (If they are not already underlined)		A
3	SELECT first existing circle.	Key X,Y / Ind point / Sel element / YN chain mode	C
4	SELECT second existing circle	KEY X,Y / Ind point / Sel element 2	H
5	An unlimited length pt-pt line is created tangent to each circle	Key X,Y / Ind pt / Sel elem / YN erase-restore	L

FKey LINE

SUBMENU / PT-PT /

ADVANCED

SECTION

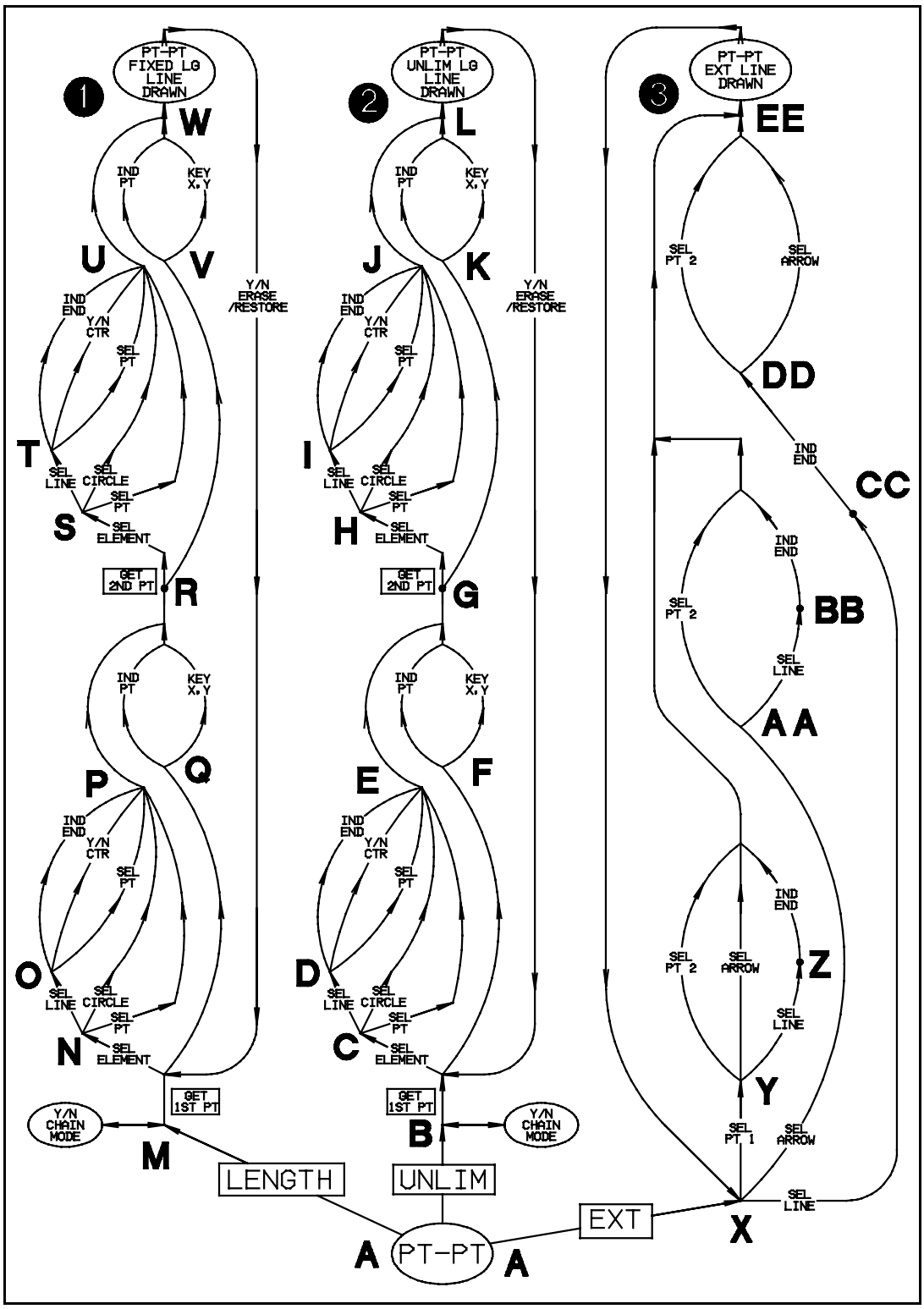

Figure 95 Advanced Road Map for Pt-pt Line

1G) A FIXED LENGTH PT-PT LINE DRAWN FROM THE MIDDLE OF ONE LINE TO THE END OF ANOTHER LINE:

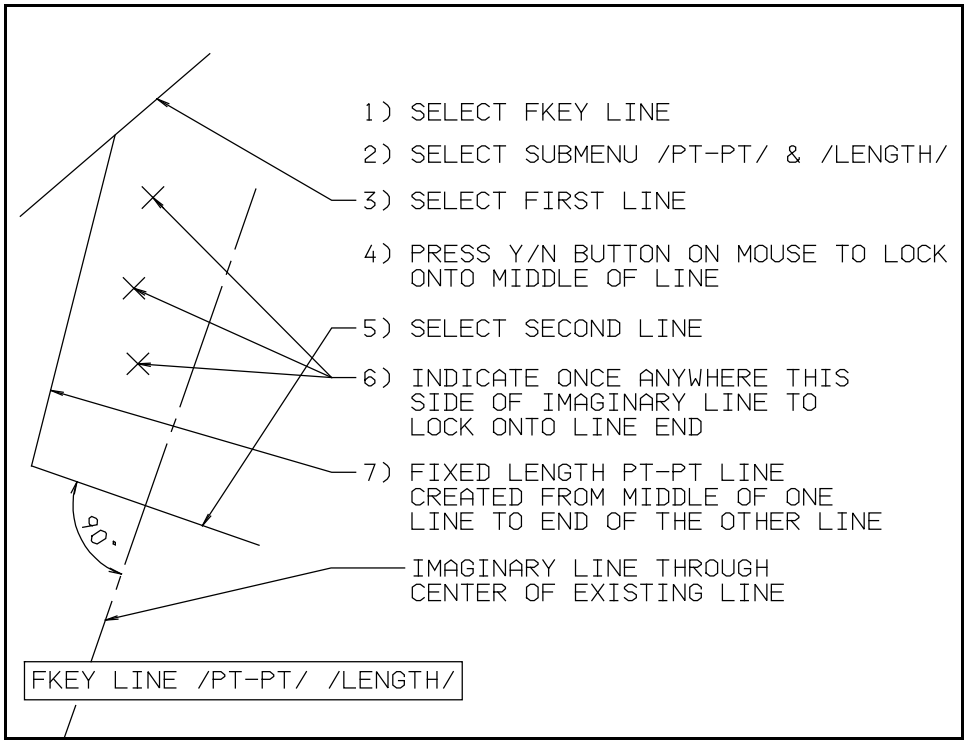

Figure 96 Example for a fixed length pt-pt line drawn from the middle of one line to the end of another line (NODE PATH A,M,N,O,P,R,S,T,U,W)

To create this line follow these steps:

STEP NO.	ACTION / RESULT	MENU PROMPT (BEFORE THE ACTION) (2nd line from top of screen)	NODE NO.
1	SELECT Fkey LINE		A
2	SELECT submenu /PT-PT/ and /LENGTH/ (If they are not already underlined)		A
3	SELECT first line	Key X,Y / Ind point / Sel element / YN chain mode	N
4	Press Y/N button on mouse to lock onto middle of line	Ind end / YN center / Sel point	O
5	SELECT second line	KEY X,Y / IND point / Sel element 2	S
6	INDICATE once anywhere one side of imaginary line to lock onto line end	Ind end / YN center / Sel point	T

STEP NO.	ACTION / RESULT	MENU PROMPT (BEFORE THE ACTION) (2nd line from top of screen)	NODE NO.
7	A fixed length pt-pt line is drawn from the middle of one line to the end of the other line	Key X,Y / Ind pt / Sel elem / YN erase-restore	W

2C) AN UNLIMITED LENGTH PT-PT LINE DRAWN BETWEEN THE MIDDLE OF TWO LINES:

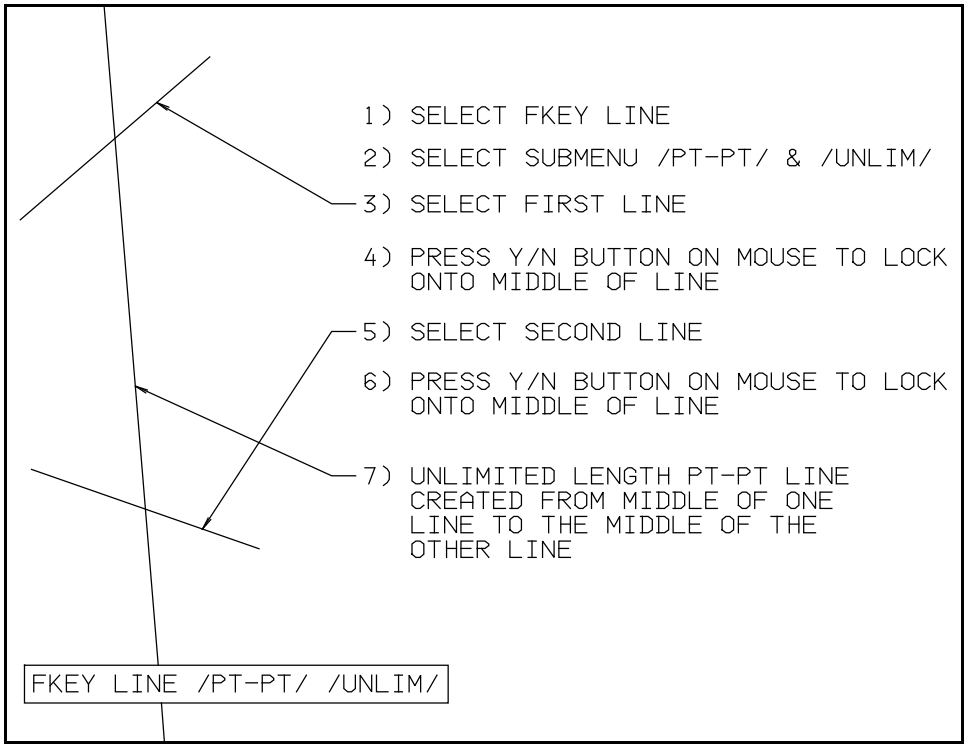

Figure 97 Example for an unlimited length pt-pt line drawn between the middle of two lines (NODE PATH A,B,C,D,E,G,H,I,J,L)

To create this line follow these steps:

STEP NO.	ACTION / RESULT	MENU PROMPT (BEFORE THE ACTION) (2nd line from top of screen)	NODE NO.
1	SELECT Fkey LINE		A
2	SELECT submenu /PT-PT/ and /UNLIM/ (If they are not already underlined)		A
3	SELECT first line	Key X,Y / Ind point / Sel element / YN chain mode	C
4	Press YN button on mouse to lock onto the middle of the selected line	Ind end / YN center / Sel point	D
5	SELECT second line	Key X,Y / Ind point / Sel element 2	H
6	Press YN button on mouse to lock onto the middle of the selected line	Ind end / YN center / Sel point	I

STEP NO.	ACTION / RESULT	MENU PROMPT (BEFORE THE ACTION) (2nd line from top of screen)	NODE NO.
7	An unlimited length pt-pt line is drawn through the middle of one line and through the middle of the other line	Key X,Y / Ind pt / Sel elem / YN erase-restore	L

3) A FIXED LENGTH PT-PT EXTENSION LINE DRAWN BETWEEN TWO POINTS:

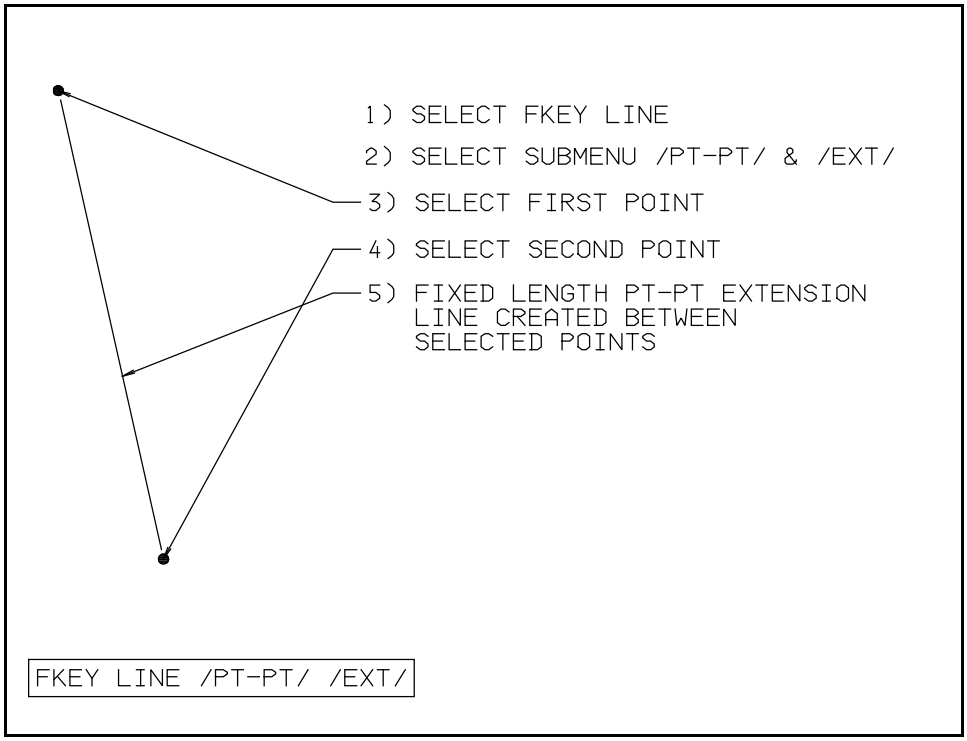

Figure 98 Example for a fixed length pt-pt extension line drawn through two points (NODE PATH A,X,Y,EE)

To create this line follow these steps:

STEP NO.	ACTION / RESULT	MENU PROMPT (BEFORE THE ACTION) (2nd line from top of screen)	NODE NO.
1	SELECT Fkey LINE		A
2	SELECT submenu /PT-PT/ and /LENGTH/ (If they are not already underlined)		A
3	SELECT first point	Sel point, arrow or line	X
4	SELECT second point	Sel point 2, arrow or line	Y
5	A fixed length pt-pt extension line is drawn between the selected points	Sel pnt, arw or ln / Ind end / YN erase-restore	EE

All menus in Micro CADAM are intelligent. They anticipate your actions wherever possible. The results depend on the sequence that the **SELECT, INDICATE, KEY** and **Y/N** keys are pressed. This is summarized for FKey LINE / PT-PT / and shown in chart form below:

FKEY LINE /PT-PT/ ACTION SUMMARY

LINE NO.	TO CREATE	1ST ACTION	2ND ACTION	3RD ACTION	4TH ACTION	5TH ACTION	NODEPATH
BEGINNER SECTION							
1A	A fixed length pt-pt line drawn between two X,Y positions	KEY X,Y	KEY X,Y				A,M,Q,R,V,W
1B	A fixed length pt-pt line drawn between two indicated positions	IND position	IND position				A,M,Q,R,V,W
1C	A fixed length pt-pt line drawn between two points	SEL Pt	SEL Pt				A,M,N,P,R,S, U,W
1D	A fixed length pt-pt line drawn tangent to two circles	SEL Circle	SEL Circle				A,M,N,P,R,S, U,W
1E	A fixed length pt-pt line drawn from one point tangent to a circle	SEL Pt	SEL Circle				A,M,N,P,R,S, U,W
1F	A chain of fixed length pt-pt lines created by connecting a series of pts	YN Chain mode	SEL Pt	Sel Pt	Sel Pt	Sel Pt...etc	A,M,N,P,R,S, U,W
2A	An unlimited length pt-pt line drawn through two points	SEL Pt	SEL Pt				A,B,C,E,G,H, J,L
2B	An unlimited length pt-pt line drawn tangent to two circles	SEL Circle	SEL Circle				A,B,C,E,G,H, J,L
ADVANCED SECTION							
1G	A fixed length pt-pt line drawn from the middle of one line to the end of another line	SEL Line	Y/N Center	SEL Line	IND end		A,M,N,O,P,R, S,T,U,W
2C	An unlimited length pt-pt line drawn between the middle of two lines	SEL Line	Y/N Center	SEL Line	Y/N Center		A,B,C,D,E,G, H,I,J,L
3	A fixed length pt-pt extension line drawn between two points	SEL Pt	SEL Pt				A,X,Y,EE

FKey LINE

SUBMENU / MLT /

Fkey LINE submenu /MLT/ allows you to draw multilines. A multiline is a special type of line and has special properties as follow:

- A multiline has multiple line segments chained together.
- These chained segments act like a single entity.
- Each segment of a multiline can be 'pushed' a number of grid points in a direction normal to itself by using the /PUSH/ submenu option.
- A multiline can be converted into regular lines, and regular lines can be converted into a multiline by using the /CNVT/ submenu option.
- A multiline can be constructed in /AUTO/ mode, in which case it references an existing grid, or it can be created in /NO AUTO/ mode in which case the multilines can be constructed anywhere. Multilines in /AUTO/ mode can run horizontal, vertical or at 45 degrees.
- Two or more adjacent multilines can be joined together by using the / JOIN / submenu option.
- A multiline may be added to by using the /MOD/ submenu option.
- A currently displayed multiline may be highlighted by using the / SHOW / submenu option. To restore the display select the submenu option / RESET /.

Multilines are particularly useful for constructing the following:

- Pneumatic schematic drawings
- Hydraulic schematic drawings
- Electrical schematic drawings
- Charts and graphs
- As an assist in constructing mechanical, architectural drawings

Multilines are usually first used to create the structure desired. They can then be converted into normal lines. The normal lines can then be broken around any symbols and dittos placed on these lines. An example of a multiline is shown below:

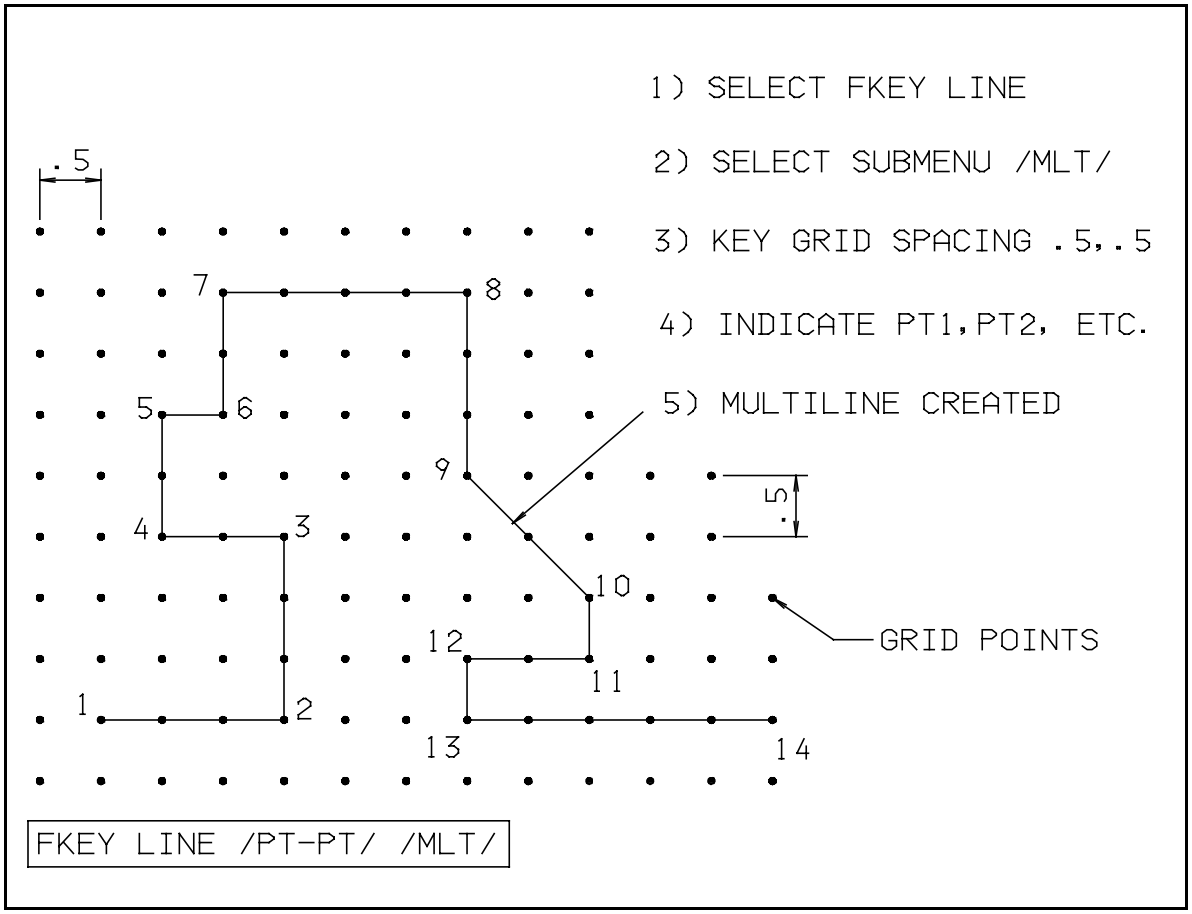

Figure 99 Example of a multiline construction

CHAPTER 13

FKey CIRCLE

/ CIRCLE / ELLIPSE /

Figure 1 - Menu Item Tree for FKey CIRCLE

In Micro CADAM circles begin at 0 degrees and run positive in the counter clockwise direction. Another way of looking at this is that in Micro CADAM a circle is a straight line that is curved and with its' starting and ending points being the same point. See Figure 2 below.

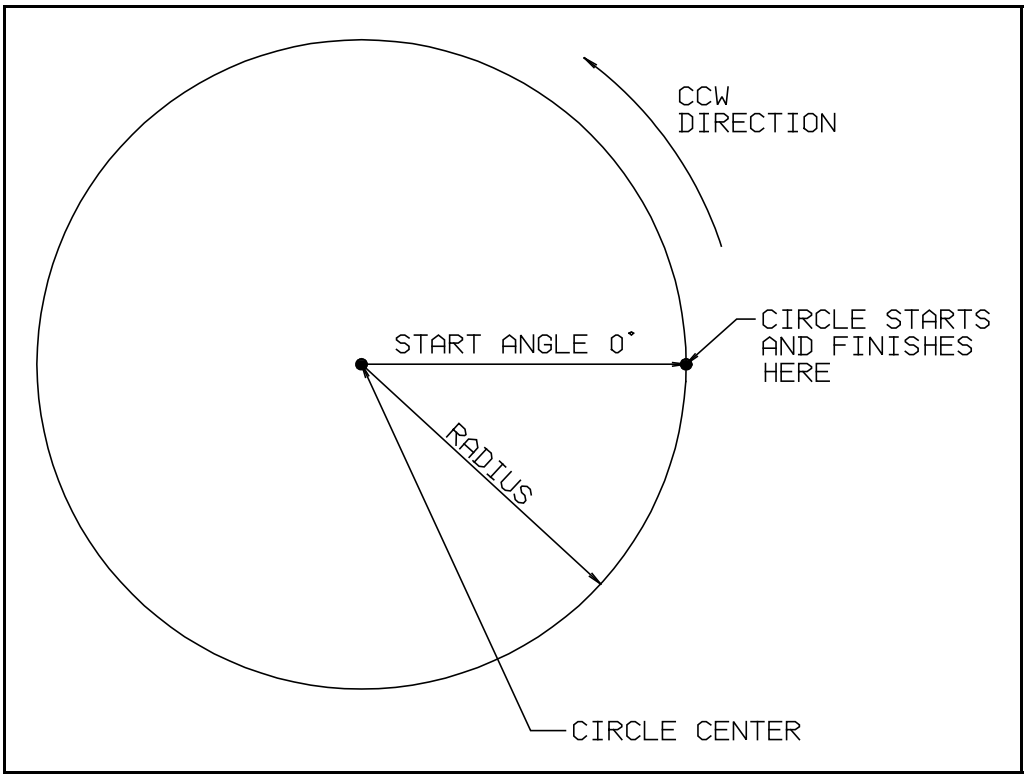

Figure 2 The Micro CADAM Circle

MENU ITEM TREE DESCRIPTION:

- /CIRCLE/ Creates Circles
- /ELLIPSE/ Creates Ellipses

FKey CIRCLE

SUBMENU / CIRCLE /

Fkey CIRCLE SubMenu /CIRCLE/ allows you to draw circles. Each circle has been assigned a circle number. The same circle number is also referenced on the Circle Road Map and the Action Summary. The different ways to draw circles are divided into beginner and advanced sections and are listed with page numbers as follows:

BEGINNER: (See Figure 3 on Page 13-6 for the Beginner Road Map for Circle)

CIRCLE NO.	DESCRIPTION	PAGE NO.
1	Circle centered at co-ordinate X,Y with keyed radius R	13-7
2	Circle centered on point at keyed radius	13-8
3	Circle through 3 points (3 points on circumference)	13-9
4	Circle 1st point center and 2nd point on circumference	13-10
5	Circle tangent to 3 lines	13-11
6	Circle change existing radius	13-12

ADVANCED: (See Figure 10 on Page 13-14 for the Advanced Road Map for Circle)

CIRCLE NO.	DESCRIPTION	PAGE NO.
7	Circle through 2 points (2 points on circumference) with keyed radius	13-15
8	Circle centered on pt and tangent to line	13-16
9	Circle at center of existing circle and tangent to line	13-17
10	Circle ref center of existing circle and tangent to line at keyed radius	13-18
11	Circle tangent to 2 lines at keyed radius	13-19
12	Circle drawn through pt, tangent to line at keyed radius	13-20

FKey CIRCLE

SUBMENU /CIRCLE/

BEGINNER

SECTION

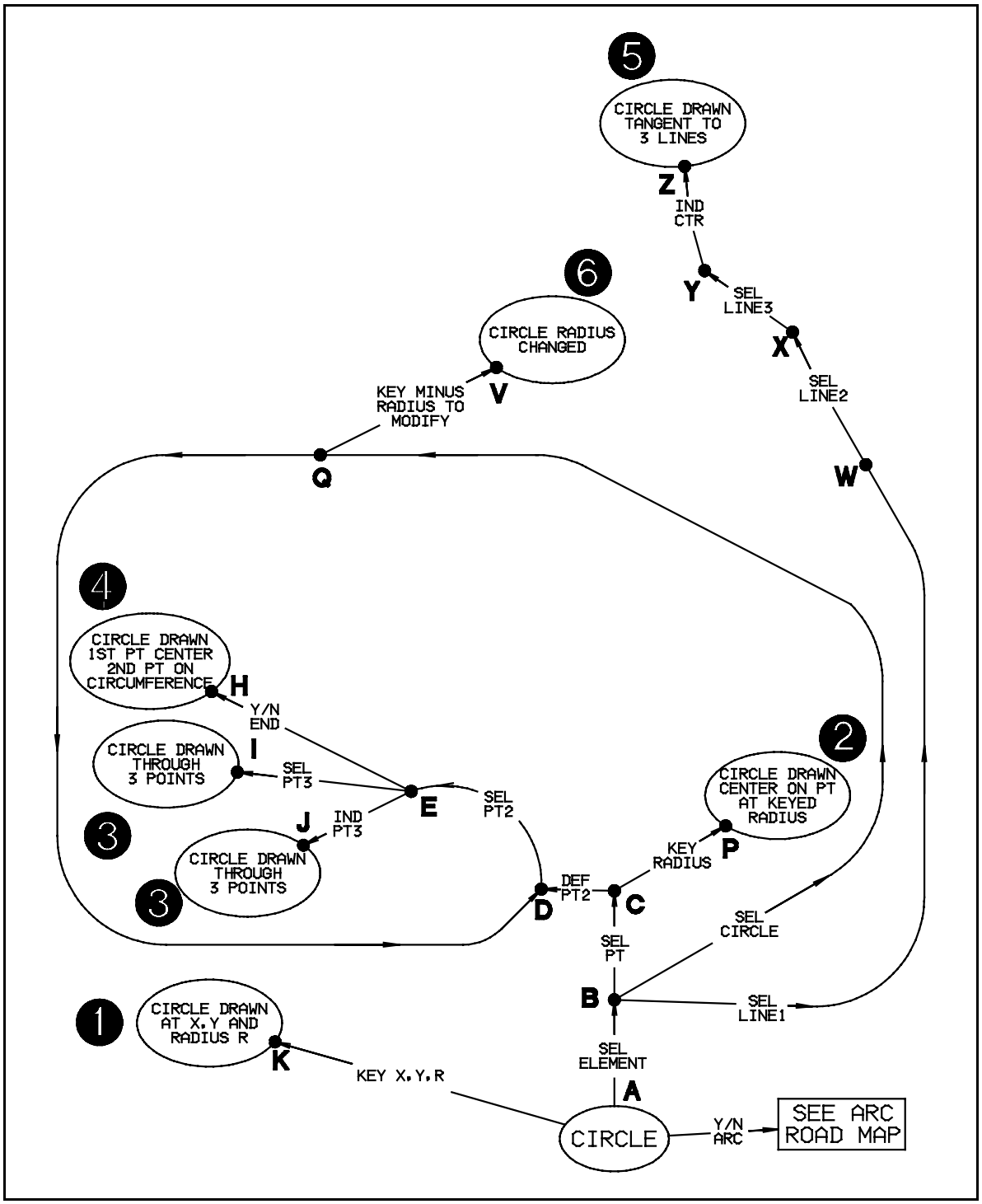

Figure 3 Beginner Road Map for Circle

1) CIRCLE DRAWN AT CO-ORDINATES X,Y WITH RADIUS R:

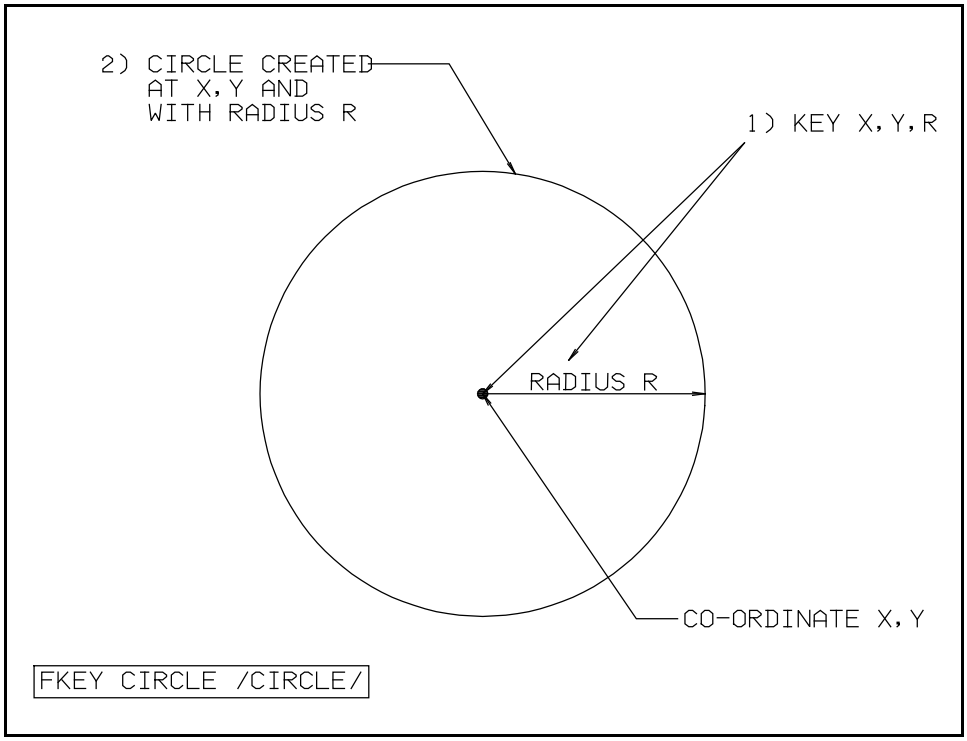

Figure 4 Example for a circle drawn at X,Y with Radius R (NODE PATH A,K)

To create this circle SELECT FKey CIRCLE and submenu /CIRCLE/ and follow these steps:

1. Key X,Y,R, (e.g. 2.5,3.625,1.5) where X and Y are the co-ordinates of the center of the circle (i.e. 2.5, 3.625) and R is the radius of the circle (i.e. 1.5). Make sure you press the ENTER key on the keyboard after typing in the numbers.

2. Circle is created centered at co-ordinate X,Y and with radius R.

2) CIRCLE CENTERED ON POINT AT KEYED RADIUS:

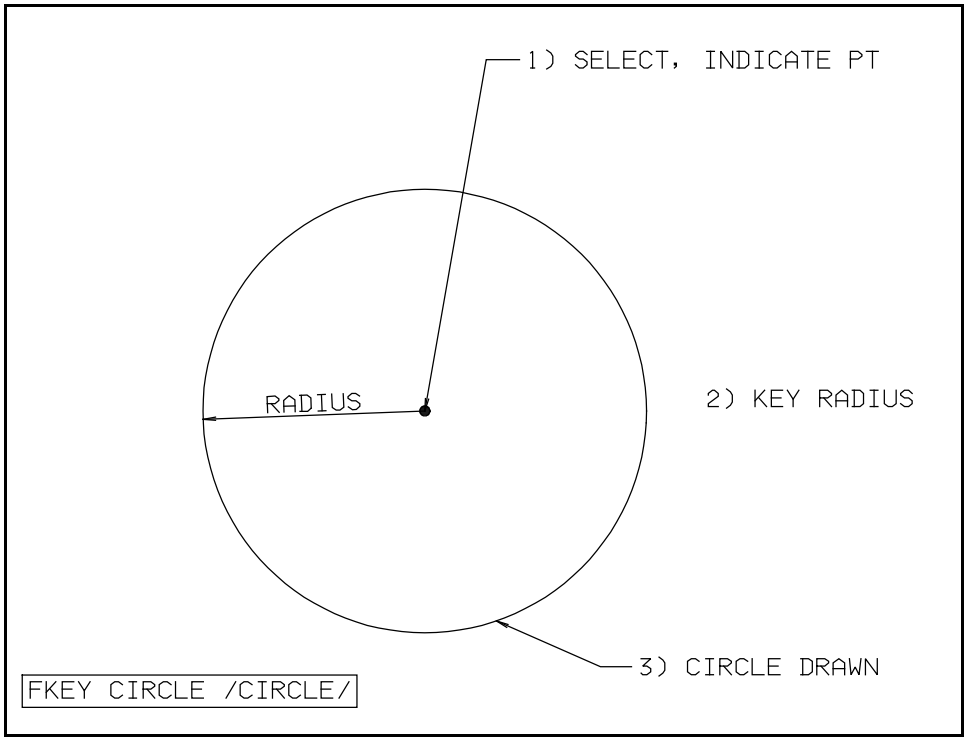

Figure 5 Example of Circle with center on a point and with keyed radius (NODE PATH A,B,C,P)

To create this circle SELECT FKey CIRCLE and submenu /CIRCLE/ and follow these steps:

1. SELECT an existing point on the screen. This will become the center of the circle.

2. KEY in a radius (e.g. 1.50). This will become the radius of the circle.

3. The Circle is drawn centered on the point at the keyed radius.

3) CIRCLE DRAWN THROUGH THREE EXISTING POINTS:

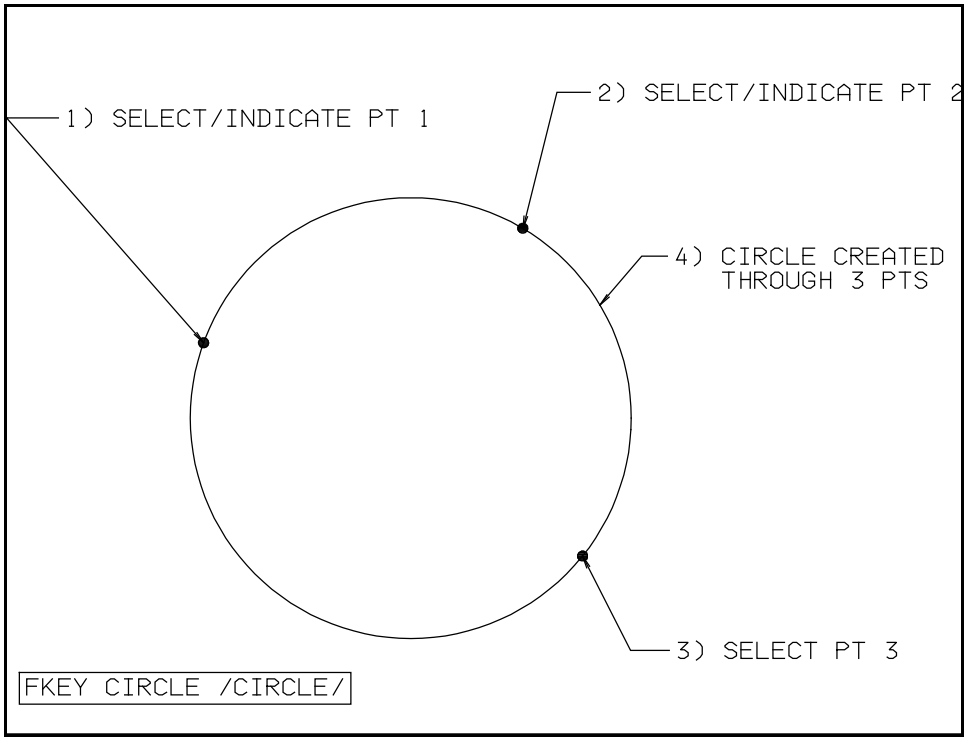

Figure 6 Example of Circle drawn through 3 selected points (NODE PATH A,B,C,D,E,J)

To create this circle SELECT FKey CIRCLE and submenu /CIRCLE/ and follow these steps:

1. Select the first existing point on the screen. This point will be on the circumference of the circle.

2. Select the second existing point on the screen. This point will be on the circumference of the circle.

3. Select the third existing point on the screen. This point will be on the circumference of the circle.

4. A circle is now created with its circumference drawn through the three SELECTED points.

Note that any or all of these points could have been INDICATED points instead of SELECTED points. Remember that indicated points are approximate, while selected points are accurate.

4) CIRCLE DRAWN WITH 1ST POINT BEING THE CENTER POINT AND THE 2ND POINT BEING ON THE CIRCUMFERENCE:

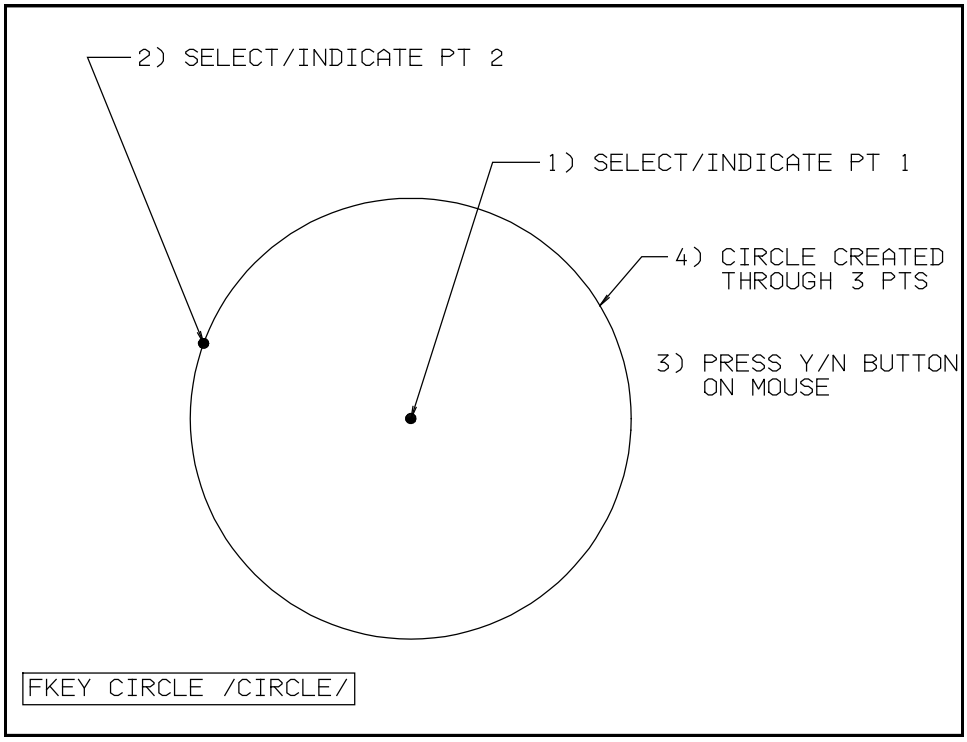

Figure 7 Example of Circle with the 1st pt at the center and the 2nd point on the circumference. (NODE PATH A,B,C,D,E,H)

To create this circle SELECT FKey CIRCLE and submenu /CIRCLE/ and follow these steps:

1. SELECT an existing point on the screen. This point will become the circle center.

2. SELECT another existing point on the screen. This point will be on the circumference of the circle.

3. Press the Y/N button on the mouse. This tells the system that we are finished creating this circle.

4. A circle is now created.

5) CIRCLE DRAWN TANGENT TO 3 LINES:

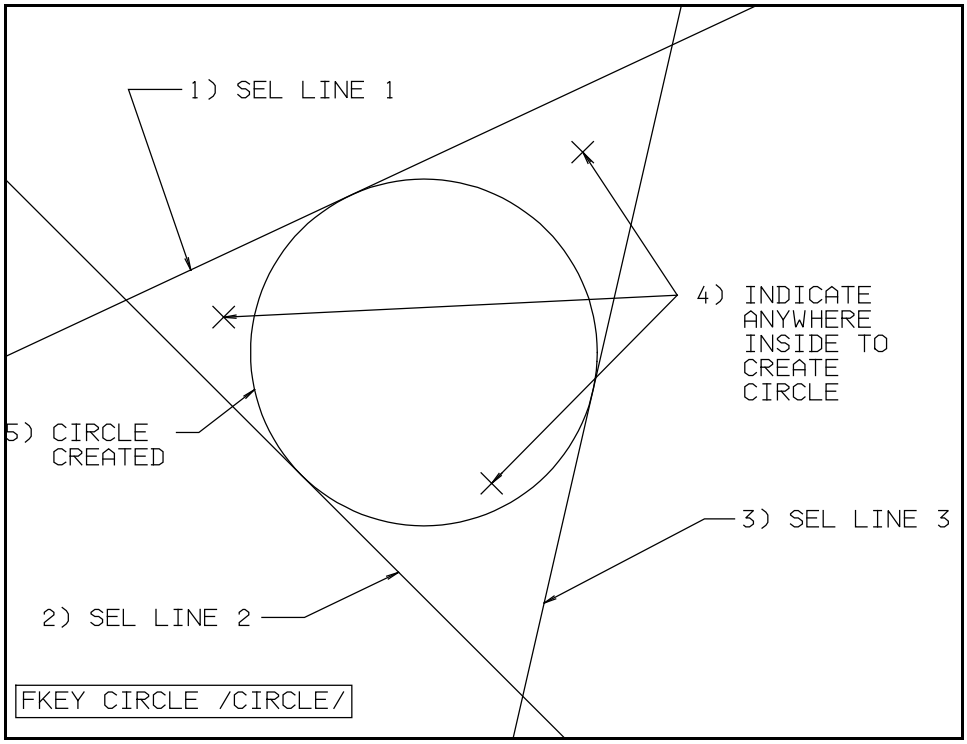

Figure 8 Example of Circle Drawn tangent to 3 lines (NODE PATH A,B,W,X,Y,Z)

To create this circle SELECT FKey CIRCLE and submenu /CIRCLE/ and follow these steps:

1. SELECT an existing line on the screen. The circle will be tangent to this line.

2. SELECT another existing line on the screen. The circle will also be tangent to this line.

3. SELECT another existing line on the screen. The circle will also be tangent to this line.

4. INDICATE anywhere inside the triangle created by the 3 lines.

5. A Circle is created tangent to the 3 selected lines.

Note that there are two possible circles that can be drawn. If you indicate inside the triangle created by the 3 selected lines, a circle will be created as shown in Figure 8. If you indicate outside the triangle, a different circle will be created. Try it!

6) CIRCLE RADIUS CHANGED:

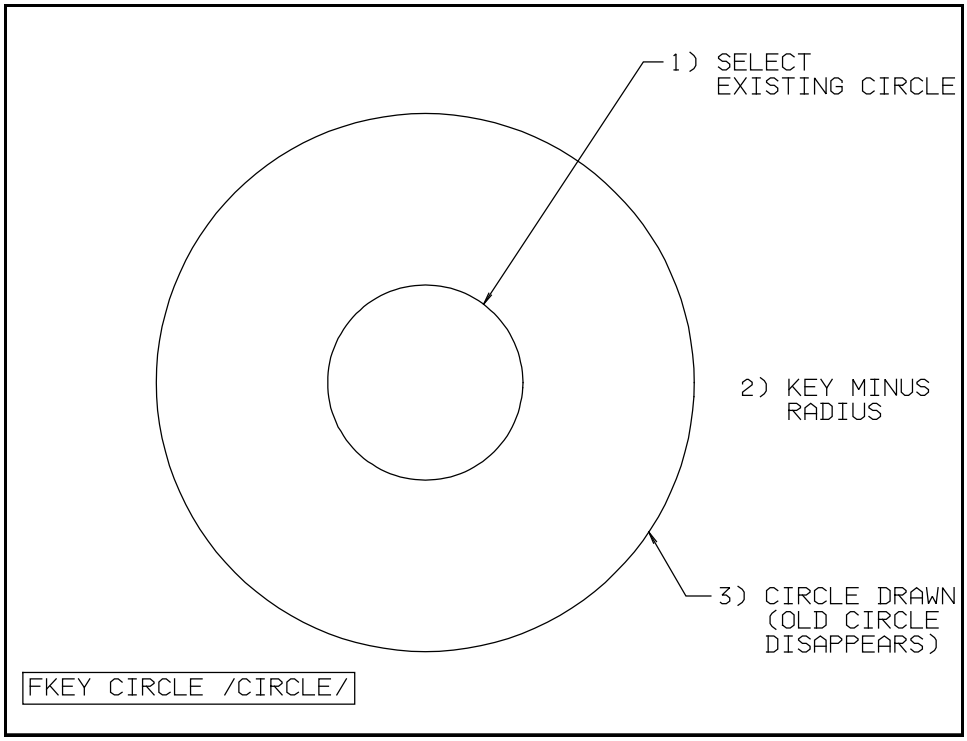

Figure 9 Example of Circle Radius being changed (NODE PATH A,B,Q,V)

To modify this circle SELECT FKey CIRCLE and submenu /CIRCLE/ and follow these steps:

1. SELECT an existing circle on the screen.

2. KEY in a minus radius (e.g. -1.75). Since it is impossible to have a minus radius, the minus sign is a flag to the program that tells it to change the circle radius.

3. The Circle is redrawn to the new radius (and the old circle disappears).

FKey CIRCLE

SUBMENU /CIRCLE/

ADVANCED

SECTION

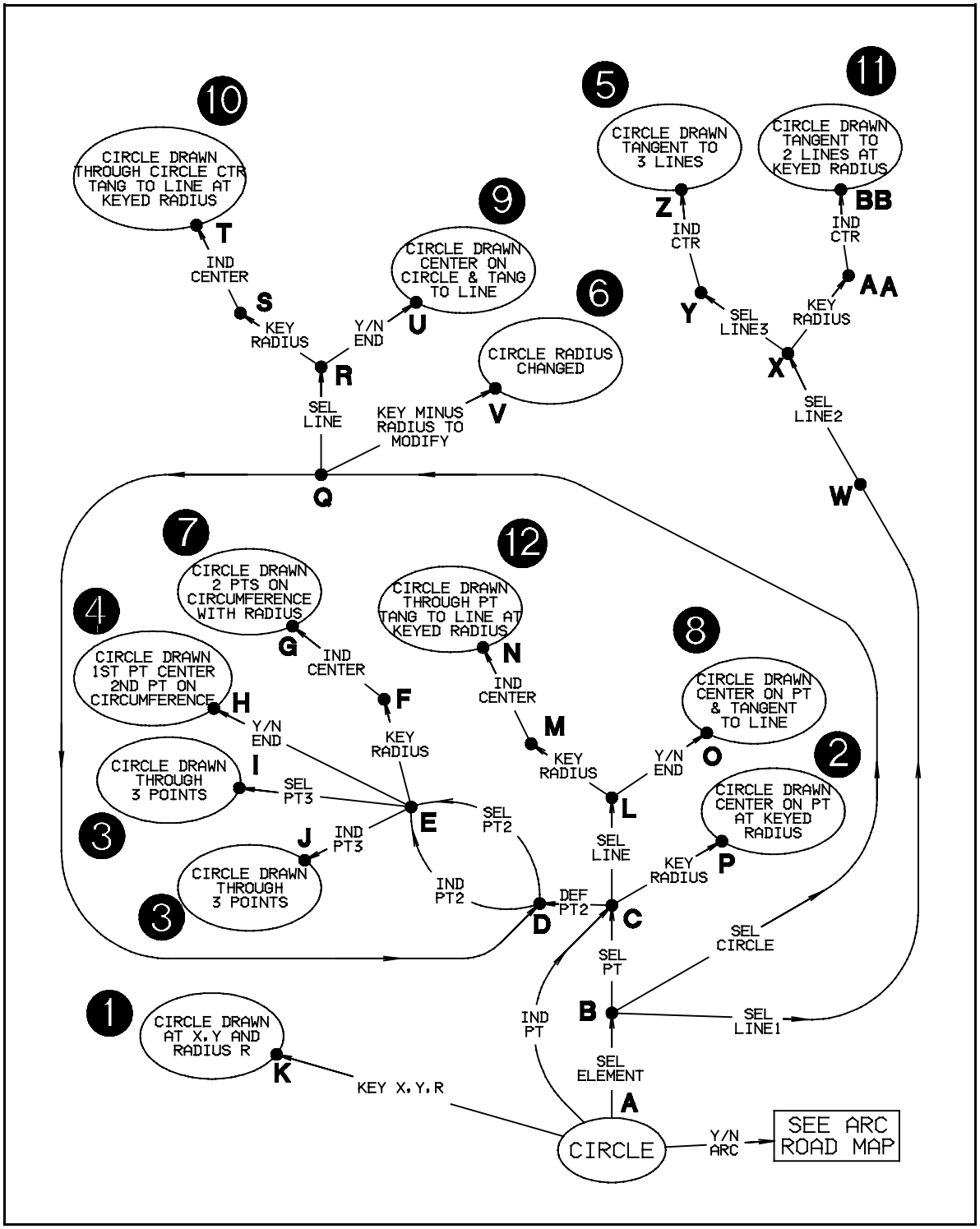

Figure 10 Advanced Road Map for Circle

7) CIRCLE DRAWN THROUGH 2 POINTS ON THE CIRCUMFERENCE WITH KEYED RADIUS:

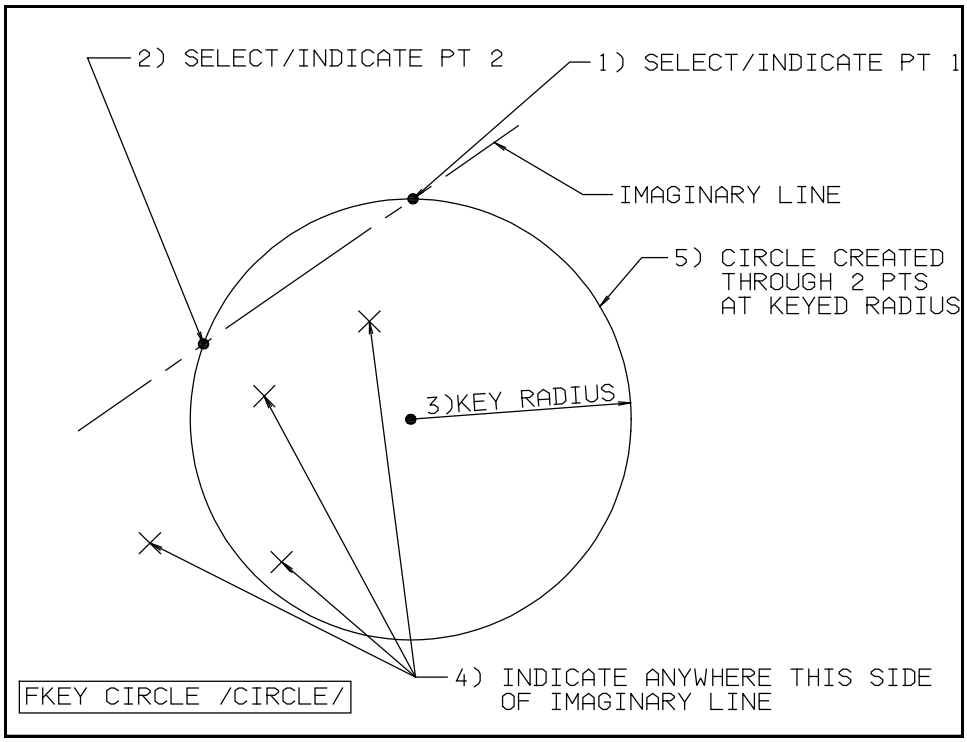

Figure 11 Example of Circle drawn through 2 pts on the circumference with keyed radius (NODEPATH A,B,C,D,E,F,G)

To create this circle SELECT FKey CIRCLE and submenu /CIRCLE/ and follow these steps:

1. SELECT an existing point on the screen. This point will be on the circumference of the circle.

2. SELECT another existing point on the screen. This point will also be on the circumference of the circle.

3. KEY the radius of the circle. Enter the desired radius and press the ENTER key on the keyboard.

4. INDICATE which side of the imaginary line you want the circle to be drawn (See Figure Figure 11)

5. A circle is drawn through 2 points on the circumference with a keyed radius.

8) CIRCLE CENTERED ON POINT AND TANGENT TO LINE:

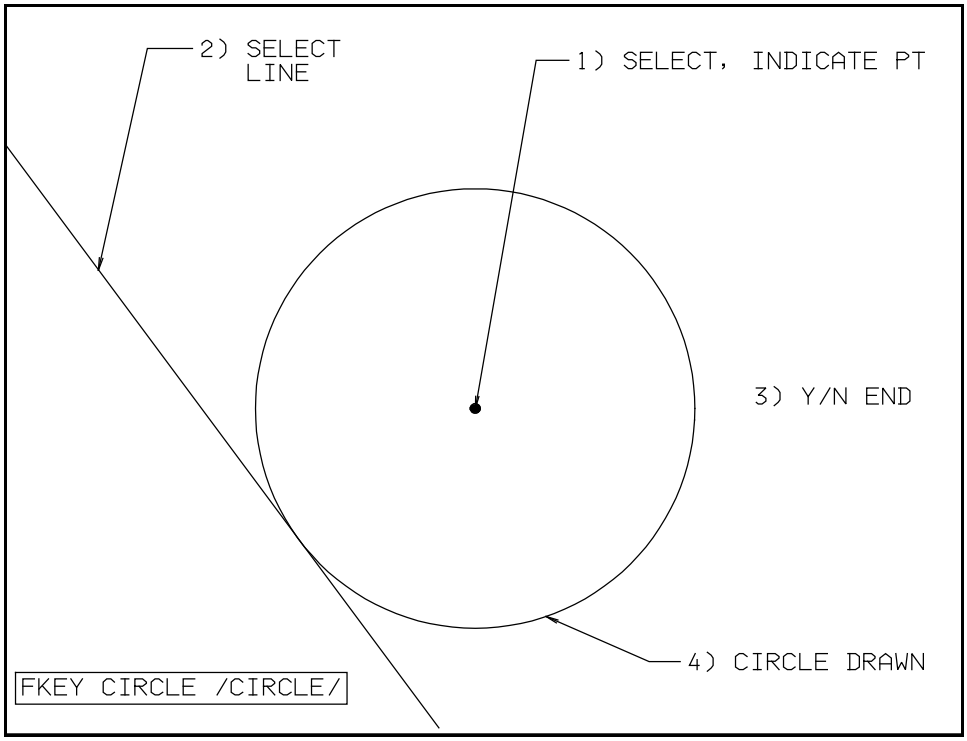

Figure 12 Example of Circle drawn with center at a point and tangent to a line.
(NODE PATH A,B,C,L,O)

To create this circle SELECT FKey CIRCLE and submenu /CIRCLE/ and follow these steps:

1. SELECT an existing point on the screen. This will become the center of the circle.

2. SELECT an existing line on the screen. This circle will be drawn tangent to this line.

3. Press the Y/N button on the mouse.

4. The Circle is drawn centered on the point and tangent to the line.

9) CIRCLE CENTERED ON EXISTING CIRCLE AND TANGENT TO LINE:

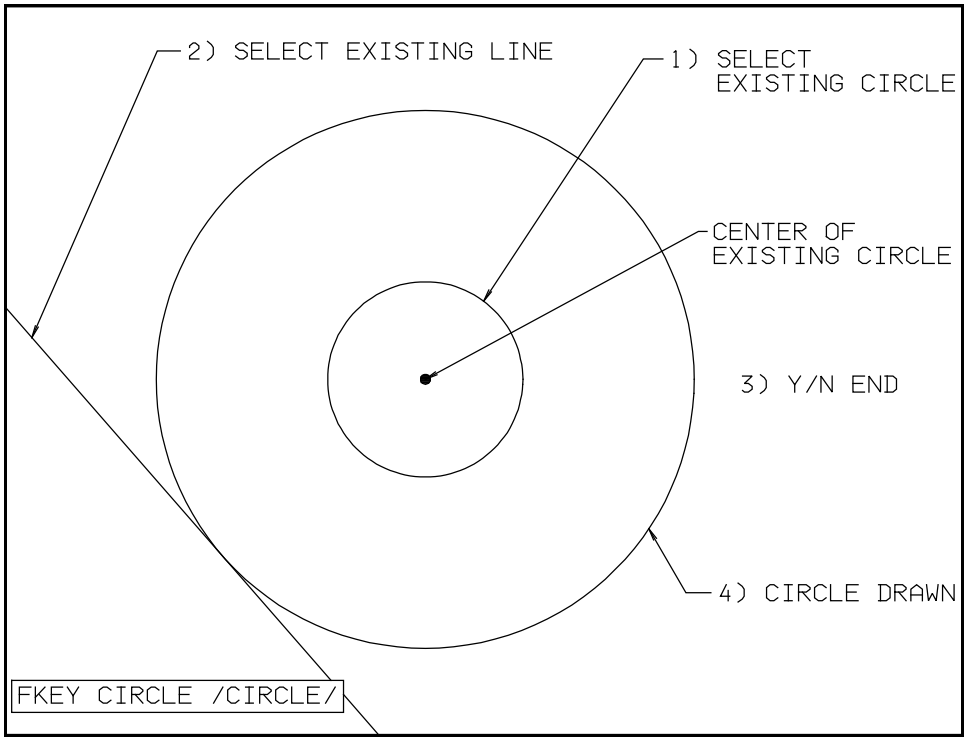

Figure 13 Example of Circle drawn with center on an existing circle and tangent to a line. (NODE PATH A,B,Q,R,U)

To create this circle SELECT FKey CIRCLE and submenu /CIRCLE/ and follow these steps:

1. SELECT an existing circle on the screen. This center of this circle will become the center of the new circle.

2. SELECT an existing line on the screen. This circle will be drawn tangent to this line.

3. Press Y/N button on mouse.

4. The Circle is drawn centered on the existing circle and tangent to the line.

10) CIRCLE REF CENTER OF EXISTING CIRCLE AND TANGENT TO LINE AT KEYED RADIUS:

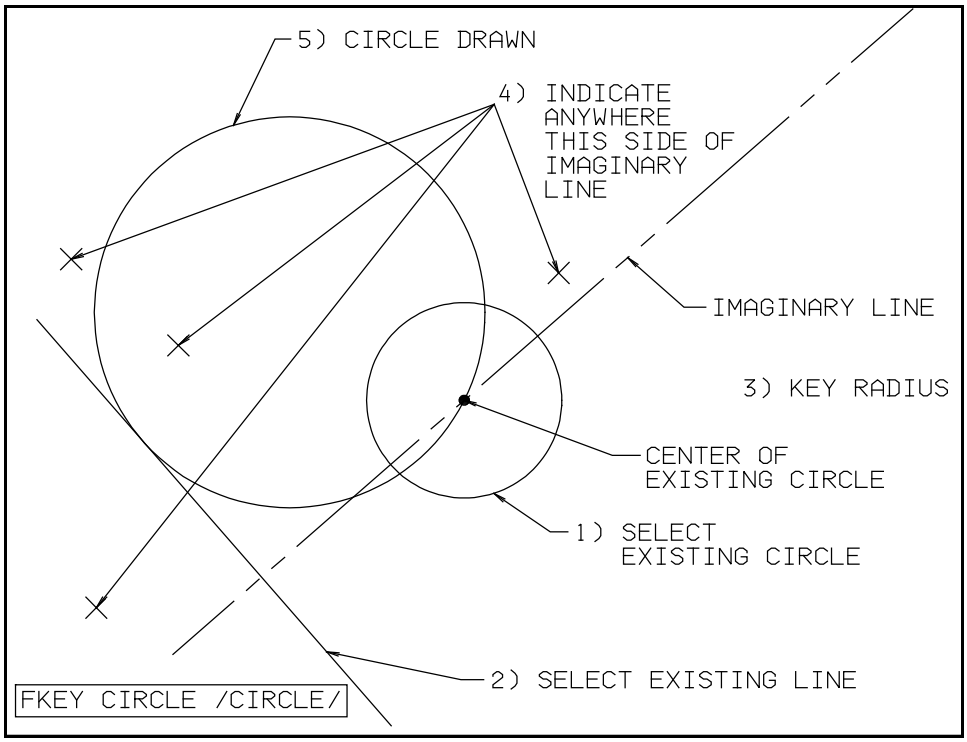

Figure 14 Example of Circle drawn with center on an existing circle and tangent to a line at keyed radius. (NODE PATH A,B,Q,R,S,T)

To create this circle SELECT FKey CIRCLE and submenu /CIRCLE/ and follow these steps:

1. SELECT an existing circle on the screen. This center of this circle will become a point on the circumference of the new circle.

2. SELECT an existing line on the screen. This circle will be drawn tangent to this line.

3. KEY the radius of the required circle.

4. INDICATE once anywhere one side of the imaginary line. (See Figure 14 on pg 13-18)

5. The circle is drawn.

Note that there are two possible circles that can be drawn by indicating on either side of the imaginary line.

11) CIRCLE TANGENT TO 2 LINES AT KEYED RADIUS:

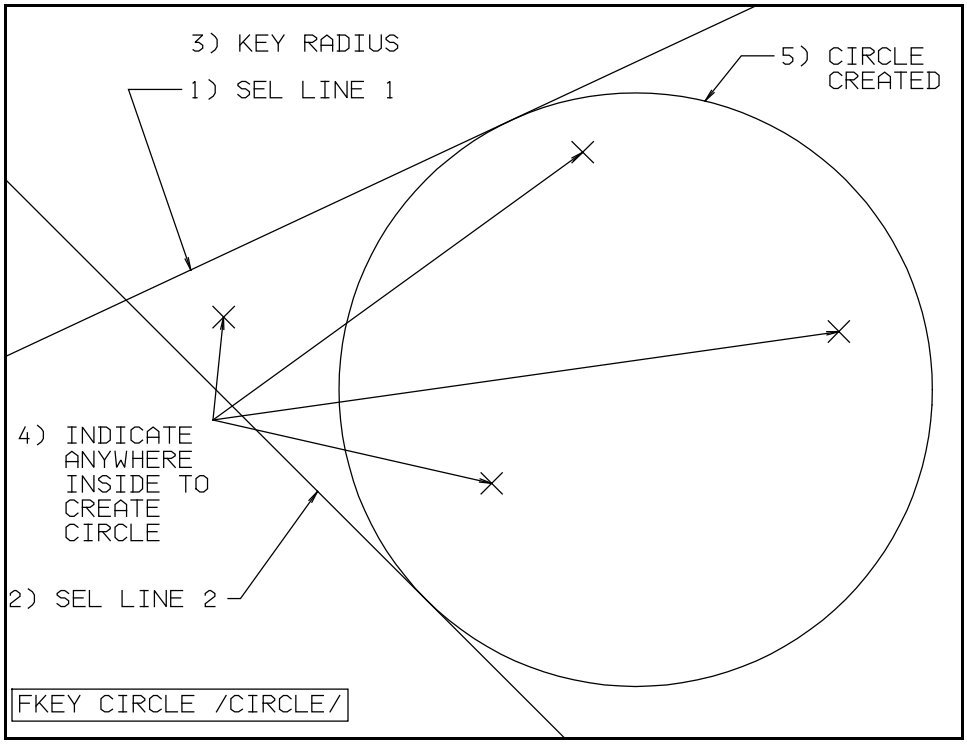

Figure 15 Example of Circle drawn with tangent to two lines at keyed radius. (NODE PATH A,B,W,X,AA,BB)

To create this circle SELECT FKey CIRCLE and submenu /CIRCLE/ and follow these steps:

1. SELECT an existing line on the screen. The circle will be drawn tangent to this line.

2. SELECT another existing line on the screen. The circle will be drawn tangent to this line.

3. KEY the radius of the required circle.

4. INDICATE anywhere inside the two selected lines to show the approximate location of the center of the circle.

5. The circle is drawn.

12) CIRCLE DRAWN THROUGH POINT, TANGENT TO LINE AT KEYED RADIUS:

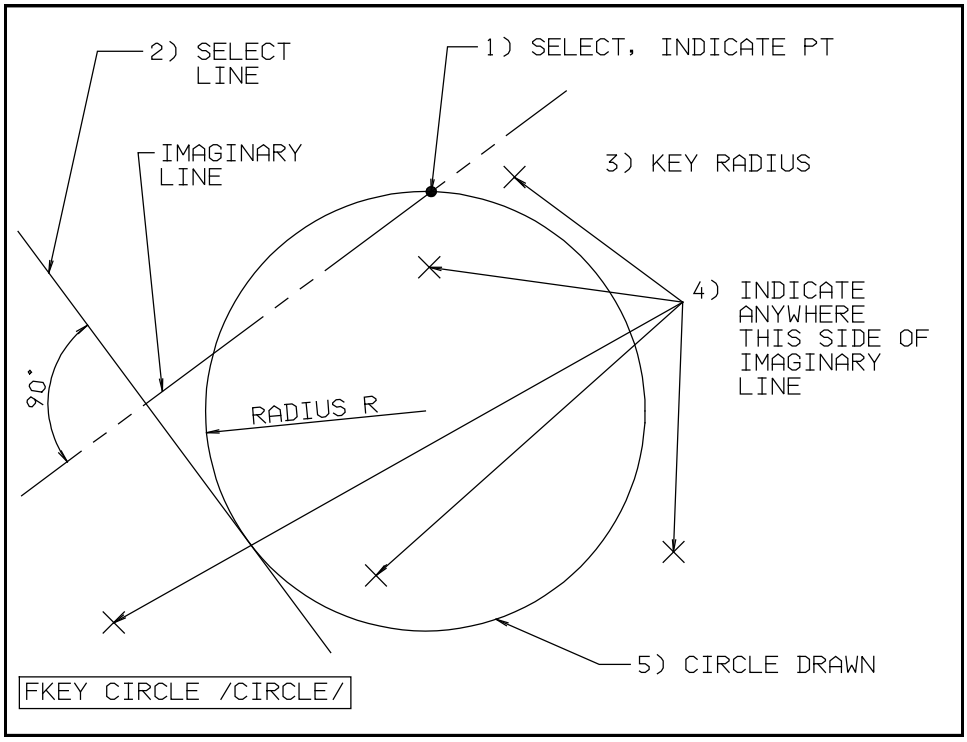

Figure 16 Example of Circle drawn through a point, tangent to a line and at a keyed radius. (NODE PATH A,B,L,M,N)

To create this circle SELECT FKey CIRCLE and submenu /CIRCLE/ and follow these steps:

1. SELECT an existing point on the screen. The circle will be drawn through this point.

2. SELECT an existing line on the screen. The circle will be drawn tangent to this line.

3. KEY the radius of the required circle.

4. INDICATE to one side of the imaginary line (See Figure Figure 16 on page 13-20). The center of the circle drawn will be on the indicated side of the imaginary line.

5. The Circle is drawn.

Note that there are two possible circles that can be drawn; one on each side of the imaginary line.

All menus in Micro CADAM are intelligent. They anticipate your actions wherever possible. The results depend on the sequence that the **SELECT, INDICATE, KEY** and **Y/N** keys are pressed. This is summarized for FKey / CIRCLE / and shown in chart form below:

FKEY CIRCLE /CIRCLE/ ACTION SUMMARY

CIRCLE NO.	TO CREATE	1ST ACTION	2ND ACTION	3RD ACTION	4TH ACTION	NODEPATH
BEGINNER SECTION						
1	Circle drawn at co-ordinate X,Y and Radius R	KEY X,Y,R				A,K
2	Circle drawn center on existing pt at keyed radius	SEL Pt	KEY Radius			A,B,C,P
3	Circle drawn through 3 ind pts	IND Pt	IND Pt	IND Pt		A,C,D,E,J
3	Circle drawn through 3 sel pts	SEL Pt	SEL Pt	SEL Pt		A,B,C,D,E,I
4	Circle drawn, 1st pt being Center, 2nd pt on circumference	SEL Pt	SEL PT	Y/N End		A,B,C,D,E,H
5	Circle drawn tangent to 3 lines	SEL Line 1	SEL Line 2	SEL Line 3	IND Center	A,B,W,X,Y,Z
6	Circle, existing radius changed	SEL Circle	KEY minus radius			A,B,Q,V
ADVANCED SECTION						
7	Circle drawn, 2 pts on circumference with keyed radius	SEL Pt	SEL Pt	KEY Radius	IND Center	A,B,C,D,E,F, G
8	Circle drawn center on existing pt & tangent to existing line	SEL Pt	SEL Line	Y/N End		A,B,C,L,O
9	Circle drawn center on existing circle & tangent to existing line	SEL Circle	SEL Line	Y/N End		A,B,Q,R,U
10	Circle drawn through existing circle center tangent to existing line at keyed radius	SEL Circle	SEL Line	KEY Radius	IND Center	A,B,Q,R,S,T
11	Circle drawn tangent to 2 existing lines at keyed radius	SEL Line 1	SEL Line 2	KEY Radius	IND Center	A,B,W,X,AA, BB
12	Circle drawn through existing pt, tangent to existing line at keyed radius	SEL Pt	SEL Line	KEY Radius	IND Center	A,B,C,L,M,N

FKey CIRCLE

SUBMENU /CIRCLE/

(ARC OPTION)

Fkey CIRCLE (ARC) is a Y/N option under FKey Circle that allows you to draw arcs. The different ways to draw arcs are listed as follows:

BEGINNER: (See Figure 17 on Page 13-26 for the Beginner Road Map for Circle (Arc Option))		
ARC NO.	DESCRIPTION	PAGE NO.
1	Arc drawn CCW through 3 points	13-27
2	Arc drawn through 2 points at keyed radius	13-28
ADVANCED: (See Figure 20 on Page 13-30 for the Advanced Road Map for Circle (Arc Option))		
ARC NO.	DESCRIPTION	PAGE NO.
3A	Arc drawn at co-ordinate X,Y with radius R starting at angle 1 (angle keyed in) and running CCW to angle 2 (angle keyed in)	13-31
3B	Arc drawn at co-ordinate X,Y with radius R starting at angle 1 (defined by a point) and running CCW to angle 2 (defined by a point)	13-32
4A	Arc drawn tangent to line 1, line 2 and line 3 with inscribed circle radius	13-34
4B	Arc drawn tangent to line 1 and line 2 with keyed radius	13-35
5	Arc drawn through point 1 tangent to line at radius	13-36

After SELECTING FKey CIRCLE if the first thing you do is to press the Y/N button on the mouse you will activate the ARC option. Some arcs are constructed directly while others require you to construct a circle first and then define which part of the circle is to be left for the arc. All angles are measured CCW (i.e. counter clockwise) so the first angle you enter will be approached from the CCW direction; the second angle is entered and the arc is created from the first angle in a CCW direction to the second angle.

FKey CIRCLE

SUBMENU /CIRCLE/

(ARC OPTION)

BEGINNER

SECTION

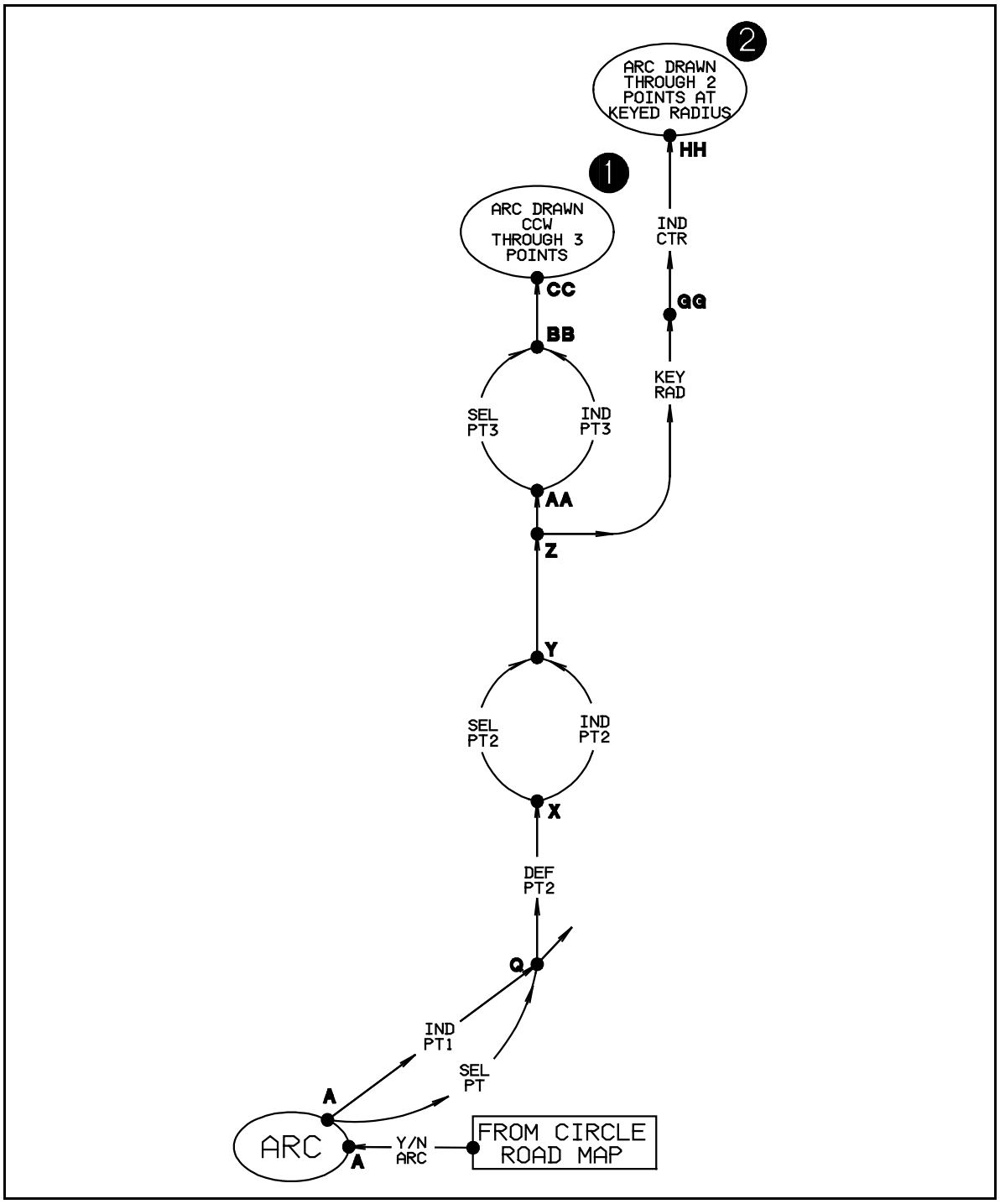

Figure 17 Beginner Road Map for / CIRCLE / (ARC Option)

1) ARC DRAWN CCW THROUGH 3 POINTS:

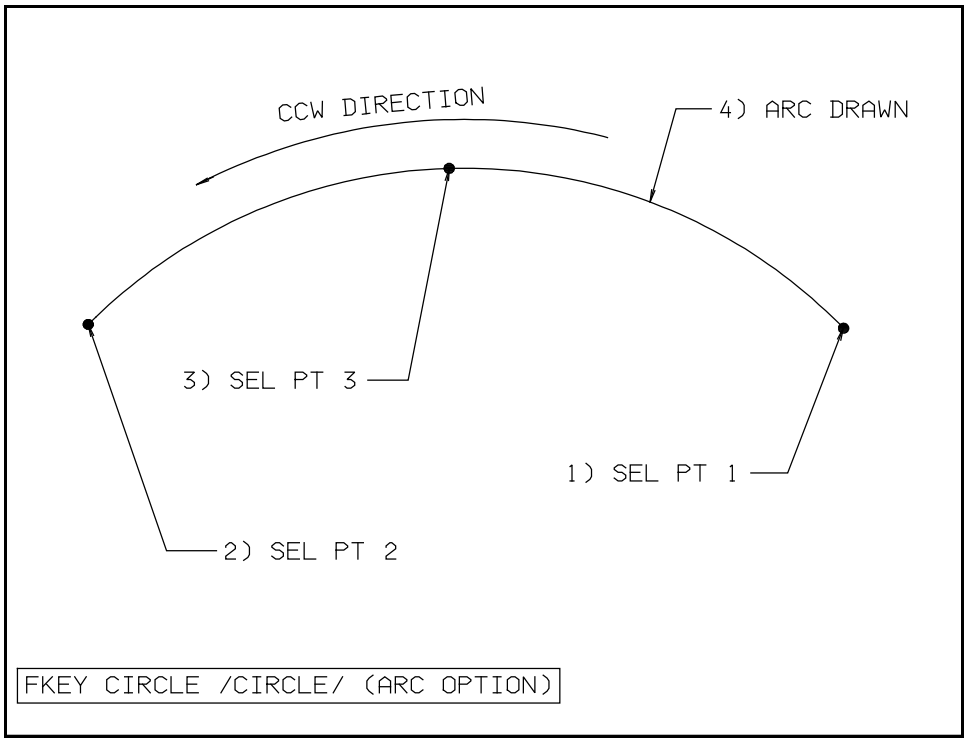

Figure 18 Example for an arc drawn CCW through 3 points (NODE PATH A,Q,X,Y,Z,AA,BB,CC)

To create this arc SELECT FKey CIRCLE /CIRCLE/, Y/N and follow these steps:

1. Select an existing point on the screen. This will be the starting point for the arc. The arc will start at this point and continue in a CCW (i.e. counter clockwise) direction.

2. Select a second existing point on the screen. This will be the arc end point.
3. Select a third existing point on the screen. This point is always between the first point and the second point. The arc will pass through this point.

4. An arc is drawn from the first point selected, in a counter clockwise direction to the second point selected, and passing through the third point.

2) ARC DRAWN THROUGH 2 POINTS AT KEYED RADIUS:

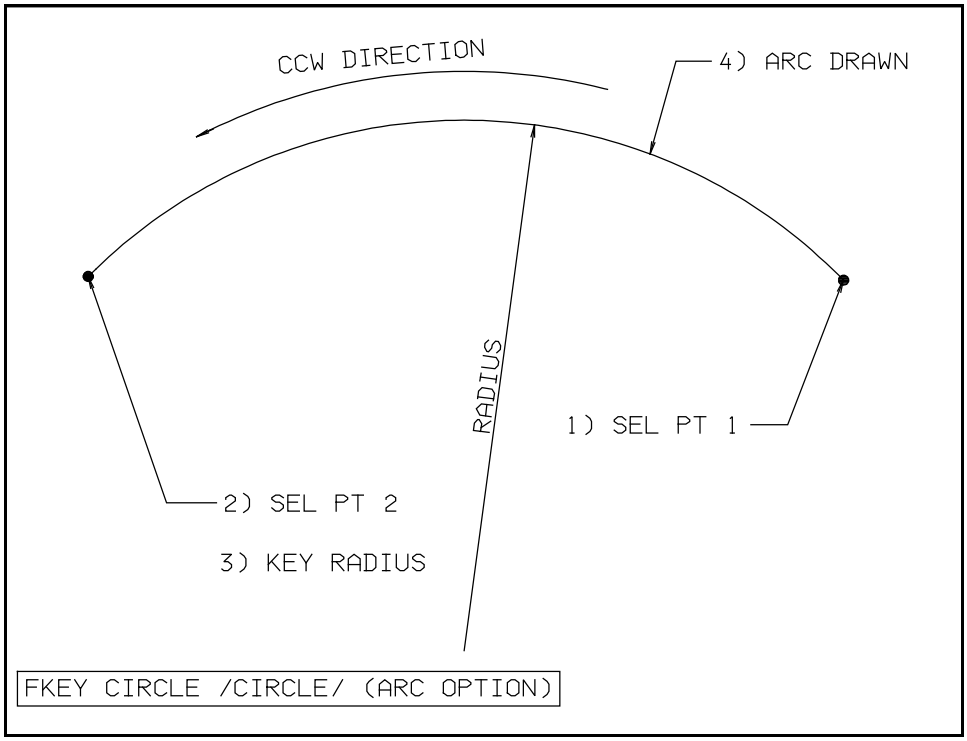

Figure 19 Example for an arc drawn through 2 points at keyed radius (NODE PATH A,Q,X,Y,Z,GG,HH)

To create this arc SELECT FKey CIRCLE /CIRCLE/, Y/N and follow these steps:

1. Select an existing point on the screen. This will be the starting point for the arc. The arc will start at this point and continue in a CCW (i.e. counter clockwise) direction.

2. Select a second existing point on the screen. This will be the ending point for the arc.

3. KEY a radius for the arc.

4. INDICATE center

5. An arc is drawn from the first point selected, in a counter clockwise direction to the second point selected, at the keyed radius

FKey CIRCLE

SUBMENU /CIRCLE/

(ARC OPTION)

ADVANCED

SECTION

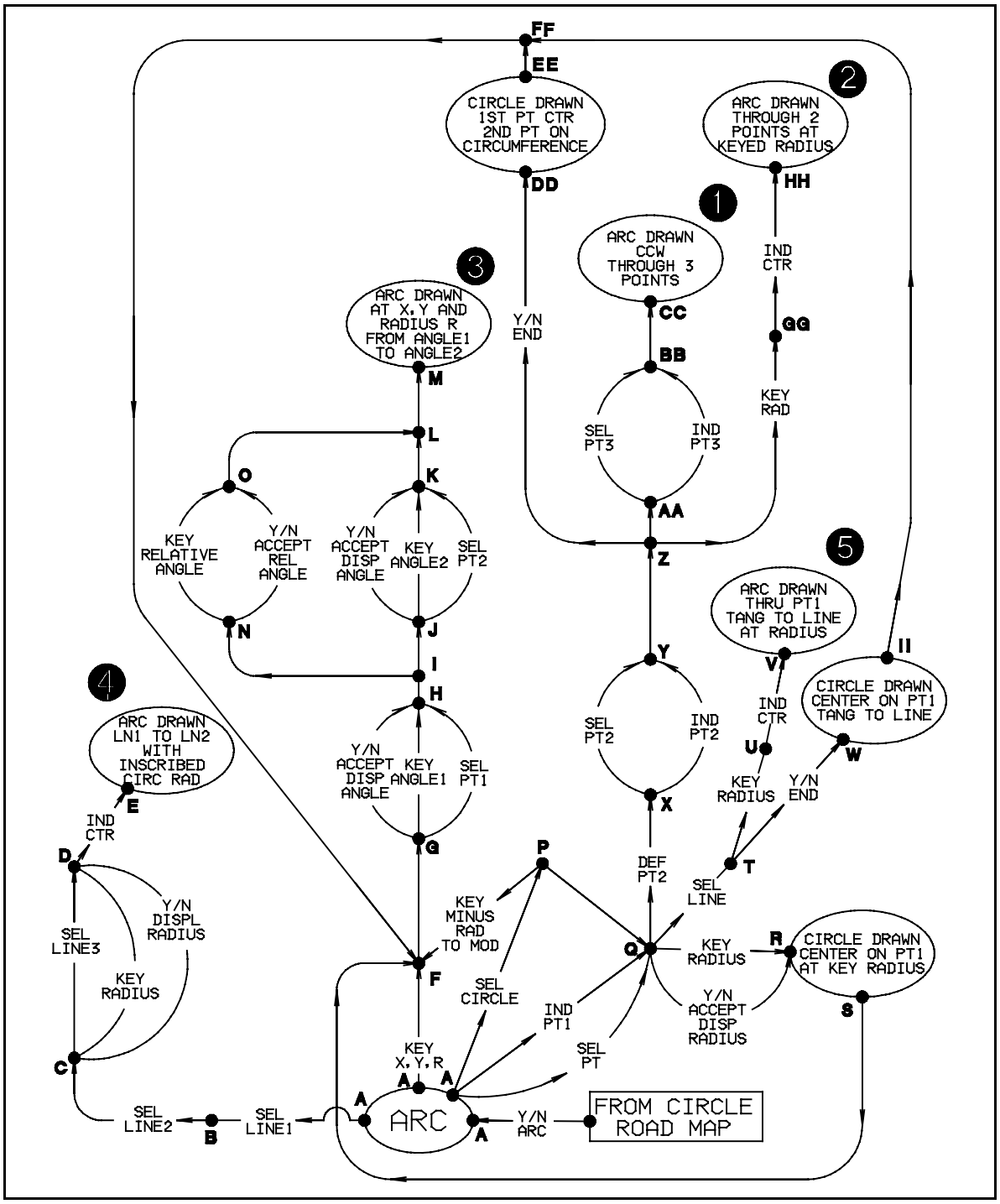

Figure 20 Advanced Road Map for / CIRCLE / (ARC Option)

3A) ARC DRAWN AT CO-ORDINATE X,Y WITH RADIUS R AT KEYED ANGLE 1 AND RUNNING CCW TO KEYED ANGLE 2:

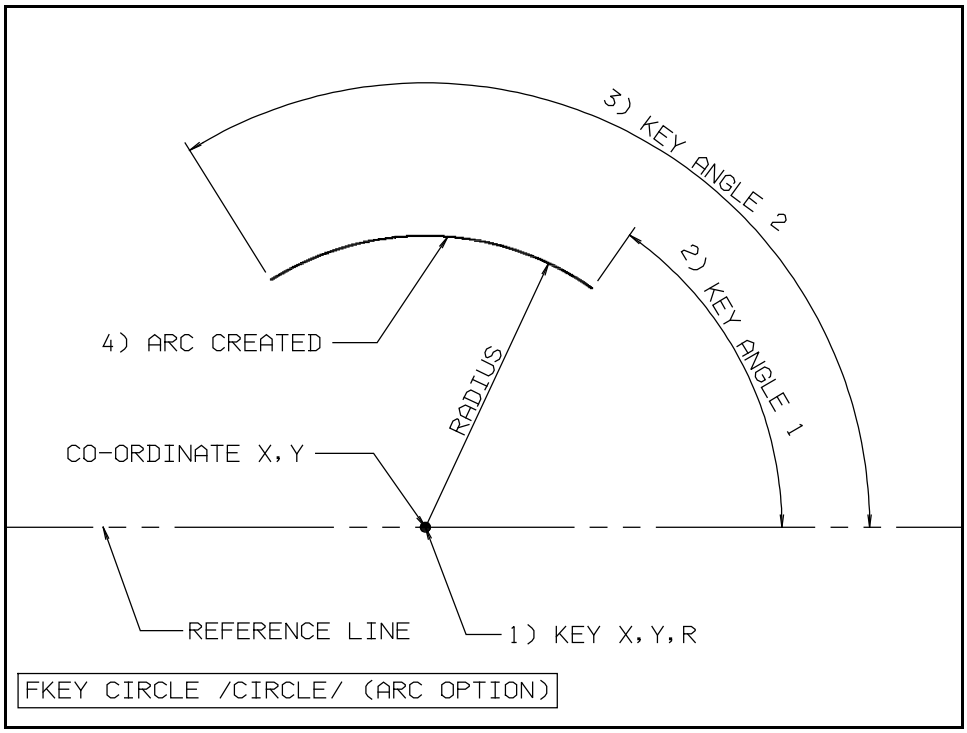

Figure 21 Example of an arc drawn at co-ordinate X,Y with Radius R from Angle 1 to Angle 2 (NODE PATH A,F,G,H,I,J,K,L,M)

To create this arc SELECT FKey CIRCLE /CIRCLE/, Y/N and follow these steps:

1. KEY X,Y,R where X,Y is the co-ordinate of the center of the arc and R is the radius of the arc.

2. Key Angle 1. This will be the starting angle for the arc. This angle begins at a horizontal line (i.e. 0 degrees is the horizontal line).

3. KEY Angle 2. This will be the ending angle for the arc.

4. An arc is created. It is centered on co-ordinate X,Y with a radius of R; it starts at angle 1 and runs CCW to angle 2.

3B) ARC DRAWN AT CO-ORDINATE X,Y WITH RADIUS R AT ANGLE 1 DEFINED BY POINT AND RUNNING CCW TO ANGLE 2 DEFINED BY A POINT:

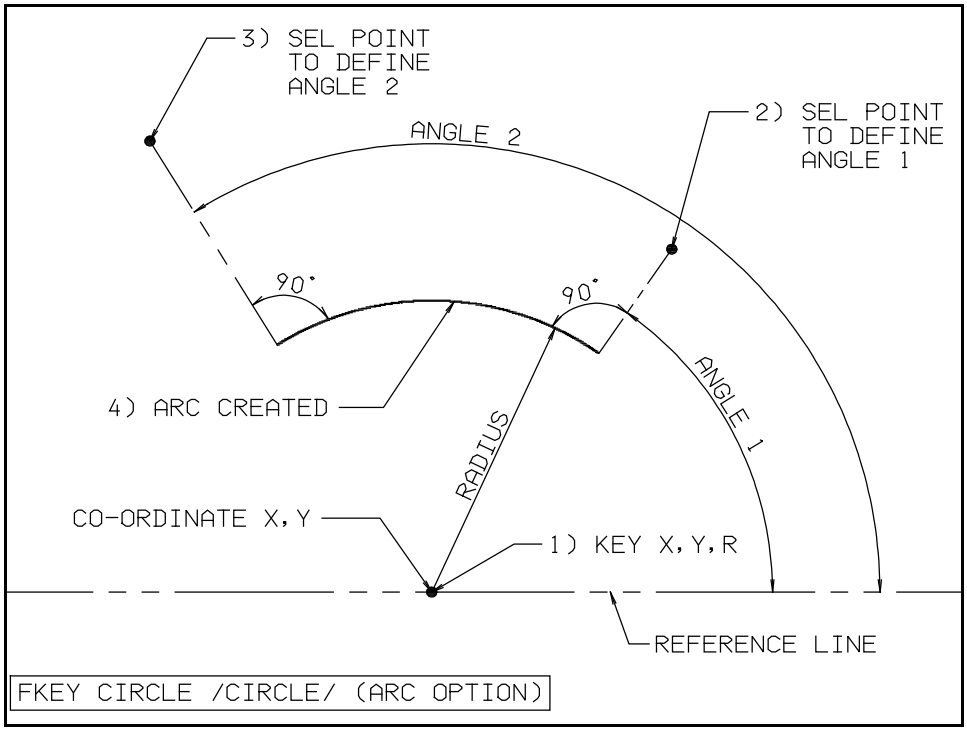

Figure 22 Example of an arc drawn at co-ordinate X,Y with Radius R from Angle 1 defined by a point to Angle 2 defined by a point (NODE PATH A,F,G,H,I,J,K,L,M)

To create this arc SELECT FKey CIRCLE /CIRCLE/, Y/N and follow these steps:

1. KEY X,Y,R where X,Y is the co-ordinate of the center of the arc and R is the radius of the arc.

2. Select a point that defines Angle 1. The point is projected normal to the circle. This will be the starting angle for the arc. This angle begins at a horizontal line (i.e. 0 degrees is the horizontal line).

3. SELECT a point that defines Angle 2. The point is projected normal to circle. This will be the ending angle for the arc.

4. An arc is created. It is centered on co-ordinate X,Y with a radius of R; it starts at angle 1 and runs CCW to angle 2.

4A) ARC DRAWN TANGENT TO LINE 1, LINE 2 AND LINE 3 WITH INSCRIBED CIRCLE RADIUS:

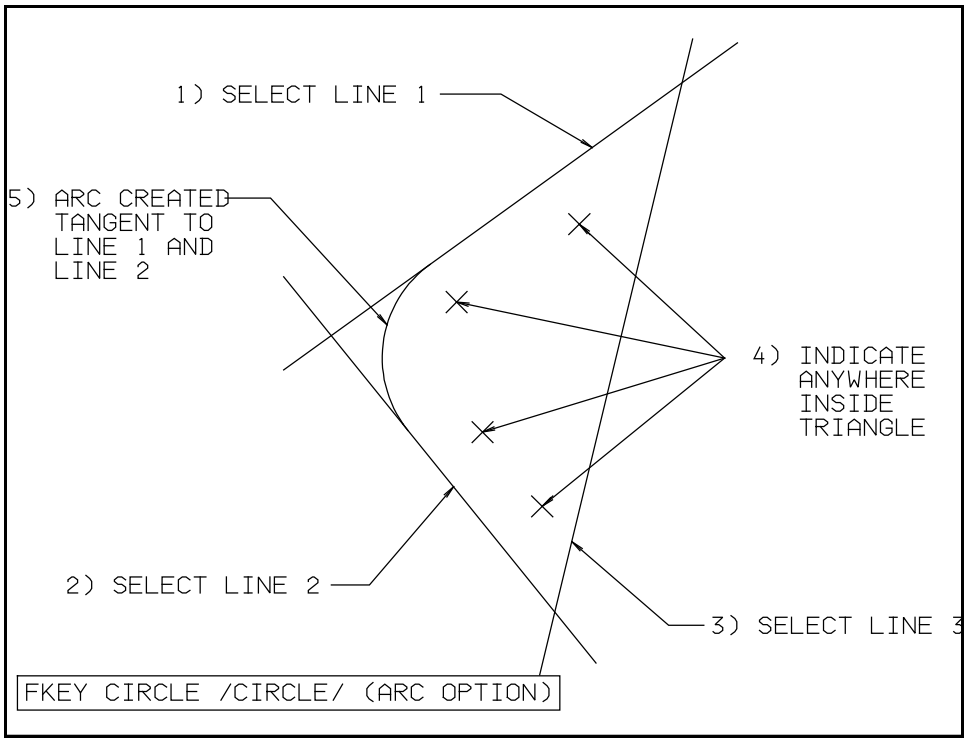

Figure 23 Example of an arc drawn from Line 1 to Line 2 with inscribed Circle Radius (NODE PATH A,C,D,E)

To create this arc SELECT FKey CIRCLE /CIRCLE/, Y/N and follow these steps:

1. SELECT Line 1. The arc will be drawn tangent to this line and run in a CCW direction until it hits the second line.

2. SELECT Line 2. The arc will also be drawn tangent to this line.

3. SELECT Line 3. A circle is temporarily inscribed tangent to the 3 lines and then immediately relimited back to the 1st and second lines.

4. INDICATE center.

5. An arc is created tangent to Line 1 in a CCW direction and tangent to Line 2. Note that the order of selection is important

4B) ARC DRAWN TANGENT TO LINE 1, AND LINE 2 WITH KEYED RADIUS:

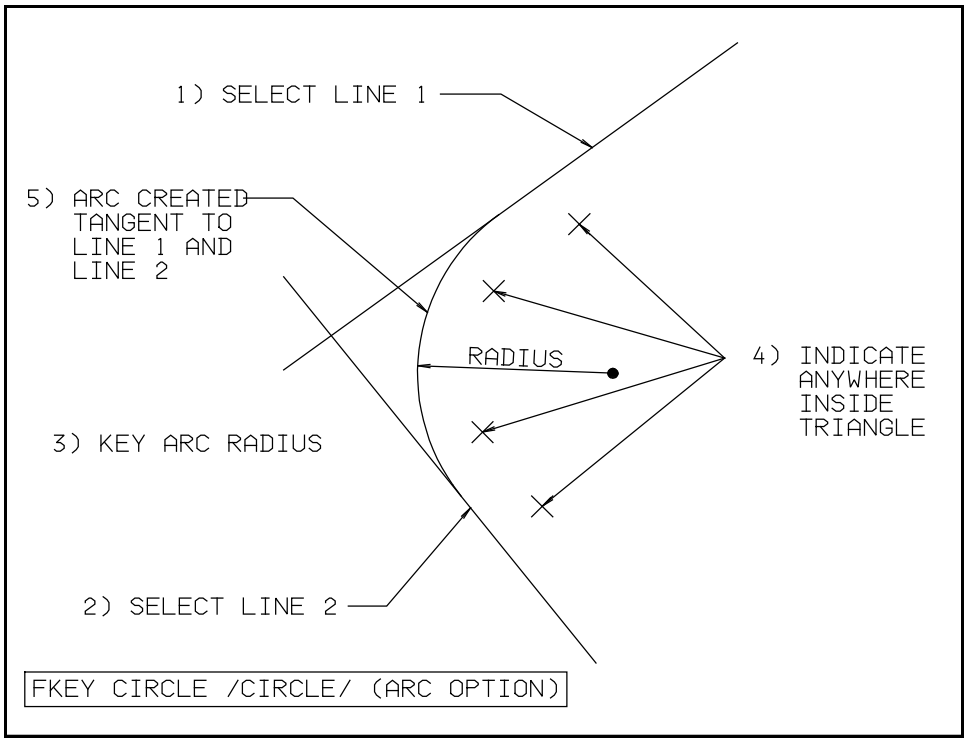

Figure 24 Example of an arc tangent to two lines with keyed radius (NODE PATH A,B,C,D,E)

To create this arc SELECT FKey CIRCLE /CIRCLE/, Y/N and follow these steps:

1. SELECT Line 1. The arc will be drawn tangent to this line and run in a CCW direction until it hits the second line.

2. SELECT Line 2. The arc will also be drawn tangent to this line.

3. KEY the arc Radius.

4. INDICATE anywhere in the quadrant where you want the arc to appear.

5. An arc is created tangent, in a CCW direction from Line 1 to Line 2, with the keyed radius and in the indicated quadrant.

5) ARC DRAWN THROUGH A POINT TANGENT TO A LINE AT A KEYED RADIUS:

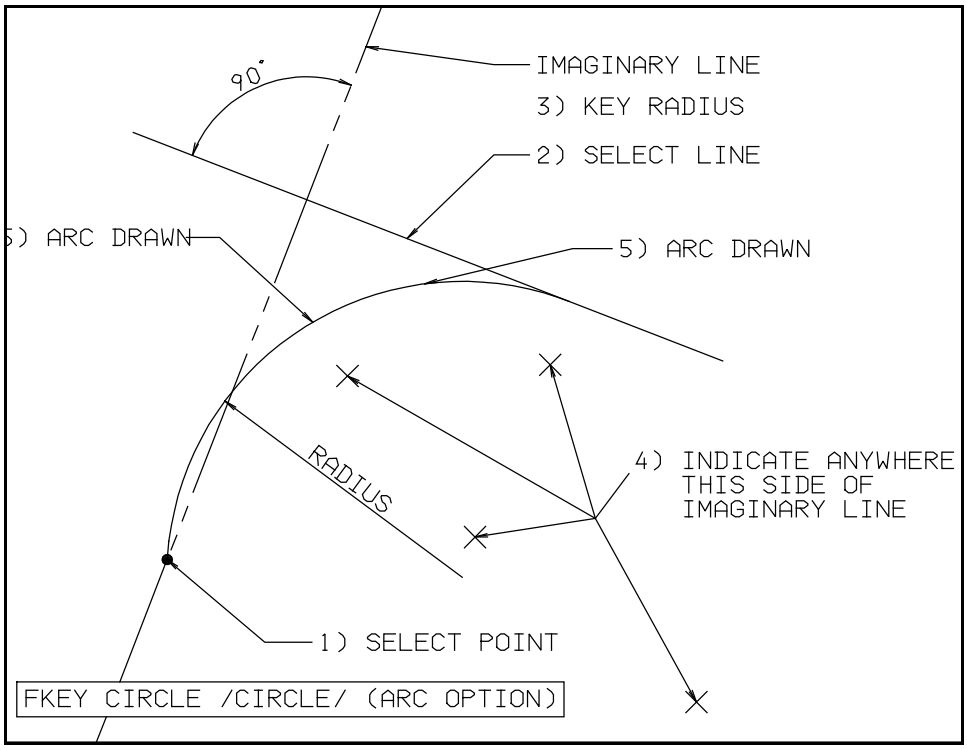

Figure 25 Example of an arc drawn through a point and tangent to a line at a Radius (NODE PATH A,Q,T,U,V)

To create this arc SELECT FKey CIRCLE /CIRCLE/, Y/N and follow these steps:

1. SELECT an existing point. The arc will start at this point.

2. SELECT Line. The arc will be drawn tangent to this line.

3. KEY the arc Radius.

4. INDICATE anywhere in the quadrant where you want the arc to appear. There is an imaginary line through the selected point and normal to the selected line. Indicate anywhere in the quadrant as shown.

5. The arc is drawn starting at the selected point and tangent to the selected line at the keyed radius.

All menus in Micro CADAM are intelligent. They anticipate your actions wherever possible. The results depend on the sequence that the **SELECT, INDICATE, KEY** and **Y/N** keys are pressed. This is summarized for FKey / CIRCLE / (ARC Option) and shown in chart form below:

FKEY CIRCLE /CIRCLE/ (ARC Option) ACTION SUMMARY

ARC NO.	TO CREATE	1ST ACTION	2ND ACTION	3RD ACTION	4TH ACTION	NODEPATH
BEGINNER SECTION						
1	Arc drawn CCW (Counter Clockwise) through 3 points	SEL Pt 1	SEL Pt 2	SEL Pt 3		A,Q,X,Y,Z,AA ,BB,CC
2	Arc drawn through 2 points at keyed radius	SEL Pt 1	SEL Pt 2	KEY Radius	IND Center	A,Q,X,Y,Z,G G,HH
ADVANCED SECTION						
3A	Arc drawn at co-ordinate X,Y and Radius R, from keyed angle 1 CCW to keyed angle 2	KEY X,Y,R	KEY Angle 1	KEY Angle 2		A,F,G,H,I,J,K, L,M
3B	Arc drawn at co-ordinate X,Y and Radius R, from angle 1 (defined by point) CCW to angle 2 (defined by point)	KEY X,Y,R	SEL Pt	SEL Pt		A,F,G,H,I,J,K, L,M
4A	Arc drawn tangent to line 1 and line 2 (and referencing line 3) with an inscribed circle radius	SEL Line 1	SEL Line 2	SEL Line 3	IND Center	A,B,C,D,E
4B	Arc drawn tangent to line 1 and line 2 with a keyed circle radius	SEL Line 1	SEL Line 2	KEY Radius	IND Center	A,B,C,D,E
5	Arc drawn through a point tangent to a line at a radius	SEL Pt	SEL Line	KEY Radius	IND Center	A,Q,T,U,V
6	Arc drawn : Reference Circle drawn 1st Point is the center, 2nd Point is on the circumference	SEL Pt	SEL Pt	Y/N End	Continue at Node F leading to Arcs #3A and #3B	A,Q,X,Y,Z,DD ,EE,FF,F,G,H ,I,J,K,L,M
7	Arc drawn : Reference Circle drawn centered on a Point at Keyed Radius	SEL Pt	KEY Radius	Continue at Node F leading to Arcs #3A and #3B		A,Q,R,S,F,G, H,I,J,K,L,M
8	Arc drawn : Reference Circle drawn centered on a point and tangent to a line	SEL Pt	SEL Line	Y/N End	Continue at Node F leading to Arcs #3A and #3B	A,Q,T,W,II,FF ,F,G,H,I,J,K,L ,M

FKey CIRCLE

SUBMENU / ELLIPSE /

Ellipses are common drafting elements found in many engineering drawings, especially those that contain non-axial views of holes and cylinders. Micro CADAM creates true ellipses, not ellipses approximated by line segments. This ellipse is stored as a single entity, not as a concatenation of arcs. This allows a true representation and analysis of the geometry.

Each ellipse has a major axis and a minor axis, begins at 0 degrees and runs positive in the counter clockwise direction and can be rotated at any angle. See Figure 26 below.

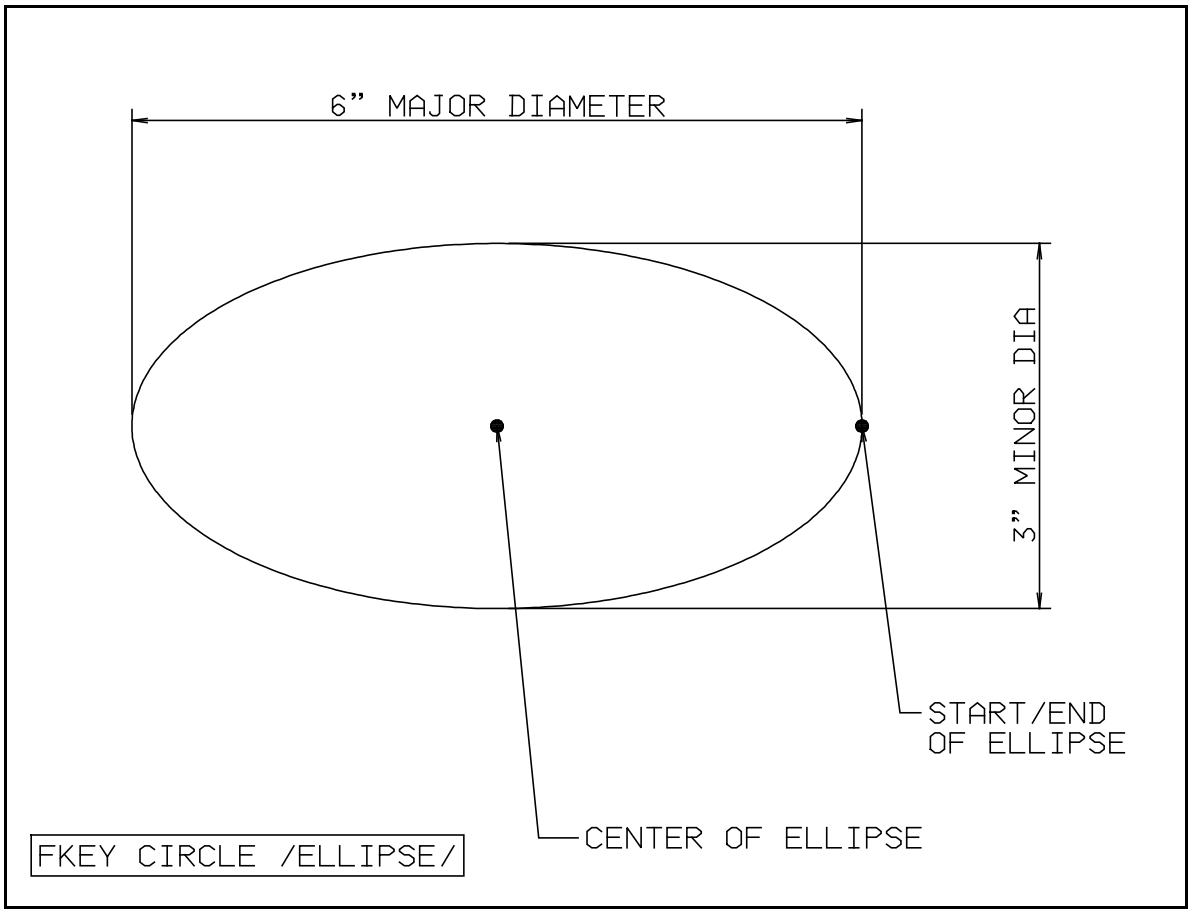

Figure 26 The Micro CADAM Ellipse

Fkey CIRCLE SubMenu /ELLIPSE/ allows you to draw ellipses. Each ellipse has been assigned an ellipse number. The same ellipse number is also referenced on the Ellipse Road Map and the Action Summary. The different ways to draw ellipses are shown in the beginner section and are listed with page numbers as follows:

BEGINNER: (See Figure 27 on Page 13-43 for the Beginner Road Map for Ellipse)

ELLIPSE NO.	DESCRIPTION	PAGE NO.
1	Ellipse created at a rotation angle of 0 deg.	13-44
2	Ellipse created at a rotation angle that has been keyed in	13-45
3	Ellipse created at an the same rotation angle as the angle of an existing line	13-46
4	Ellipse created by referencing an existing ellipse	13-47

FKey CIRCLE

SUBMENU / ELLIPSE /

BEGINNER

SECTION

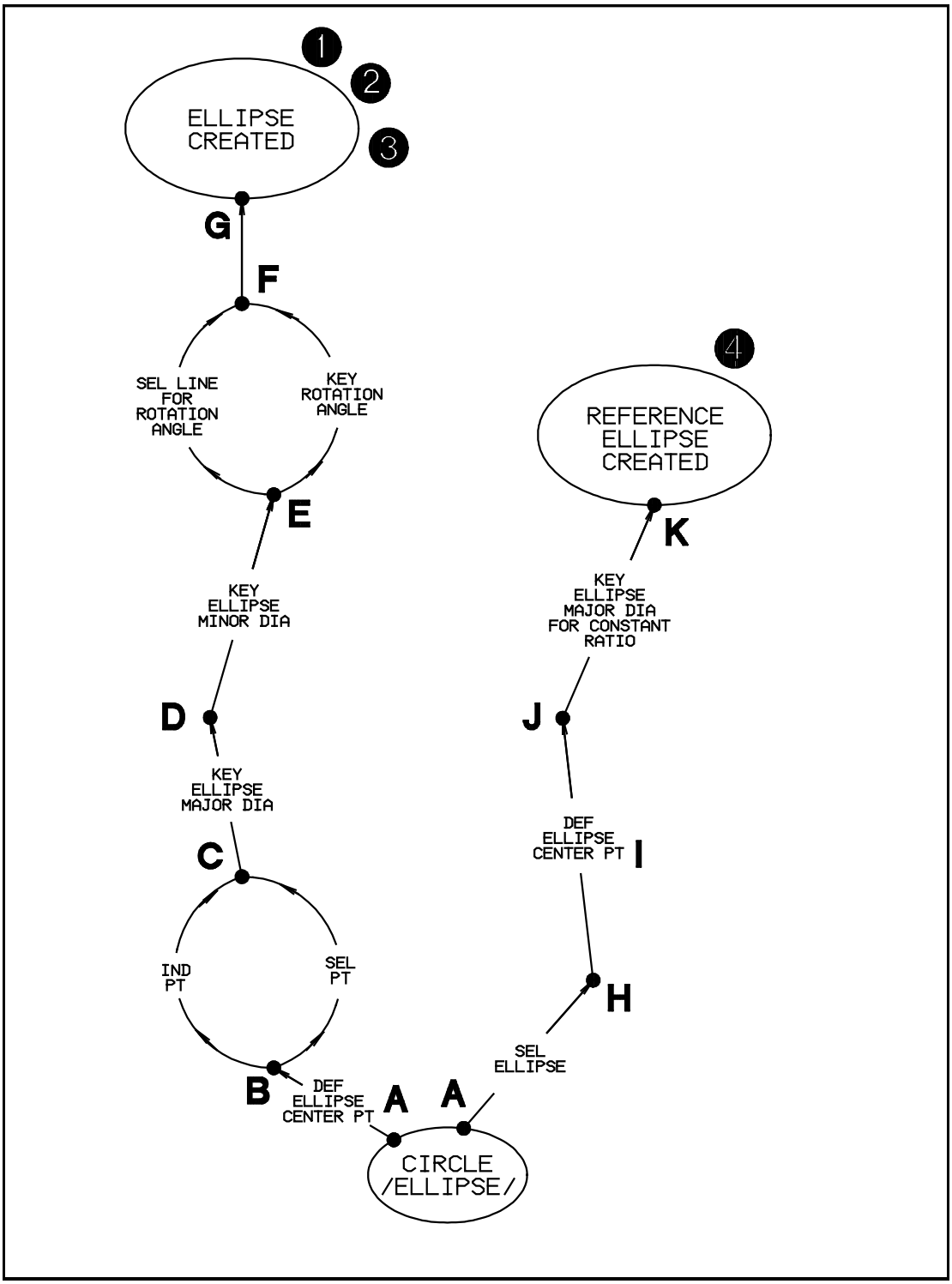

Figure 27 Beginner Road Map for CIRCLE /ELLIPSE/

1) AN ELLIPSE CREATED AT A ROTATION ANGLE OF 0 DEGREES:

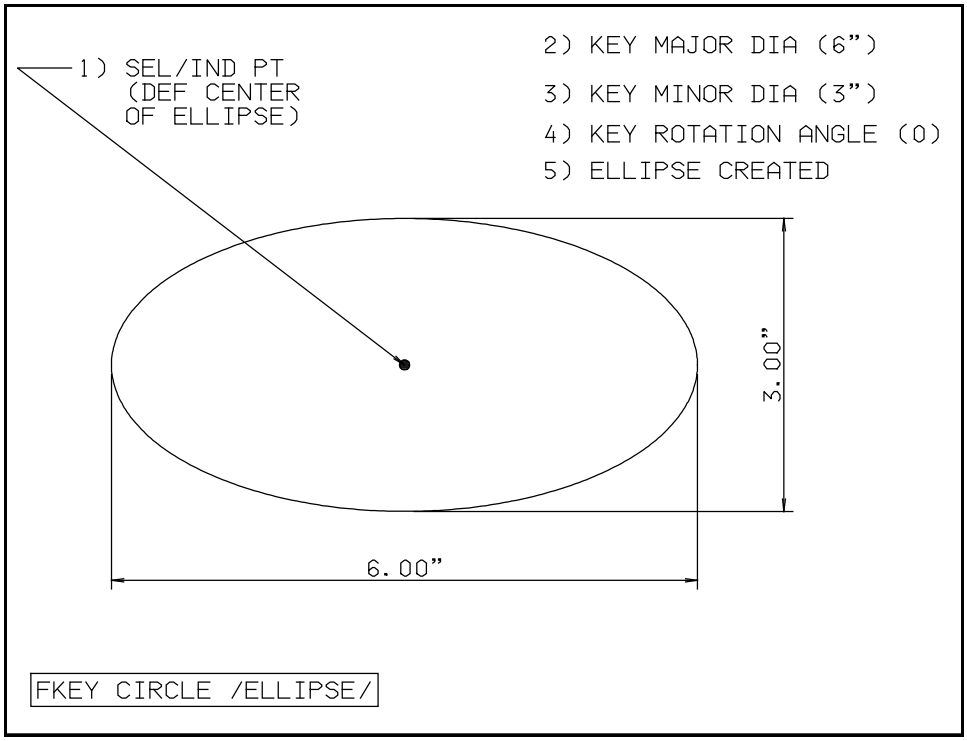

Figure 28 Example for an Ellipse created at a rotation angle of 0 degrees (NODE PATH A,B,C,D,E,F,G)

To create this ellipse SELECT FKey CIRCLE /ELLIPSE/ and follow these steps:

1. Define the center of the ellipse by SELECTING an existing point, INDICATING an approximate position OR KEYING in a co-ordinate.

2. KEY in the major diameter (6").

3. KEY in the minor diameter (3").

4. KEY in the rotation angle (0 degrees)

5. The ellipse is created.

2) ELLIPSE CREATED AT A ROTATION ANGLE THAT HAS BEEN KEYED IN:

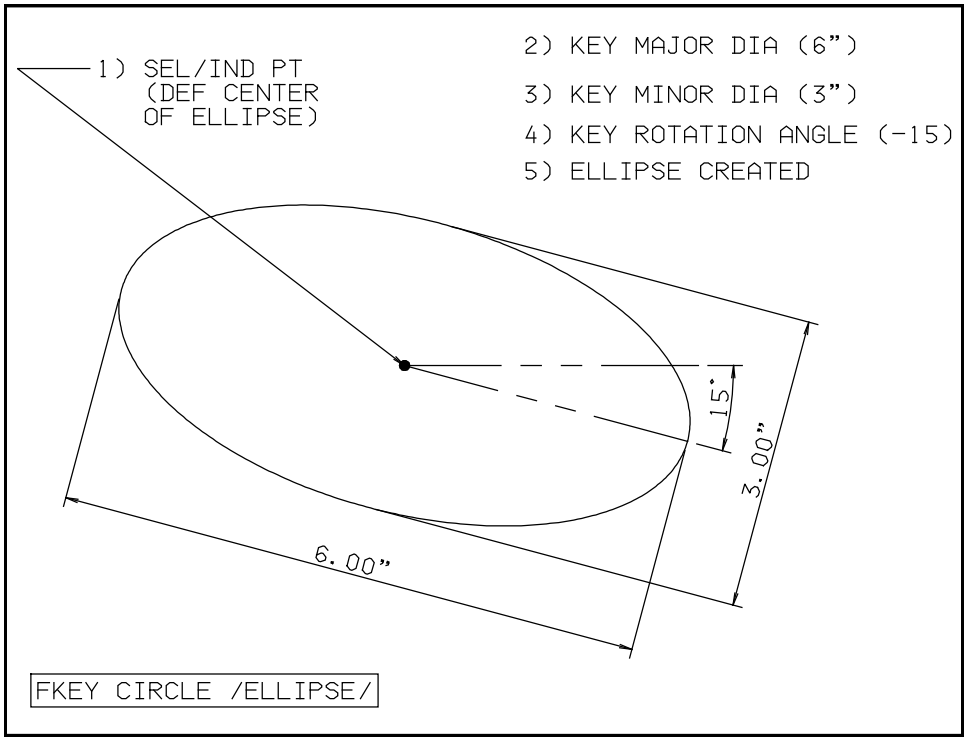

Figure 29 Example of Ellipse created at a rotation angle that has been keyed in (NODE PATH A,B,C,D,E,F,G)

To create this ellipse SELECT FKey CIRCLE /ELLIPSE/ and follow these steps:

1. Define the center of the ellipse by SELECTING an existing point, INDICATING an approximate position OR KEYING in a co-ordinate.

2. KEY in the major diameter (6").

3. KEY in the minor diameter (3").

4. KEY in the rotation angle (-15 degrees)

5. The ellipse is created.

3) ELLIPSE CREATED AT THE SAME ROTATION ANGLE AS THE ANGLE OF AN EXISTING LINE:

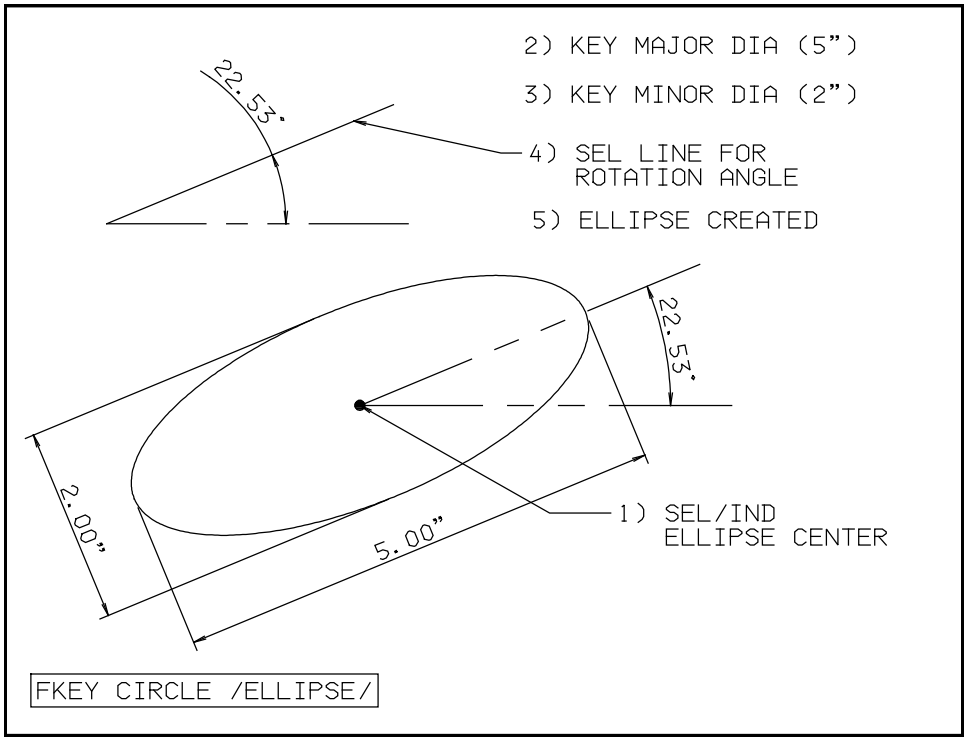

Figure 30 Example of Ellipse created at the same angle as the angle of an existing line (NODE PATH A,B,C,D,E,F,G)

To create this ellipse SELECT FKey CIRCLE /ELLIPSE/ and follow these steps:

1. Define the center of the ellipse by SELECTING an existing point, INDICATING an approximate position OR KEYING in a co-ordinate.

2. KEY in the major diameter (5").

3. KEY in the minor diameter (2").

4. SELECT an existing line. The angle of the line will become the rotation angle of the ellipse.

5. The ellipse is created.

4) ELLIPSE CREATED BY REFERENCING AN EXISTING ELLIPSE:

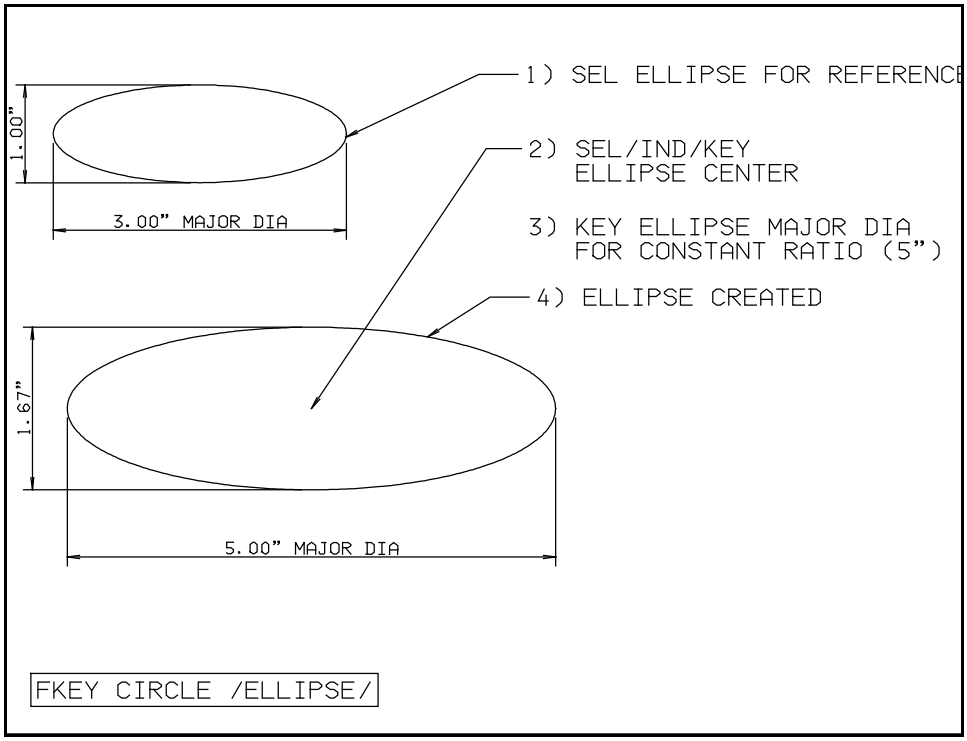

Figure 31 Example of an ellipse created by referencing an existing ellipse (NODE PATH A,H,I,J,K)

To create this ellipse SELECT FKey CIRCLE /ELLIPSE/ and follow these steps:

1. SELECT an existing ellipse. The ratio of the major diameter to the minor diameter (in the example 3" to 1" or 3:1) will be maintained in the new ellipse.

2. Define the center of the ellipse by SELECTING an existing point, INDICATING an approximate position OR KEYING in a co-ordinate.

3. KEY in the major diameter of the ellipse for constant ratio (5").

4. The ellipse is created. The major diameter to the minor diameter will maintain the ratio of 3:1 ... thus the minor diameter will become 5/3 or 1.67".

All menus in Micro CADAM are intelligent. They anticipate your actions wherever possible. The results depend on the sequence that the **SELECT, INDICATE, KEY** and **Y/N** keys are pressed. This is summarized for FKey / ELLIPSE / and shown in chart form below:

FKEY CIRCLE /ELLIPSE/ ACTION SUMMARY

ELLIPSE NO.	TO CREATE	1ST ACTION	2ND ACTION	3RD ACTION	4TH ACTION	NODEPATH
BEGINNER SECTION						
1	Ellipse created at a rotation angle of 0 degrees	SEL center of ellipse	KEY major diameter	KEY minor diameter	KEY Rotation Angle (0)	A,B,C,D,E,F, G
2	Ellipse created at a rotation angle that has been keyed in	SEL center of ellipse	KEY major diameter	KEY minor diameter	KEY Rotation Angle (-15)	A,B,C,D,E,F, G
3	Ellipse created at the same rotation angle as the angle of an existing line	SEL center of ellipse	KEY major diameter	KEY minor diameter	SEL line for rotation angle	A,B,C,D,E,F, G
4	Ellipse created by referencing an existing ellipse	SEL ellipse for reference	SEL center of ellipse	KEY ellipse major diameter for constant ratio		A,H,I,J,K

CHAPTER 14

FKey SPLINE

```
/ SPLINE / CONIC / LIN SPL / CONVERT /                    / END /
```

Figure 1 - Menu Item Tree for FKey SPLINE

INTRODUCTION TO SPLINES:

The mathematical spline used in MICRO CADAM is based on the loftsman's spline. This spline was normally a narrow strip of wood or plastic and was used by the loftsman to construct smooth curves between given points. The splines were given their shape by means of lead weights called "ducks". By varying the number and position of the lead weights, the spline could be made to pass through the points to form a smooth curve.

True splines have special significance in engineering design. A spline is the mathematical equivalent of the shape that a flexible beam or rod will take when constrained at the given points (the defining points of the spline, with or without restricting end vectors). This curve can be proven to minimize the stress levels within a structure, given the point constraints. MICRO CADAM splines maintain second-order continuity, which is very important when designing smooth cross-sections and surfaces.

MICRO CADAM uses a smooth cubic curve to construct a spline through up to 200 data points. The spline is used to create smooth curves or contours representing planes cut through surfaces. This type of spline is shown as option No. 1 in Figure 2 on page 14-2.

As an option, the starting and ending points of the spline can have their slopes defined. This forces the spline to 'start' at the slope angle and is analogous to clamping a thin piece of flexible steel in a vise rotated at the slope angle. This type of spline is shown as option No. 2 in Figure 2 on page 14-2.

Splines can also be created using the endpoints and vectors of a curved element for the starting and end points. This ensures that the spline will have the same slope as the curved element at its' point of attachment thus ensuring a smooth curve. This type of spline is shown as option No. 3 in Figure 2 on page 14-2.

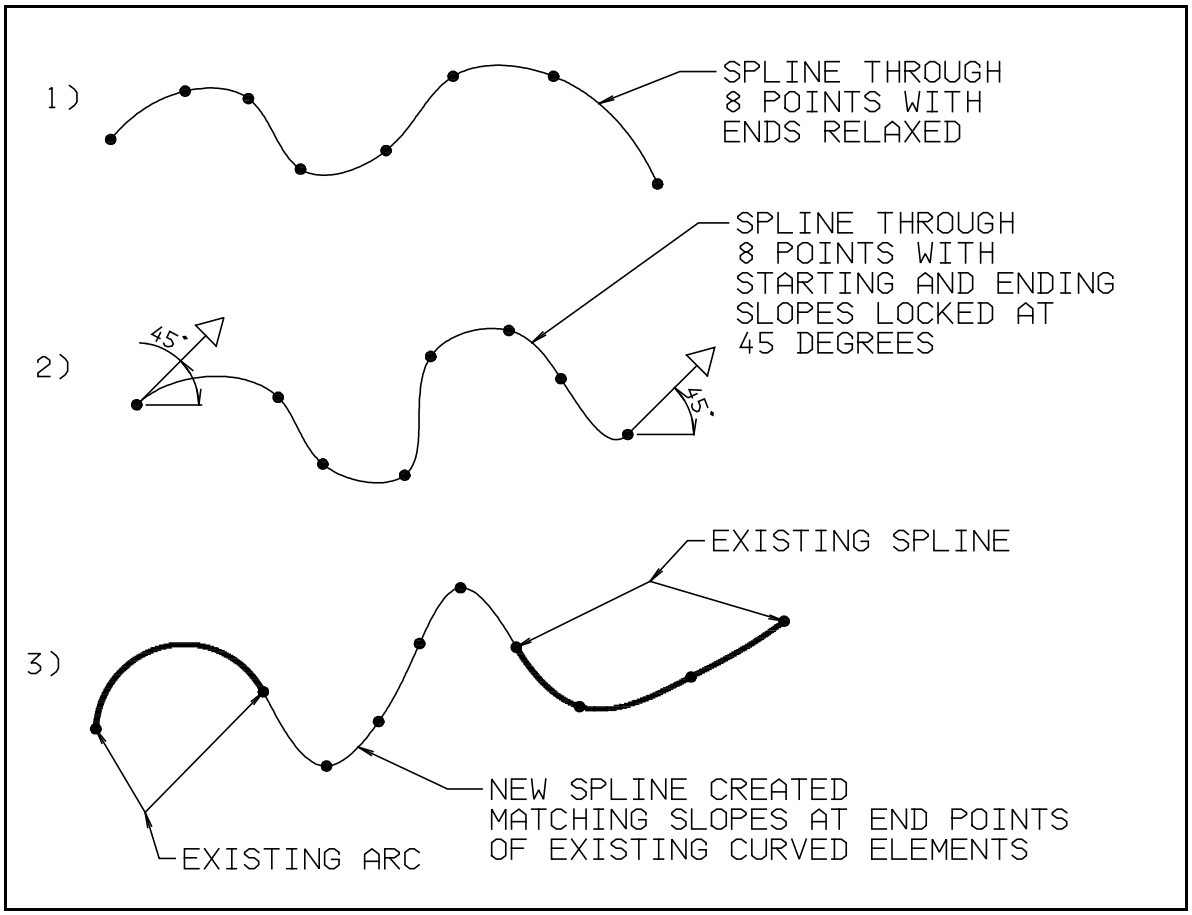

Figure 2 Examples of the three types of spline construction

INTRODUCTION TO CONICS:

CONICS are used to create splines that approximate parabolic, hyperbolic and elliptical cuts through a cone. This is illustrated in Figure 3 on page 14-3.

CONICS are valuable curves commonly used for aircraft design work. They allow a designer to easily and accurately define smooth, cross sectional curves of aerodynamic surfaces. The ability to easily create conics and modify them during their construction (by selecting a tangent line, a shoulder point, or keying in a ratio) provides the designer with great flexibility. This allows significant control over the behaviour of the curve, ensuring the cross section is designed properly, and adequate clearance for any internal features (frames, struts, etc. is provided). Using conics, the designer can ensure smooth, complex curves which maintain first order continuity (continuity of slope) at their intersections.

The three main methods of creating conics are:

- Selecting, indicating or keying a shoulder point
- Selecting a tangent line
- Keying in a ratio

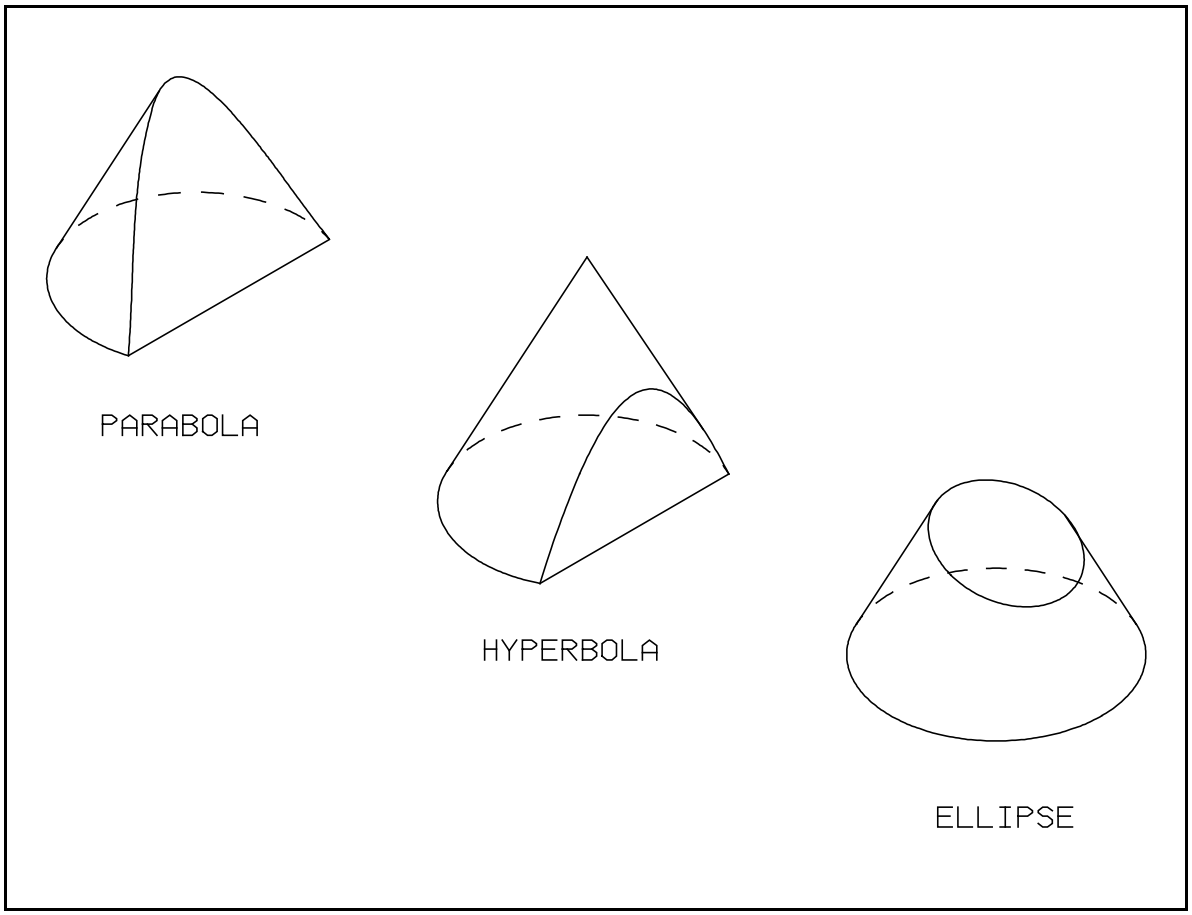

Figure 3 Examples of 3 different types of conics created by cuts through a cone

These three methods are illustrated in Figure 4 on page 14-4 and explained as follows:

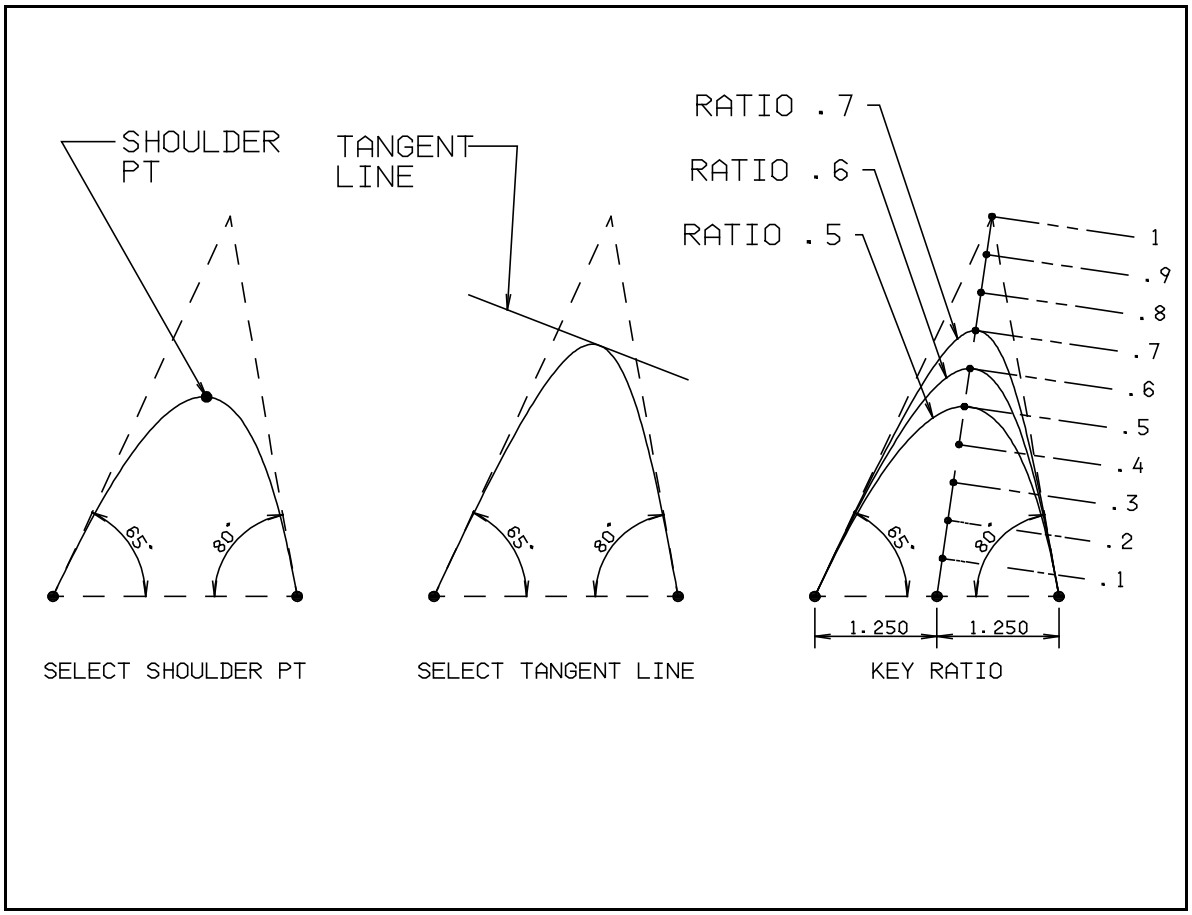

Figure 4 Examples of the three methods of defining the shoulder points of conic splines

1) **SELECTING, INDICATING OR KEYING A SHOULDER POINT:**

The left starting point of the conic is first defined by selecting an existing point. The slope of the conic at this point is then defined by keying it in, or selecting an existing line (and referencing the angle of the line). This is repeated for the right ending point. A shoulder point is then defined by selecting a point, indicating a position or keying a position. The conic must be located within the triangle formed by the conic end points and the intersection of the two lines projected through the conic end points and having the same angles as the end point vectors. If a conic is defined that would fall outside these bounds, the message ILLEGAL CONIC is displayed and the opportunity to redefine the shoulder point is given. See the "SELECT SHOULDER PT" graphic in Figure 4 on page 4.

2) **SELECTING A TANGENT LINE:**

The conic is started as mentioned in method #1 on the previous page. Instead of referencing a shoulder point, a tangent line is selected. The conic will be formed between the end points, at the keyed input and output slopes, and tangent to the selected line. As mentioned in method #1 above, the conic curve must fall within the triangle formed by the two conic end points and the point of intersection of the two lines projected through the conic end points and having the same angles as the end point vectors. See the "SELECT TANGENT LINE" graphic in Figure 4 on page 4.

3) **KEYING IN A RATIO:**

The conic is started as mentioned in method #1 on the previous page. Instead of defining a shoulder point or selecting a tangent line, a ratio is keyed in. There is an imaginary line drawn from the middle of the base (i.e. a line between the conic end points) to the intersection of the two lines projected through the conic end points and having the same angles as the end point vectors. The ratio keyed is the percentage of the distance along this imaginary line. For example a ratio of .7 would mean that the conic would reach a position 70% of the full height of the line. As mentioned in method #1 above, the conic curve must fall within the triangle formed by the two conic end points and the point of intersection of the two lines projected through the conic end points and having the same angles as the end point vectors. See the "KEY RATIO" graphic in Figure 4 on page 4.

INTRODUCTION TO LINEAR SPLINES:

Linear splines are a special type of element that can be used for breakouts (i.e. look inside an object) or for drawing charts or graphs. All segments of the linear spline are straight lines and the end of one line segment becomes the beginning of the next line segment (i.e. they are ’chained’ together). A linear spline may be created through as many as 200 points. Examples of this type of spline are shown in Figure 5 on page 14-6.

INTRODUCTION TO CONVERT:

Submenu CONVERT is used to convert an ellipse or conic to a spline. There are several reasons why you may want to do this.

If you define points on a conic, (Fkey POINT, submenu /DEF PTS/) the starting and ending points will appear. If you convert the conic to a spline and then define points again, 9 additional definition points will appear. You can also key in the angle of a vector (see Fkey ANALYZE)

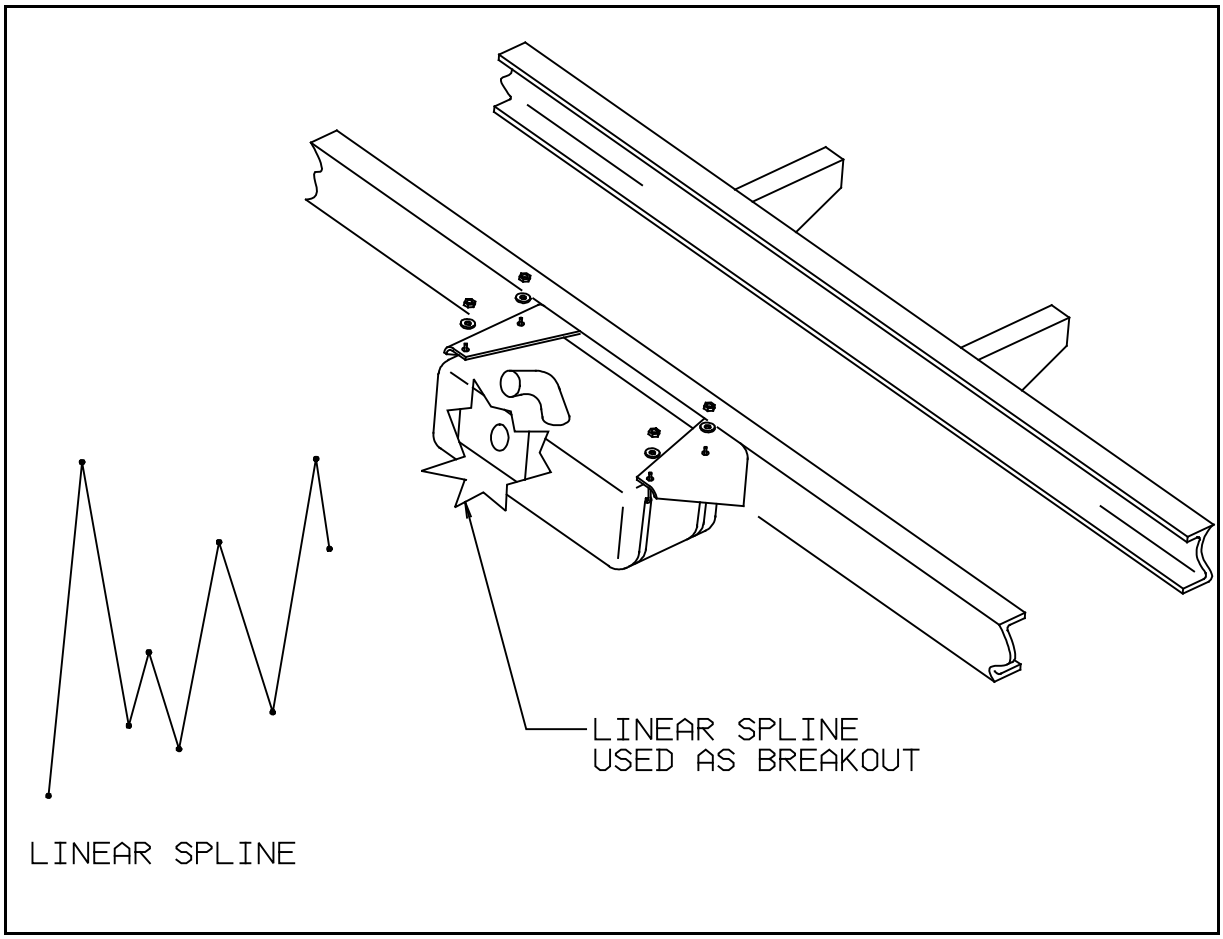

Figure 5 Examples of linear splines

and its' point of tangency with the spline will be displayed.

If you define points on an ellipse, (Fkey POINT, submenu /DEF PTS/) the center of the ellipse and the starting/ending points will be displayed. If you convert it to a spline and the define points again, an additional 11 points will be defined.

MENU ITEM TREE DESCRIPTION:

- /SPLINE/ To create smooth curves or contours representing planes cut through surfaces.

  To create a spline by defining a sequence of up to 200 points.

  To create a spline by defining the slope of the first and last points

  To create a spline using the endpoint and vector of a curved element for the starting and end points.

- /CONIC/ To create splines representing the true conic sections parabola, hyperbola and ellipse.

  To create conics by defining the endpoints, end vectors, and the shoulder point, tangent line, or conic ratio.

- /LIN SPL/ To create an element consisting of straight lines connecting a series of points.

- /CONVERT/ To convert an ellipse or conic into a spline.

  - //END/ This menu modifier signals that you are finished defining points for a spline. (Displayed only for menu options /SPLINE/ and /LIN SPL/.)

FKey SPLINE

Fkey SPLINE allows you to construct splines, conics, or linear splines or convert a conic or ellipse into a spline. Each construction has been assigned a number. The same number is also referenced on the Spline Road Map and the Action Summary. The different ways to construct these elements are divided into beginner and advanced sections and are listed with page numbers as follows:

BEGINNER: (See Figure 6 on Page 14-12 for the Beginner Road Map for Fkey SPLINE)

SPLINE NO.	DESCRIPTION	PAGE NO.
1A	A spline created through existing points, with end points relaxed	14-13
3	A linear spline created through existing points	14-14
4	An ellipse converted to a spline	14-15

ADVANCED: (See Figure 10 on Page 14-18 for the Advanced Road Map for Fkey SPLINE)

SPLINE NO.	DESCRIPTION	PAGE NO.
1B	A spline created through existing points, with starting and ending slopes locked at an angle	14-19
1C	A spline created between two existing elements, with the spline matching slopes at the endpoints of the existing elements	14-21
2A	A conic created by selecting a shoulder point	14-23
2B	A conic created by selecting a tangent line	14-25
2C	A conic created by keying a ratio	14-27

FKey SPLINE

BEGINNER

SECTION

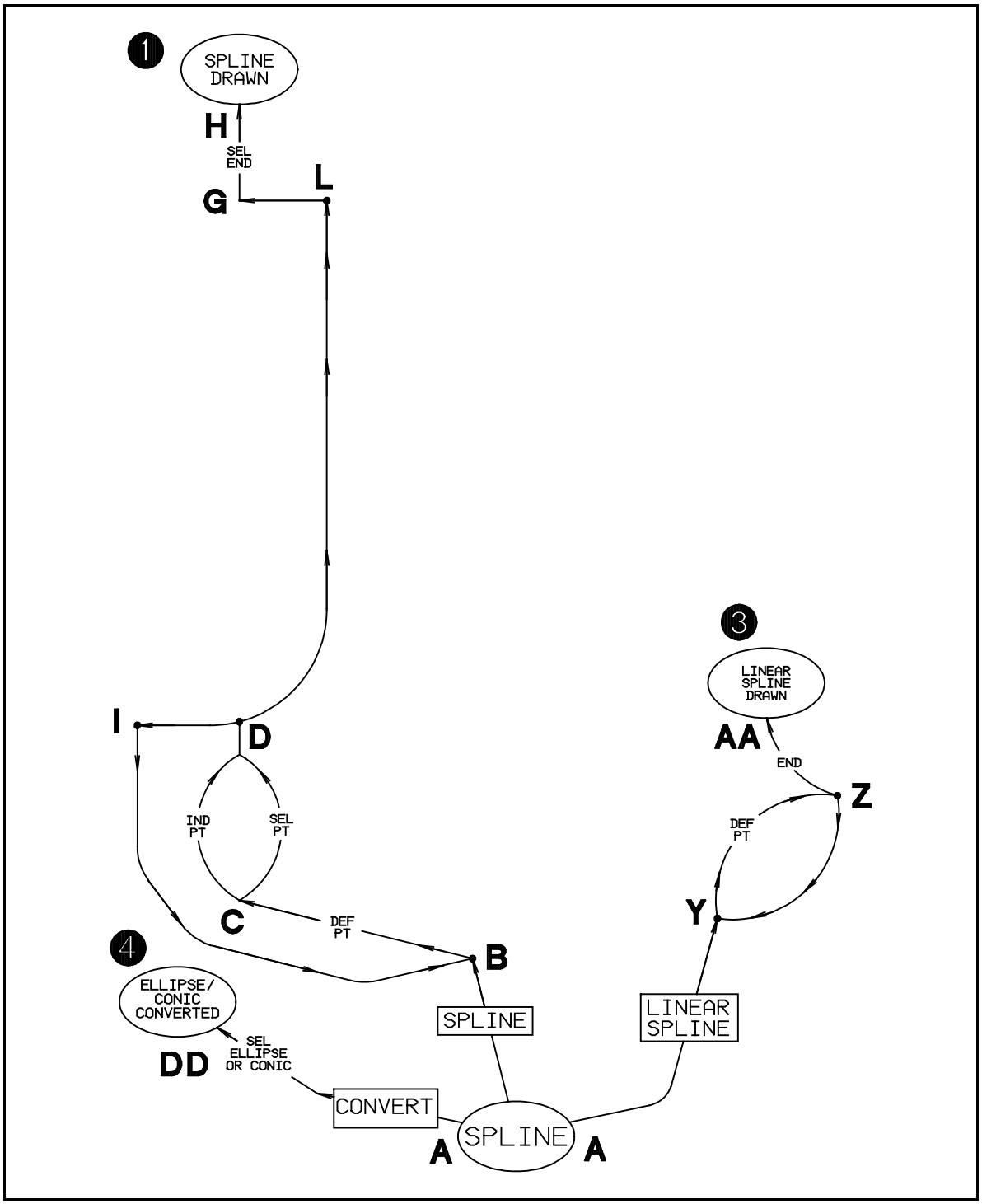

Figure 6 Beginner Road Map for SPLINE

1A) A SPLINE CREATED THROUGH EXISTING POINTS, WITH THE END POINTS RELAXED:

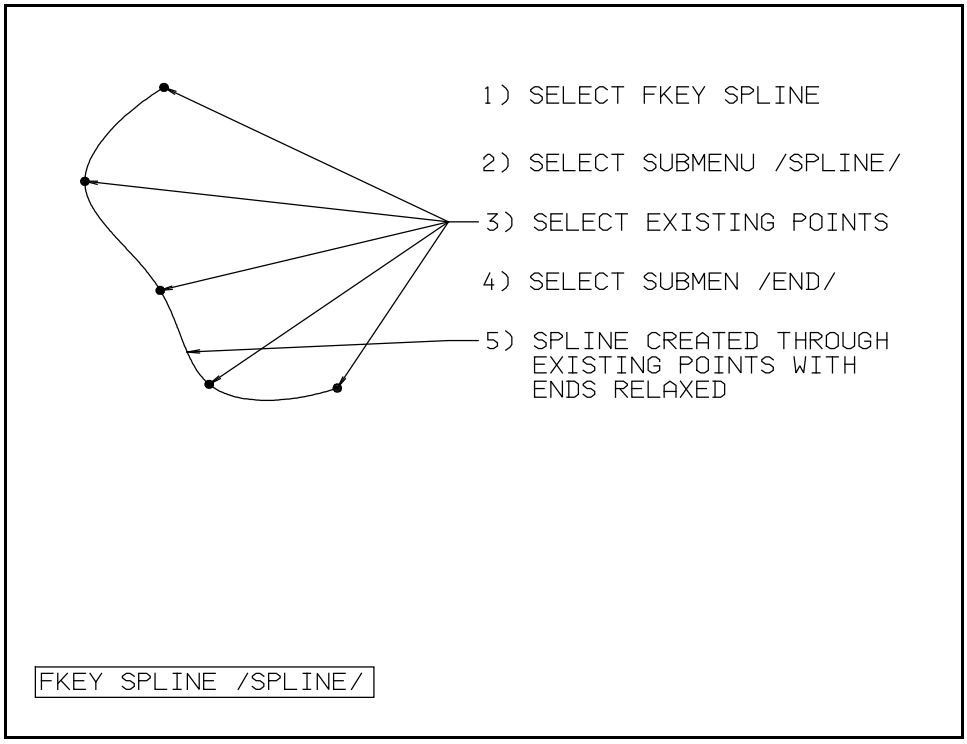

Figure 7 Example for a Spline created through existing points, with end points relaxed. (NODE PATH A,B,C,D,I,B and D,L,G,H)

To create this spline follow these steps:

STEP NO.	ACTION / RESULT	MENU PROMPT (BEFORE THE ACTION) (2nd line from top of screen)	NODE NO.
1	SELECT Fkey SPLINE		A
2	SELECT submenu /SPLINE/ (If it is not already underlined)		A
3	SELECT existing points	Def point	C
4	SELECT submenu /END/	Def slope / Def point 2 / YN erase-restore Def slope / Def point 3 / YN erase-restore ... etc	G
5	A spline is created through the existing points. The spline ends are relaxed.	Def point 1 / YN erase-restore	H

3) A LINEAR SPLINE CREATED THROUGH EXISTING POINTS:

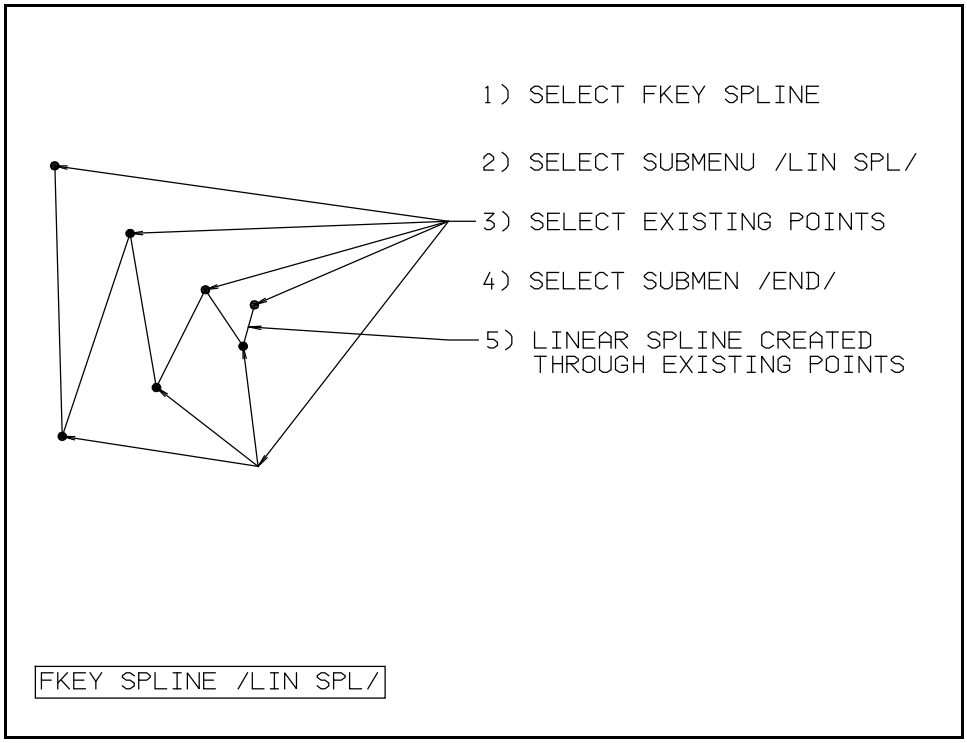

Figure 8 Example for a linear spline created through existing points. (NODE PATH A,Y,Z and Z,AA)

To create this linear spline follow these steps:

STEP NO.	ACTION / RESULT	MENU PROMPT (BEFORE THE ACTION) (2nd line from top of screen)	NODE NO.
1	SELECT Fkey SPLINE		A
2	SELECT submenu /LIN SPL/ (If it is not already underlined)		A
3	SELECT existing points	Def point 1 Def point 2 / Def angle Def point 3 / Def angle ... etc.	Y
4	SELECT submenu /END/	Def point 8 / Def angle	Z
5	A linear spline is created through the existing points.	Def point 1 / YN erase-restore	AA

4) AN ELLIPSE CONVERTED TO A SPLINE:

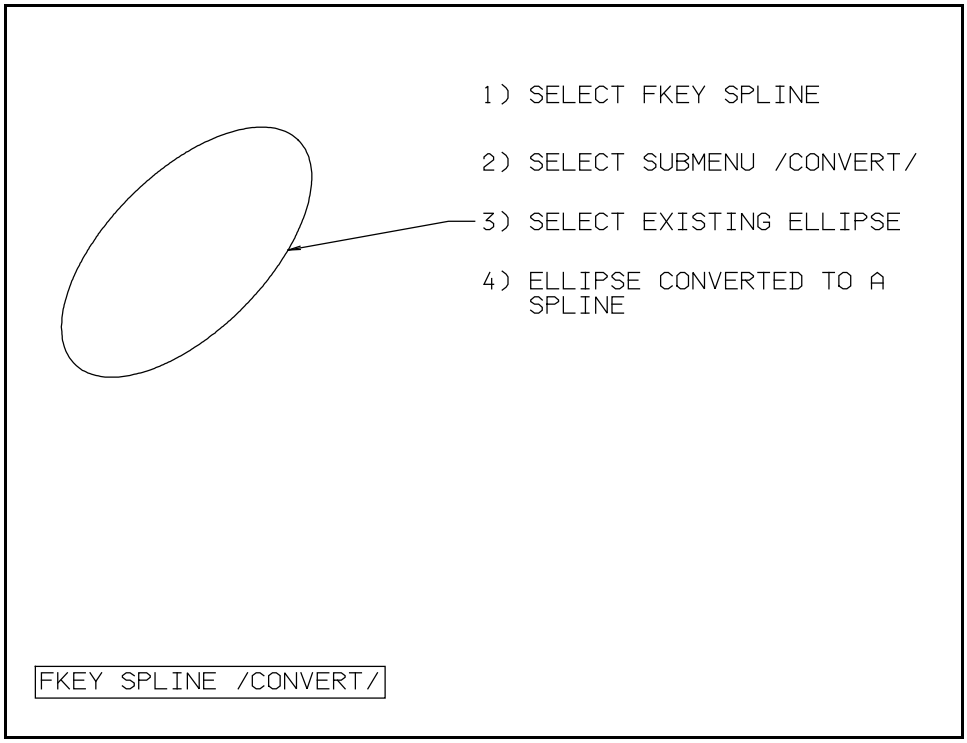

Figure 9 Example for an ellipse converted to a spline. (NODE PATH A,DD)

To create this linear spline follow these steps:

STEP NO.	ACTION / RESULT	MENU PROMPT (BEFORE THE ACTION) (2nd line from top of screen)	NODE NO.
1	SELECT Fkey SPLINE		A
2	SELECT submenu /CONVERT/ (If it is not already underlined)		A
3	SELECT existing ellipse	Sel ellipse or conic	A
4	The ellipse is converted into a spline.	Sel ellipse or conic / YN restore	DD

FKey SPLINE

ADVANCED

SECTION

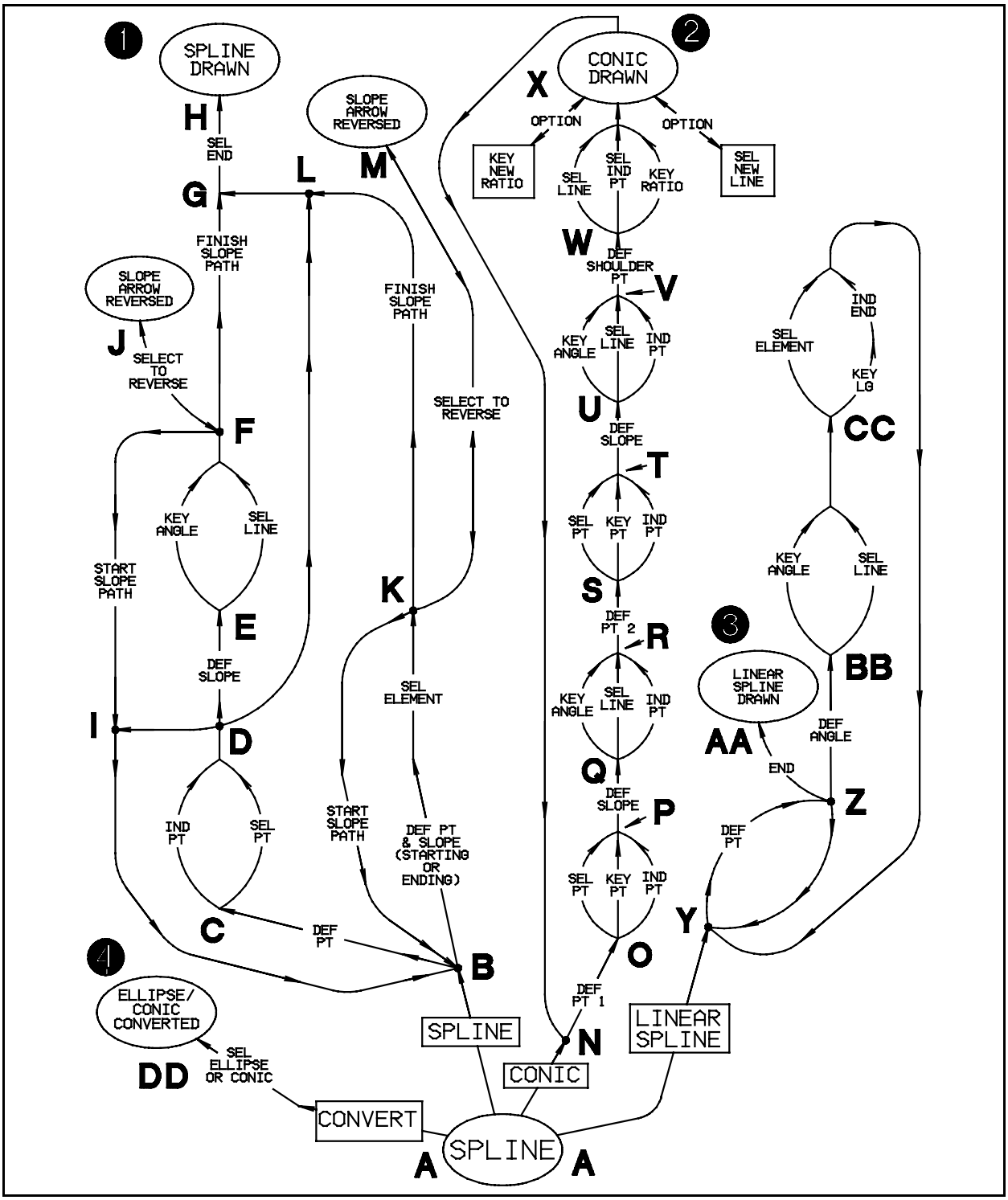

Figure 10 Advanced Road Map for SPLINE

1B) A SPLINE CREATED THROUGH EXISTING POINTS, WITH THE STARTING AND ENDING SLOPES LOCKED AT AN ANGLE:

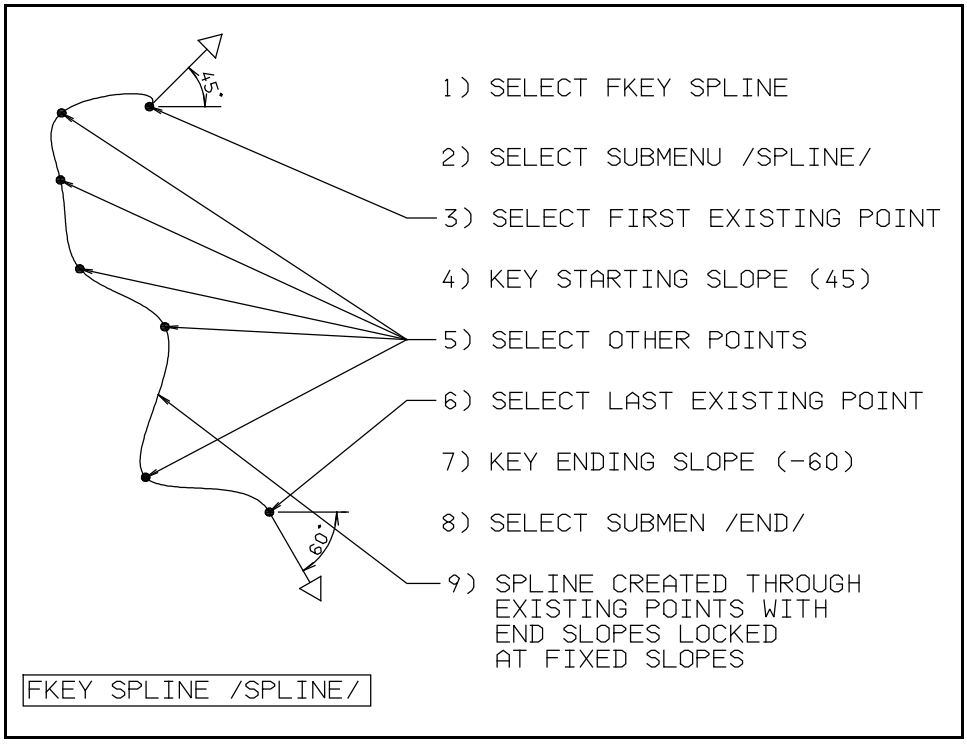

Figure 11 Ex for a Spline created through exist points, with the start and end slopes locked at an angle. (NODE PATH A,B,C,D,E,F,I,B,C,D,I, etc.. and E,F,G,H)

To create this spline follow these steps:

STEP NO.	ACTION / RESULT	MENU PROMPT (BEFORE THE ACTION) (2nd line from top of screen)	NODE NO.
1	SELECT Fkey SPLINE		A
2	SELECT submenu /SPLINE/ (If it is not already underlined)		A
3	SELECT first existing points	Def point 1	C
4	KEY starting slope (45)	Def slope / Def point 2 / YN erase-restore	E
5	SELECT other existing points	Sel to reverse / Def point 2	C
6	SELECT last existing point	Def slope / Def point 7 / YN erase-restore	C
7	KEY ending slope (-60)	Def slope / Def point 8 / YN erase-restore	E

STEP NO.	ACTION / RESULT	MENU PROMPT (BEFORE THE ACTION) (2nd line from top of screen)	NODE NO.
8	SELECT submenu /END/	Sel to reverse / Sel end	G
9	A spline is created through the existing points. The spline ends are locked at the keyed angles.	Def point 1 / YN erase-restore	H

1C) A SPLINE CREATED BETWEEN TWO EXISTING ELEMENTS, WITH THE SPLINE MATCHING SLOPES AT THE ENDPOINTS OF THE EXISTING ELEMENTS:

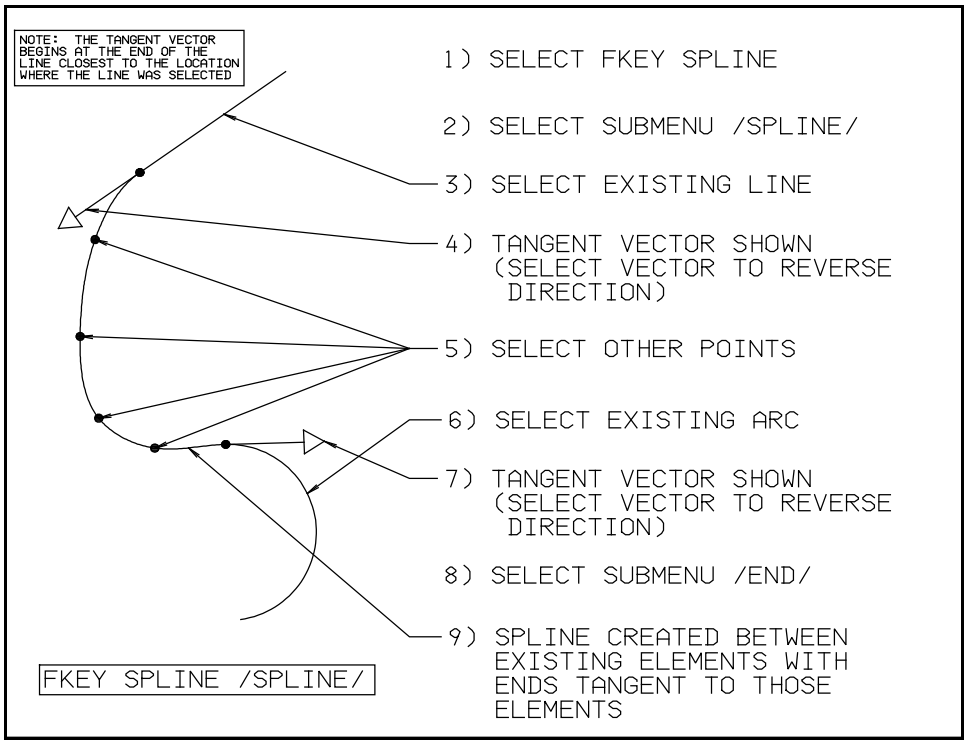

Figure 12 Ex for a spline created between exist elements, and matching the element end slopes. (NODE PATH A,B,K,B,C,D,I...etc and B,K,L,G,H)

To create this spline follow these steps:

STEP NO.	ACTION / RESULT	MENU PROMPT (BEFORE THE ACTION) (2nd line from top of screen)	NODE NO.
1	SELECT Fkey SPLINE		A
2	SELECT submenu /SPLINE/ (If it is not already underlined)		A
3	SELECT existing line	Def point 1	B
4	Tangent vector shown. Select vector to reverse direction (If necessary).	Sel to reverse / Def point 2 / ... etc.	K
5	SELECT other existing points	Def slope / Def point 3 / YN erase-restore	C

STEP NO.	ACTION / RESULT	MENU PROMPT (BEFORE THE ACTION) (2nd line from top of screen)	NODE NO.
6	SELECT existing arc.	Def slope / Def point 6 / YN erase-restore	B
7	Tangent vector shown. Select vector to reverse direction (If necessary).	Sel to reverse / Sel end	M
8	SELECT submenu /END/	Sel to reverse / Sel end	G
9	A spline is created between the line and the arc. The spline ends are tangent to the line and the arc.	Def point 1 / YN erase-restore	H

Note: The paths on the Advanced Road Map labelled 'START SLOPE PATH' and 'FINISH SLOPE PATH' are only accessed during the starting slope definition and the ending slope definition, respectively. They are not part of the Road Map except during these slope definitions.

2A) A CONIC CREATED BY SELECTING A SHOULDER POINT:

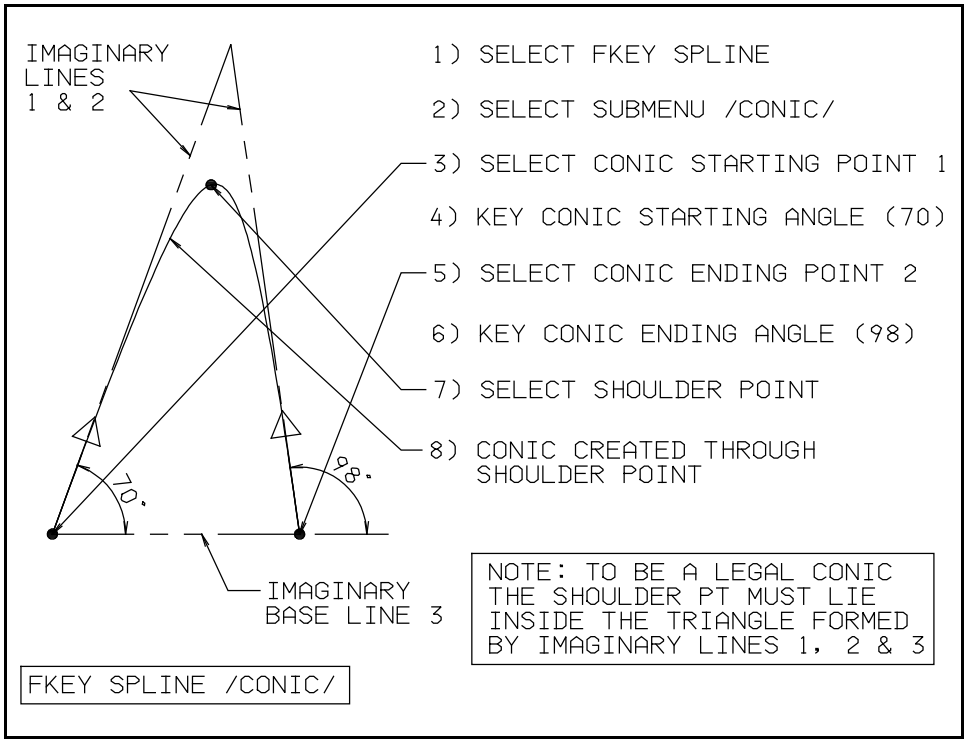

Figure 13 Example for a conic created by selecting a shoulder point. (NODE PATH A,N,O,P,Q,R,S,T,U,W,X)

To create this conic follow these steps:

STEP NO.	ACTION / RESULT	MENU PROMPT (BEFORE THE ACTION) (2nd line from top of screen)	NODE NO.
1	SELECT Fkey SPLINE		A
2	SELECT submenu /CONIC/ (If it is not already underlined)		A
3	SELECT conic starting point 1	Def point 1	O
4	KEY conic starting angle (70)	Def slope	Q
5	SELECT conic ending point 2	Def point 2	S
6	KEY conic ending angle (98)	Def slope	U
7	SELECT shoulder point	Def shoulder pt / Sel ln / Key ratio / = 0.50000	W

STEP NO.	ACTION / RESULT	MENU PROMPT (BEFORE THE ACTION) (2nd line from top of screen)	NODE NO.
8	**A conic is created through the shoulder point.**	**Def pt 1 / Sel new ln / Key new ratio / YN ers-res**	**X**

Note: The shoulder point must lie inside the triangle formed by the base line and the point of intersection of the two lines which start at the conic end points with the conic starting and ending angles. If the shoulder point lies outside of this triangle you will receive a message 'ILLEGAL CONIC'.

2B) A CONIC CREATED BY SELECTING A TANGENT LINE:

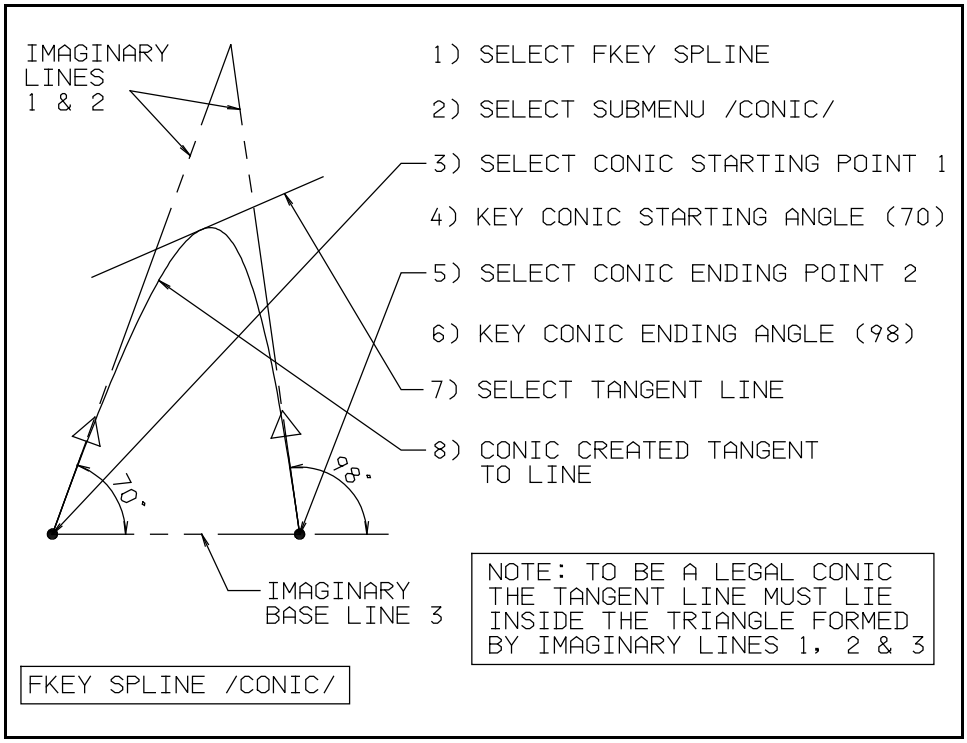

Figure 14 Example for a conic created by selecting a tangent line. (NODE PATH A,N,O,P,Q,R,S,T,U,W,X)

To create this conic follow these steps:

STEP NO.	ACTION / RESULT	MENU PROMPT (BEFORE THE ACTION) (2nd line from top of screen)	NODE NO.
1	SELECT Fkey SPLINE		A
2	SELECT submenu /CONIC/ (If it is not already underlined)		A
3	SELECT conic starting point 1	Def point 1	O
4	KEY conic starting angle (70)	Def slope	Q
5	SELECT conic ending point 2	Def point 2	S
6	KEY conic ending angle (98)	Def slope	U
7	SELECT tangent line	Def shoulder pt / Sel ln / Key ratio / = 0.50000	W

STEP NO.	ACTION / RESULT	MENU PROMPT (BEFORE THE ACTION) (2nd line from top of screen)	NODE NO.
8	**A conic is created that is tangent to the tangent line**	**Def pt 1 / Sel new ln / Key new ratio / YN ers-res**	**X**

Note: The tangent line must lie inside the triangle formed by the base line and the point of intersection of the two lines which start at the conic end points with the conic starting and ending angles. If the tangent line lies outside of this triangle you will receive a message 'ILLEGAL CONIC'.

2C) A CONIC CREATED BY KEYING A RATIO:

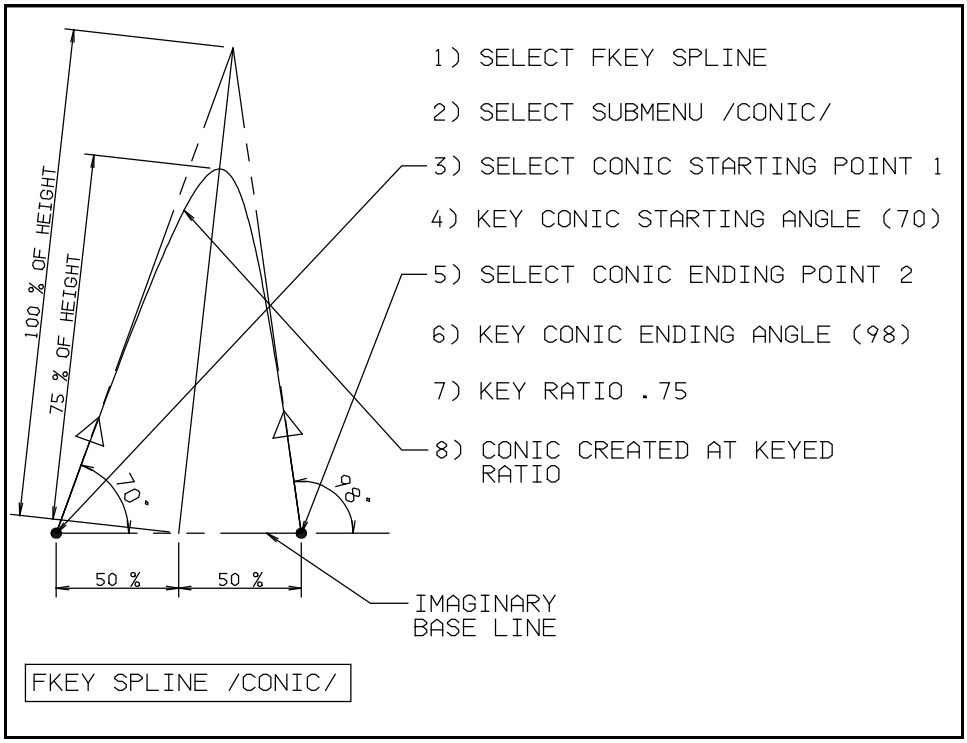

Figure 15 Example for a conic created by keying a ratio. (NODE PATH A,N,O,P,Q,R,S,T,U,W,X)

To create this conic follow these steps:

STEP NO.	ACTION / RESULT	MENU PROMPT (BEFORE THE ACTION) (2nd line from top of screen)	NODE NO.
1	SELECT Fkey SPLINE		A
2	SELECT submenu /CONIC/ (If it is not already underlined)		A
3	SELECT conic starting point 1	Def point 1	O
4	KEY conic starting angle (70)	Def slope	Q
5	SELECT conic ending point 2	Def point 2	S
6	KEY conic ending angle (98)	Def slope	U
7	KEY ratio (.75)	Def shoulder pt / Sel ln / Key ratio / = 0.50000	W
8	A conic is created at the keyed ratio	Def pt 1 / Sel new ln / Key new ratio / YN ers-res	X

All menus in Micro CADAM are intelligent. They anticipate your actions wherever possible. The results depend on the sequence that the **SELECT, INDICATE, KEY** and **Y/N** keys are pressed. This is summarized for FKey / SPLINE / and shown in chart form below:

FKEY SPLINE ACTION SUMMARY

SPLINE NO.	TO CREATE	1ST ACTION	2ND ACTION	3RD ACTION	4TH ACTION	5TH ACTION	6TH ACTION	NODEPATH
BEGINNER SECTION								
1A	A spline created through existing points, with end points relaxed	SEL Pt(s)	SEL submenu /END/					A,B,C,D,I and L,G,H
3	A linear spline created through existing points	SEL Pt(s)	SEL submenu /END/					A,Y,Z,Y and Z,AA
4	An ellipse converted to a spline	SEL ellipse						A,DD
ADVANCED SECTION								
1B	A spline created through existing points, with starting and ending slopes locked at an angle	SEL first Pt	KEY first slope	SEL other Pt(s)	SEL last Pt	KEY last slope	SEL submenu /END/	A,B,C,D,E,F, J,I,B,C,D,I,B, etc and E,F,J,G,H
1C	A spline created between two existing elements, with the spline matching the slopes at the endpoints of the existing elements	SEL line	SEL vector arrow (if necessary)	SEL other Pt(s)	SEL arc	SEL vector arrow (if necessary)	SEL submenu /END/	A,B,K,M,B,C, D,E,B,C (etc) and B,K,M,L,G,H
2A	A conic created by selecting a shoulder point	SEL start Pt 1	KEY start angle	SEL end Pt 2	KEY end angle	SEL shoulder pt		A,N,O,P,Q,R, S,T,U,V,W,X
2B	A conic created by selecting a tangent line	SEL start Pt 1	KEY start angle	SEL end Pt 2	KEY end angle	SEL tangent line		A,N,O,P,Q,R, S,T,U,V,W,X
2C	A conic created by keying a ratio	SEL start Pt 1	KEY start angle	SEL end Pt 2	KEY end angle	KEY ratio		A,N,O,P,Q,R, S,T,U,V,W,X

CHAPTER 15

FKey RELIMIT

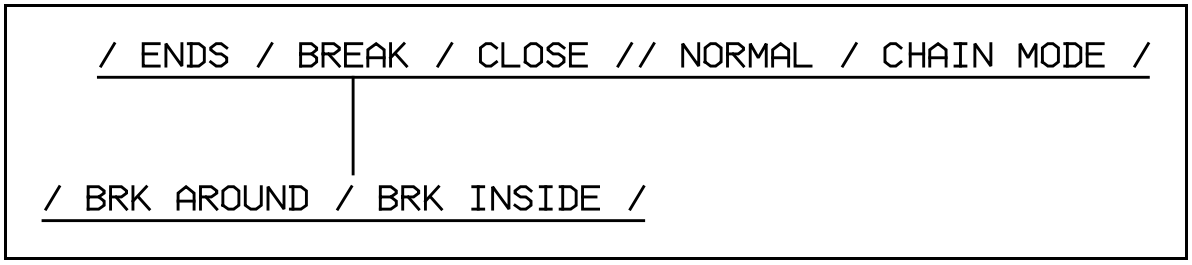

Figure 1 - Menu Item Tree for FKey RELIMIT

FKey RELIMIT allows you to modify existing geometry.

Lines can be either shortened or lengthened and can be relimited to any length. A single line may be broken into two (or more) lines with the submenu option / BREAK /. Lines may be forced to BREAK AROUND or BREAK INSIDE circles, dittos or symbols.

Circles may also be relimited. A circle is considered to start at 0 degrees and run in a CCW (counter clockwise) direction. A circle may also be broken into two arcs by using subMenu / BREAK /.

The RELIMIT process works two different ways:

1. Select the element to be relimited and then select the element it will be relimited to.

2. Select the element to be relimited and then indicate, re-indicate, etc. the end of the line (or circle). In this situation subMenu / ENDS / must be selected to end the process. Because the program does not know how many times you are going to press the INDICATE button on the mouse to reposition the end of the line, you must tell it you are finished by selecting subMenu / END / (or SELECTING) subMenu RELIMIT again.

There are three variations of FKey RELIMIT:

- NORMAL RELIMIT
- CHAIN RELIMIT
- GROUP RELIMIT

Normal relimit applies to single lines and you would use it to relimit perhaps 1-6 lines at a time, either to the same intersecting line or to all different intersecting lines.

Chain relimit applies to multiple lines relimited to the same selected line. After the first line is relimited to a selected line, select submenu option /CHAIN/. Each line selected will now be relimited to the intersecting line. It is not necessary to select an intersecting line each time.

Group relimit is very powerful and allows you to relimit thousands of lines at a time to an intersecting line. It is necessary to form a temporary group first (see FKey GROUP) before accessing FKey RELIMIT. The /GROUP/ option will then appear for selection on the submenu.

HINT: You cannot relimit a line to a length of zero. You must erase the line instead (FKey SHOW).

When relimiting lines, the half of the line that is selected is the half that initially shortens. See Figure 2 on page 15-3 for an example of this.

If you relimit a line to another selected line you may use the Y/N button on the mouse to flip the orientation of the line. See Figure 3 on page 15-3 for an example of this.

When relimiting circles, remember that a circle is considered a line that is curved and starts and finishes at 0 degrees. Everything that applies to relimiting lines also applies to relimiting circles ... just remember that the circle starts and finishes at 0 degrees. See Figure 4 on page 15-4 and Figure 5 on page 15-4 for examples of relimiting a circle.

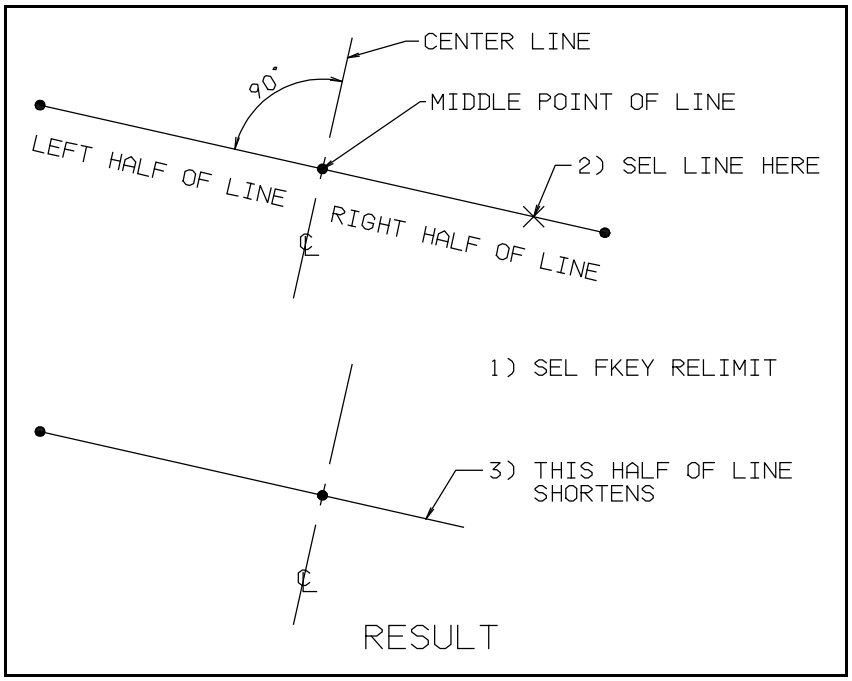

Figure 2 Example showing relimiting of lines

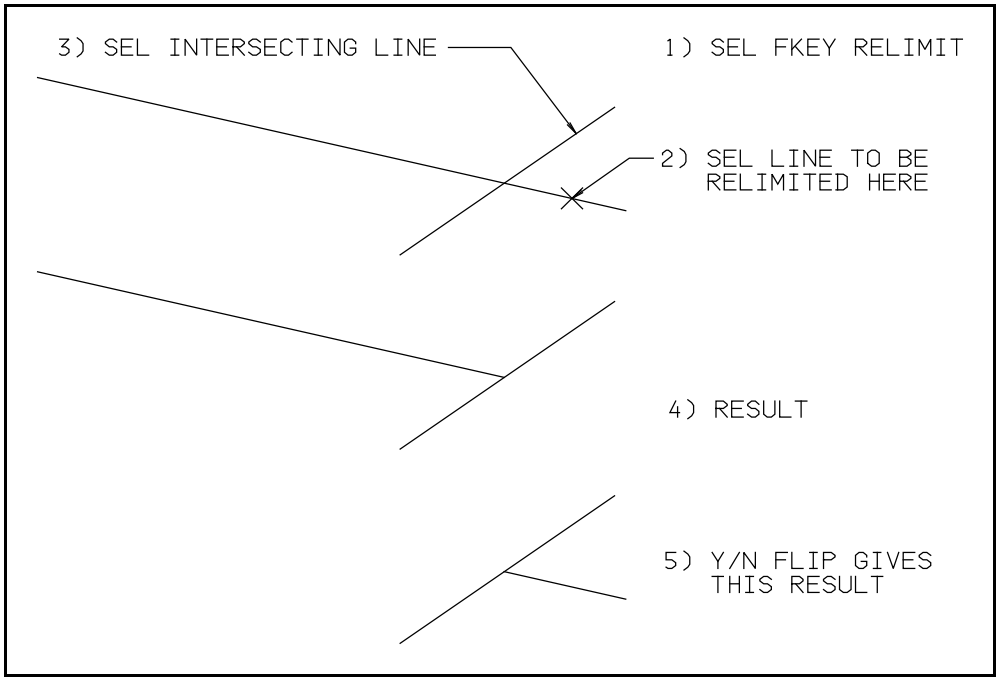

Figure 3 Example showing relimit and Y/N Flip *(Node Path A,B,C,E,G,H)*

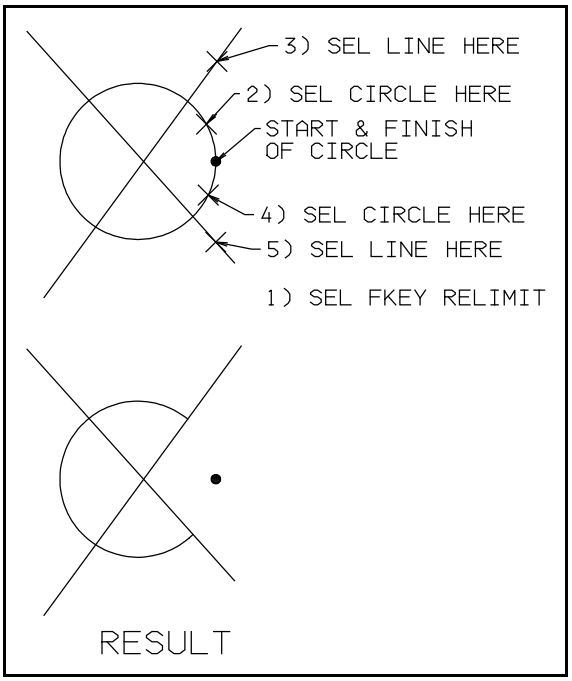

Figure 4 Example showing relimiting of circle

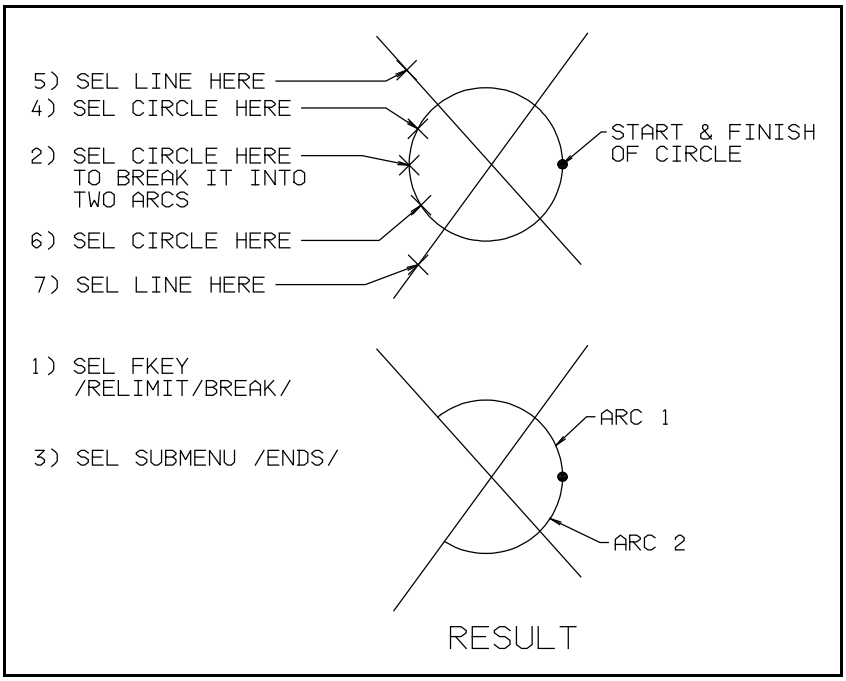

Figure 5 Example of relimiting a circle

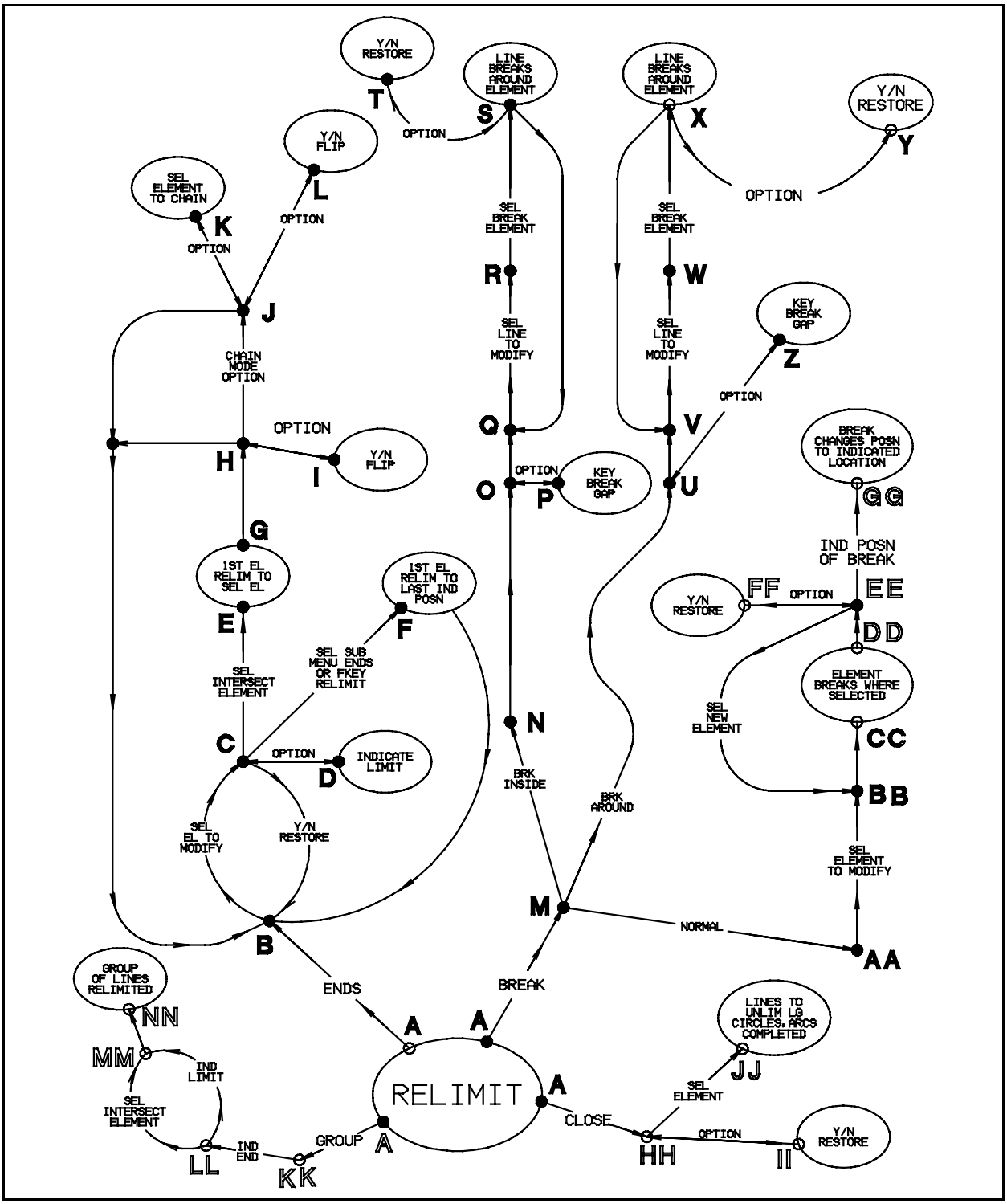

Figure 6 Road Map for Relimit

FKey RELIMIT

SUBMENU /ENDS/

SUBMENU //NORMAL/, /CHAIN MODE/

FKey RELIMIT and Submenu /ENDS/:

Refer to Figure 6 on page 15-5 for the Road Map with NODE references for FKey RELIMIT.

A) TO RELIMIT ELEMENTS BY SELECTING INTERSECTING ELEMENTS, FOLLOW THESE STEPS:

1. SELECT FKey RELIMIT and submenu /ENDS/ (NODE A). The menu prompt ***Sel element to modify*** appears near the top of the display screen.

2. SELECT the line, circle or arc that you want to relimit (NODE B). The selected element highlights (i.e. turns green) and the element shortens where it was selected. The menu prompt ***Sel intersecting element / Ind limit...YN restore*** appears.

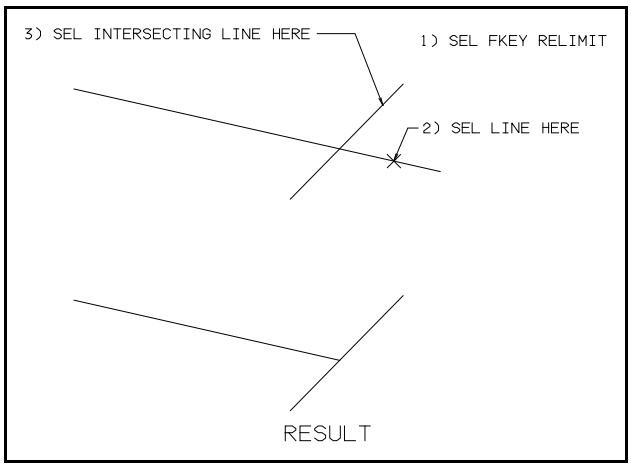

Figure 7 Example of relimited lines *(NODE PATH A,B,C,E,G,H)*

3. **OPTION:** Press the YN button on the mouse and the line will be restored to its original length (NODE C). This effectively aborts the relimit operation.

4. SELECT the intersecting element (NODE C), (i.e..a line, circle or arc) and the first element selected will be relimited to this intersecting element. The menu prompt ***Sel element to modify...YN flip*** appears.

5. **OPTION : Y/N FLIP :** ***(Node H)***

   Normally whichever half of the line you initially select becomes the half that shortens (to signify the start of the relimit process). By intentionally selecting one half of the line or the other you are able to shorten or lengthen the end of the line you want. Sometimes however, it is easier to SELECT the wrong end of the line (i.e. the proper end may be too hard to select, or it may be too congested in that area) and use the Y/N button on the mouse to 'FLIP' the relimited end of the line. This is very powerful...give it a try. You may also use this feature when you inadvertently select the wrong end of the line. See Figure 3 on page 15-3 for an example of Y/N FLIP.

6. The relimit operation is finished.

B) TO RELIMIT ELEMENTS BY INDICATING THEIR END POSITION, FOLLOW THESE STEPS:

1. **SELECT FKey RELIMIT and submenu /ENDS/** (NODE A). the menu prompt ***Sel element to modify*** appears near the top of the display screen.

2. **SELECT the line, circle or arc that you want to relimit** (NODE B): The selected element highlights (i.e. turns green) and the element shortens where it was selected. The menu prompt ***Sel intersecting element / Ind limit...YN restore*** appears.

3. **OPTION** (NODE C): Press the YN button on the mouse and the line will be restored to its original length. This effectively aborts the relimit operation.

4. **INDICATE Limit** (Node C): Indicate the approximate end of the line. If you are not satisfied keep relimiting until the line (or circle) end is where you want it. Continue indicating the new position of the end of the element. Each time you indicate, the element will be relimited to the new position.

5. **SELECT submenu ends or FKey RELIMIT** (NODE A): Because the program does not know how many times you are going to press the INDICATE button on the mouse, you must tell it when you are finished. You do this by SELECTING submenu /ENDS/ or SELECTING FKey RELIMIT to finish this session of relimiting and reset the menu.

6. **HINT:** You can also finish this type of relimiting operation by selecting the same line you are relimiting. After selecting the line the error message ***Impossible geometry*** will appear (i.e. you cannot relimit a line to itself) and the relimiting operation is finished. This is a "trick" that allows you to finish the relimiting operation without selecting the bottom submenu.

7. The relimit operation is finished.

C) TO RELIMIT ELEMENTS USING THE CHAIN MODE, FOLLOW THESE STEPS:

There are situations where you want to relimit multiple lines back to an intersecting line. To speed up this process you may use the CHAIN MODE option. Once you have relimited the first line normally, you may SELECT the /CHAIN MODE/ option on the submenu and then just SELECT each of the other lines that you want to relimit to the intersecting line. You do not have to reselect the intersecting line again....this is very fast and powerful.

1. **SELECT FKey RELIMIT and submenu /ENDS/** (NODE A): The menu prompt ***Sel element to modify*** appears near the top of the display screen.

2. **SELECT the line, circle or arc that you want to relimit** (NODE B). The selected element highlights (i.e. turns green) and the element shortens where it was selected. The menu prompt ***Sel intersecting element / Ind limit...YN restore*** appears.

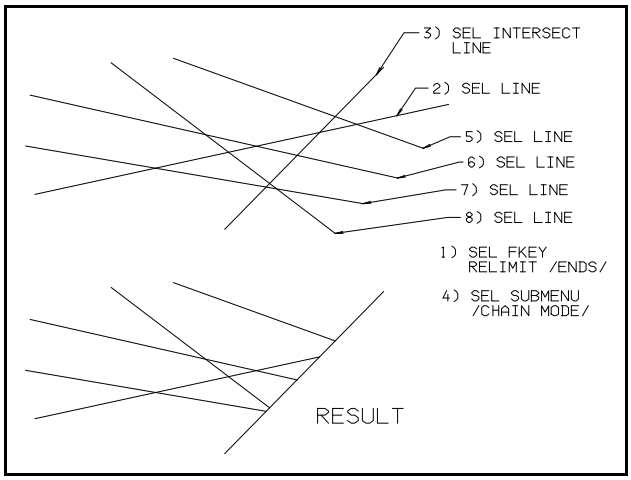

Figure 8 Example of Chain Mode *(Node Path A,B,C,E,G,H,J,K)*

3. **OPTION** (NODE C): Press the YN button on the mouse and the line will be restored to its original length. This effectively aborts the relimit operation.

4. **SELECT the intersecting element** (i.e..a line, circle or arc) (NODE C): The first element selected will be relimited to this intersecting element. The menu prompt ***Sel element to modify...YN flip*** appears.

5. **OPTION : Y/N FLIP** : (Node H)

   Normally whichever half of the line you initially select becomes the half that shortens (to signify the start of the relimit process). By intentionally selecting one half of the line or the other you are able to shorten or lengthen the end of the line you want. Sometimes however, it is easier to SELECT the wrong end of the line (i.e. the proper end may be too hard to select, or it may be too congested in that area) and use the Y/N button on the mouse to 'FLIP' the relimited end of the line. This is very powerful...give it a try. You may also use this feature when you inadvertently select the wrong end of the line. See Figure 3 on page 15-3 for an example of Y/N FLIP.

6. **SELECT submenu /CHAIN/** (NODE H): The menu prompt ***Sel element to chain...YN flip*** appears.

7. **SELECT element to chain** (NODE J): SELECT another element (line, circle or arc) and that element will be relimited to the selected intersecting element. Keep SELECTING elements and they will all be relimited back to the intersecting element. Use Y/N flip if necessary.

8. Continue selecting elements and they will be relimited to the intersecting element selected in step #4. To finish the relimit operation perform a different action.

D) TO RELIMIT ELEMENTS USING THE GROUP MODE OPTION, FOLLOW THESE STEPS:

The group mode submenu option becomes available if you have a temporary group formed. A summary of the steps necessary to create this temporary group follows (See the Chapter on Fkey GROUP for detailed information on forming a temporary group):

FORM A TEMPORARY GROUP OF LINES TO BE RELIMITED:

1. **SELECT FKey GROUP and submenu /TRAP/**. The menu prompt ***Sel point / Ind point / YN rectangle*** appears.

2. **INDICATE above the group of lines you are going to relimit**. The menu prompt ***Sel point / Ind point / YN backup*** appears.

3. **INDICATE below the group of lines you are going to relimit**. A trap line is now created. This trap line cuts through the group of lines that you are going to relimit. The menu prompt remains ***Sel point / Ind point / YN backup***.

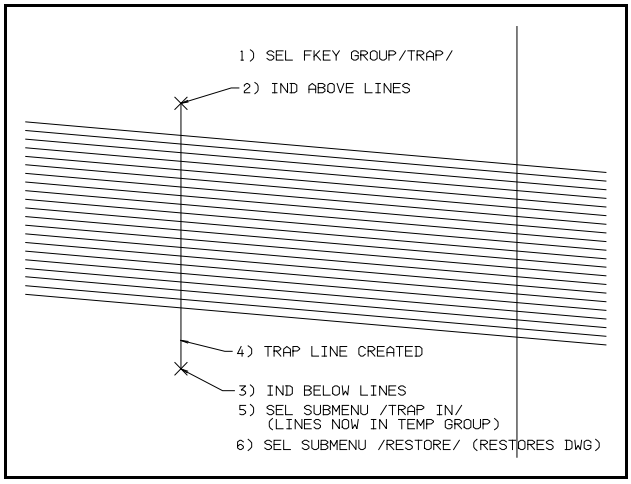

Figure 9 Example of creating a Temporary Group

4. **SELECT submenu /TRAPIN/ to trap those lines that were cut into a temporary group**. You are shown all elements in the temporary group. The menu prompt remains

Sel point / Ind point / YN backup.

5. **SELECT /RESTORE/ to restore the drawing**. The complete drawing is displayed again.

PERFORM THE GROUP RELIMIT:

6. **SELECT FKey RELIMIT and continue with the relimit**. Because you now have a temporary group, the submenu item /GROUP MODE/ now becomes available.

7. **SELECT submenu /GROUP MODE/** (NODE A). The menu prompt ***Ind end*** appears.

8. **INDICATE END** (NODE HH): Indicate one half of the group of lines. (i.e. either the left or right half, or the top or bottom half). The menu prompt ***Sel intersecting element / Ind limit*** appears.

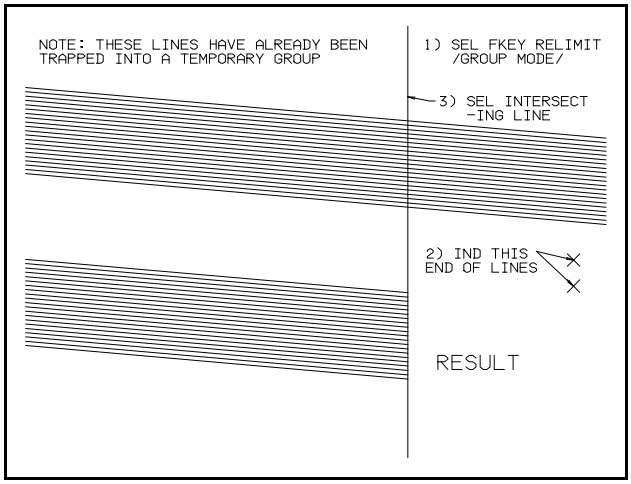

Figure 10 Example of Group Relimit

9. **SELECT THE INTERSECTING ELEMENT** (NODE II): Select an intersecting line and the entire group of lines is relimited to the selected line (NODE JJ). The temporary group is now disbanded.

10. **OPTION: INDICATE LIMIT** (NODE II): Indicate a position on the screen (i.e. move the cursor to a location on the screen and press the indicate button on the mouse) that you want the group of lines relimited to. The group of lines is now relimited to the indicated position (NODE KK) and the temporary group is disbanded.

11. The group relimit is finished.

FKey RELIMIT

SUBMENU /BREAK/, /CLOSE/

E) TO BREAK A SINGLE ELEMENT INTO TWO ELEMENTS, FOLLOW THESE STEPS:

Submenu BREAK allows you to 'break' one element into two elements. For example a line when SELECTED with the /BREAK/ option underlined will break at the position selected and break into two separate lines.

/BREAK/ /NORMAL/: This option will break a single line into two separate lines.

1. **SELECT FKey RELIMIT and submenu /BREAK/** (NODE A): Select the element you want to break into two separate elements. The menu prompt **...** appears.

2. **SELECT ELEMENT TO MODIFY** (NODE AA): Select the element you want to break. The element breaks where it is selected.The menu prompt **...**

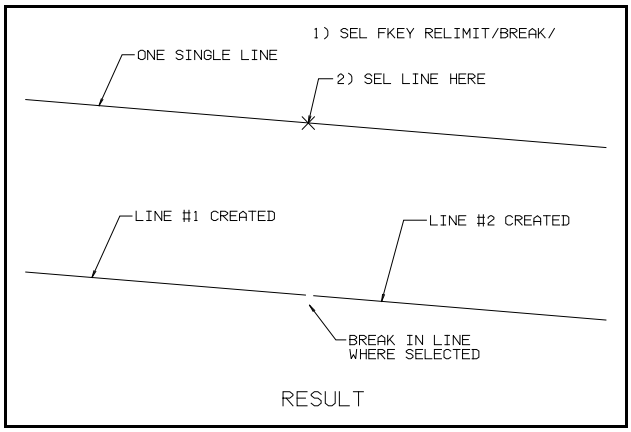

Figure 11 Example of Relimit /BREAK/NORMAL/
(Node Path A,M,AA,BB,CC)

3. **OPTION: YN RESTORE** (NODE EE): Press the YN button on the mouse and the two separate elements are recombined back into a single element.

4. **OPTION: INDICATE POSITION OF BREAK** (NODE EE): Indicate the position where you want the break to be located, and it will change to the indicated position.

5. **SELECT A NEW ELEMENT TO MODIFY** (NODE EE): Select a new element and the break procedure will repeat.

F) TO BREAK AROUND AN ELEMENT, FOLLOW THESE STEPS:

When the FKey RELIMIT submenu /BREAK/ /BRK AROUND/ option is underlined (i.e. active) then the selected line (or circle, etc.) can be broken around another element (ditto, symbol or circle).

/BREAK/ /BRK AROUND/: This menu option allows you to break a line around a circle, ditto or symbol. The single line is broken into two lines with the circle, ditto or symbol in the middle.

1. **SELECT FKey RELIMIT and submenu /BREAK/ and /BREAK AROUND/** (NODE M): Select the element you want to break into two separate elements. The menu prompt ***Sel line to modify...Key break gap*** appears.

2. **OPTION: KEY BREAK GAP** (NODE U). The break gap defaults to 0. If you want a different gap, key it in (i.e. type the number on the keyboard and press the Enter Key).

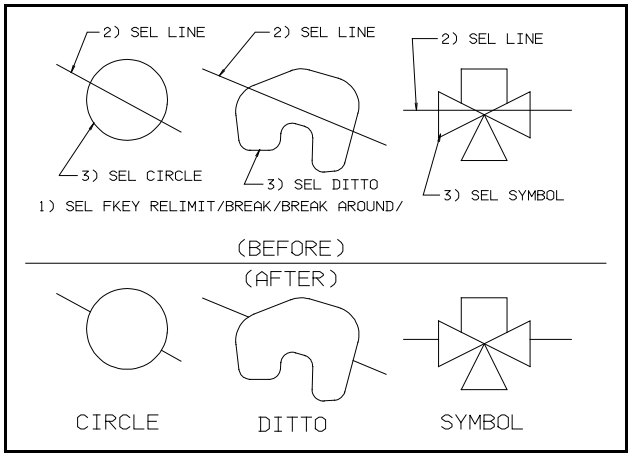

Figure 12 Example of Relimit /BREAK/NORMAL/ *(Node Path A,M,AA,BB,CC)*

3. **SELECT LINE TO MODIFY** (NODE V): Select the element you want to break. The menu prompt ***Sel break element*** appears.

4. **SELECT BREAK ELEMENT** (NODE W): SELECT a ditto, symbol, circle (or another line) that the selected line will break around. The line now breaks around the break element. *(Node X)*. The menu prompt ***Sel line to modify...YN restore*** appears. NOTE: Should you select another line as the element to break around, the line to be modified will change *from* one line *to* two lines (either side of the break element). This is useful if part of your object if visible (solid lines) and part is hidden (dashed lines).

5. **OPTION: YN RESTORE** (NODE X): Should you want to cancel the break around, press the Y/N button on the mouse. The break around will be removed and the line will return to a single line.

6. The break around is finished.

G) TO BREAK INSIDE AN ELEMENT, FOLLOW THESE STEPS:

When the FKey RELIMIT submenu /BREAK/ /BRK INSIDE/ option is underlined (i.e. active) then the selected line (or circle, etc.) can be broken inside another element (ditto, symbol or circle).

/BREAK/ /BRK INSIDE/: This menu option allows you to break a line inside a circle, ditto or symbol. The single line is relimited inside the boundaries of a circle, ditto or symbol.

1. **SELECT FKey RELIMIT and submenu /BREAK/ and /BREAK INSIDE/** (NODE M): Select the element you want to break into two separate elements. The menu prompt ***Sel line to modify...Key break gap*** appears.

2. **OPTION: KEY BREAK GAP** (NODE O). The break gap defaults to 0. If you want a different gap, key it in (i.e. type the number on the keyboard and press the Enter Key).

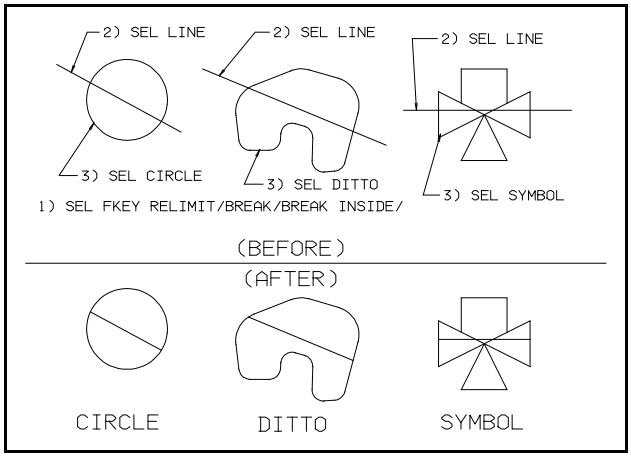

Figure 13 Example of Relimit /BREAK/NORMAL/ *(Node Path A,M,AA,BB,CC)*

3. **SELECT LINE TO MODIFY** (NODE Q): Select the element you want to break. The menu prompt ***Sel break element*** appears.

4. **SELECT BREAK ELEMENT** (NODE W): SELECT a ditto, symbol or circle that the selected line will break inside. The line now breaks inside the break element. (NODE R). The menu prompt ***Sel line to modify...YN restore*** appears.

5. **OPTION: YN RESTORE** (NODE S): Should you want to cancel the break inside press the Y/N button on the mouse. The break inside will be removed and the line will return to a single line.

6. The break inside is finished.

H) TO CLOSE AN ELEMENT, FOLLOW THESE STEPS:

FKey RELIMIT /CLOSE/: Close geometry allows you to do the following:

- Change a fixed length line to an unlimited length line
- Change an arc into a circle

1. **SELECT FKey RELIMIT and submenu /CLOSE/** (NODE A): The menu prompt ***Sel element to modify*** appears.

2. **SELECT ELEMENT** (NODE HH): SELECT a fixed length line and it will be changed to an unlimited length line (i.e. 20,000 units in length). SELECT an arc and it will be changed into a circle. (NODE NN) The menu prompt ***Sel line to modify...YN restore*** appears.

3. The CLOSE operation is finished.

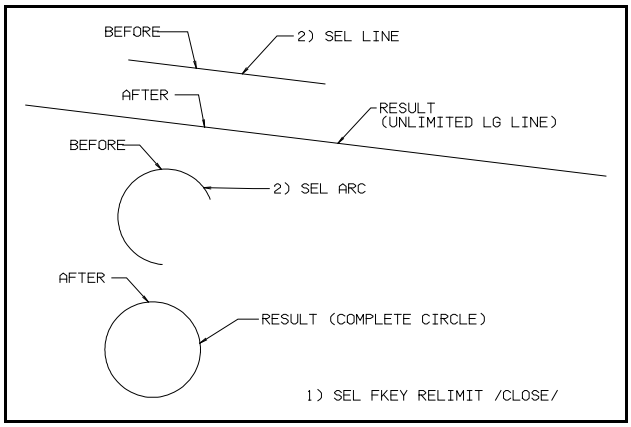

Figure 14 Example of Relimit /BREAK/NORMAL/ *(Node Path A,M,AA,BB,CC)*

FKEY / RELIMIT / ACTION SUMMARY

ITEM	TO CREATE	1ST ACTION	2ND ACTION	3RD ACTION	4TH ACTION	NODEPATH
1	Relimit Line End	SEL Line	SEL Intersect Element			A,B,C,E
2	Relimit Line Ends (Chain Option)	SEL Line	SEL Intersect Element	SEL Chain Mode Option	Sel Element to Chain	A,B,C,E,G,H,J,K
3	Relimit Line Ends (Group Option) - Note: Temporary Group has been previously formed	SEL /GROUP MODE/ Option	IND End			A,KK,LL,MM,NN
4	Break a Line: /BREAK/NORMAL/	SEL submenu /BREAK NORMAL/ Option	SEL Line			A,M,AA,BB,CC
5	Break around an object: /BREAK/AROUND/	SEL submenu /BREAK AROUND/ Option	SEL Line	SEL Break Element		A,M,U,V,W,X
6	Break inside an object: /BREAK/INSIDE/	SEL submenu /BREAK INSIDE/ Option	SEL Line	SEL Break Element		A,M,N,O,Q,R,S
7	Close an Element	SEL submenu /CLOSE/	SEL Line			A,HH,JJ

CHAPTER 16

FKey CORNER

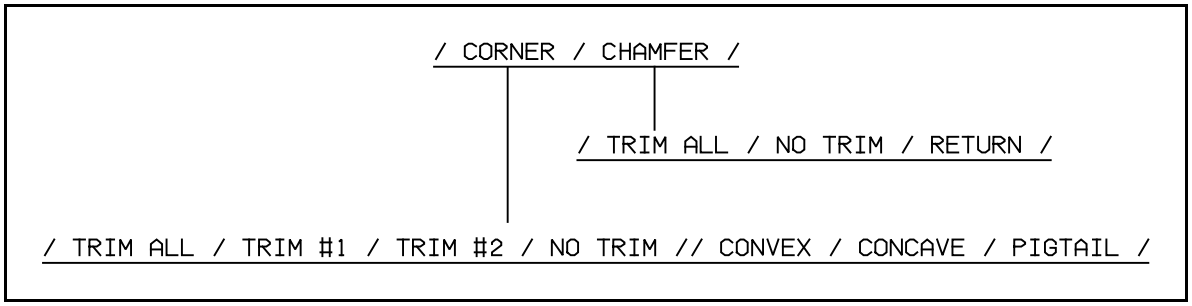

Figure 1 - Menu Item Tree for FKey CORNER

Fkey CORNER is used for editing geometry.

Intersecting elements (i.e. lines, circles, splines, etc.) can be ’cornered’ such that one of the four possible corners is kept. All corners can be blended with a radius. The default radius is ’0’ which gives a sharp corner.

Elements do not have to intersect to be cornered. The elements are automatically relimited to suit the desired corner.

For parallel elements (parallel lines or concentric circles) a slot can be constructed.

Elements can be chamfered as well as being cornered. This is a common practice (i.e. ’chamfer 1/16 x 45 deg’) in mechanical drawings.

Refer to Figure 2 on page 16 - 4 to see the Road Map for FKey CORNER /CORNER/.

FUNCTION KEY CORNER SUBMENU OPTIONS:

- /CORNER/ Creates an angular or rounded corner from intersecting lines, or where two lines would intersect if extended

  Creates rounded or angular corners at the intersection of two elements.

  Creates a slot using two parallel lines.

  - /TRIM ALL/ Trims the excess from both intersecting elements when the corner is created.
  - /TRIM #1/ Trims only the first selected element.
  - /TRIM #2/ Trims only the second selected intersecting element.
  - /NO TRIM/ Trims none of the intersecting elements when the corner is created.
  - /CONVEX/ Creates a convex corner.
  - /CONCAVE/ Creates a concave corner.
  - /PIGTAIL/ Creates a pigtail corner.

- /CHAMFER/ Creates a chamfer at the intersection of two lines, or where two lines would intersect if extended.

  - /TRIM ALL/ Trims the excess from both intersecting elements when the corner is created.
  - /NO TRIM/ Trims none of the intersecting elements when the corner is created.

FKey CORNER

SUBMENU /CORNER/

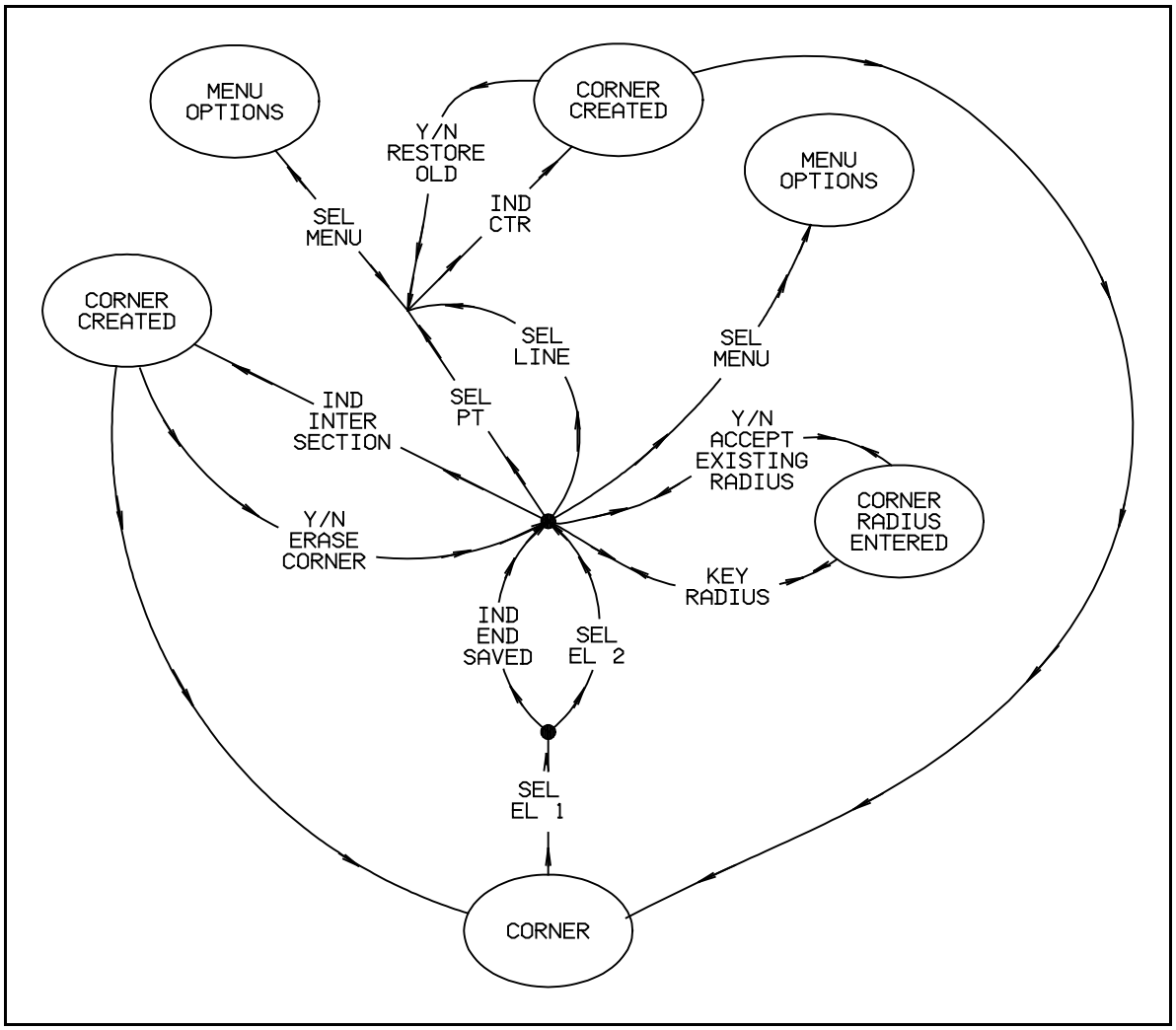

Figure 2 Road Map for FKey CORNER / CORNER /

SUBMENU /CORNER/:

Refer to Figure 3 on page 16-5 for examples of sharp corners.
Refer to Figure 4 on page 16-6 for examples of radius corners.

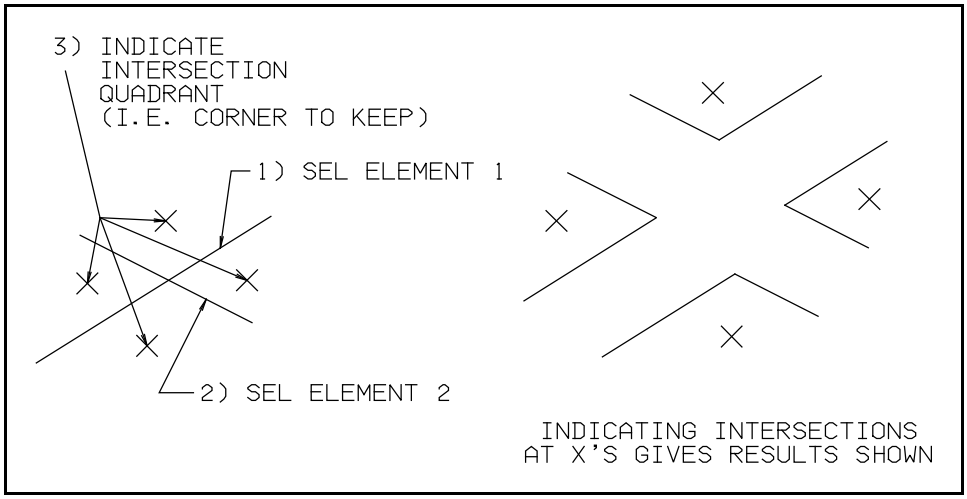

Figure 3 Examples of sharp corner construction

A) TO CORNER TWO ELEMENTS:

1. SELECT FKey CORNER and submenu /CORNER/. The menu prompt ***Sel element 1*** appears.

2. SELECT the first element. The menu prompt ***Ind end saved / Sel element 2*** appears.

3. **OPTION:** INDICATE End Saved:

   Indicate which 1/2 of the element you want saved (i.e. not relimited during the corner process. The menu prompt ***Sel element 2*** appears.

4. SELECT the second element. The menu prompt ***Ind intersect / Sel pt, ln or menu / Key rad = 0.0000*** appears.

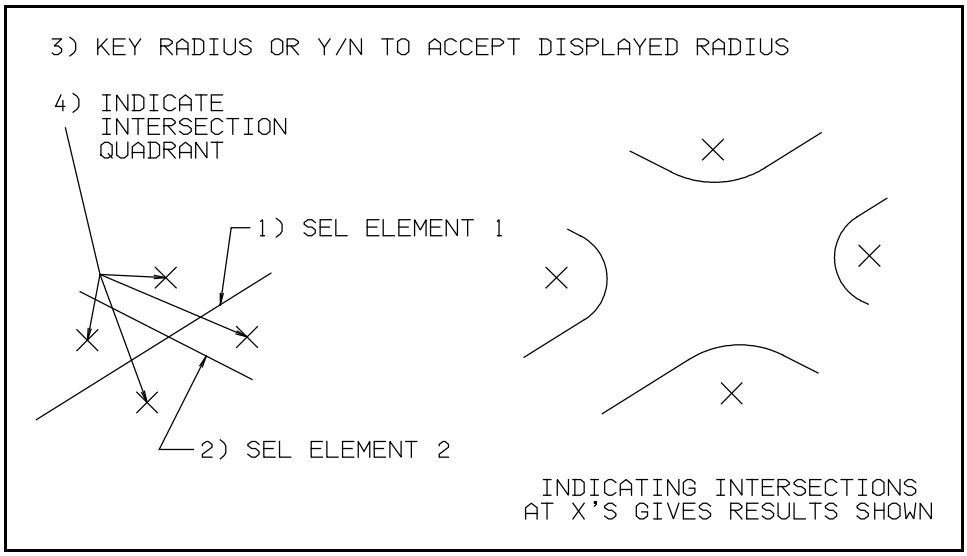

Figure 4 Example of corner with a radius

5. **OPTION:** ENTER the corner radius:

KEY the corner radius required, or press the Y/N button on the mouse to accept a corner radius already displayed. This radius will be the radius which is blended into the two elements in the corner. The menu prompt ***Ind intersect / Sel pt, ln or menu / Key rad = 0.0000*** appears.

6. **OPTION: SELECT Submenu Options:**

The following Sub Menu options allow you to adjust exactly how the cornered elements will trim, and whether they will be convex, concave or pigtail. These submenu options are shown in Figure 5 on page 16 - 8.

a. **TRIM ALL:**

Both elements #1 and #2 are trimmed during the corner.

b. **TRIM #1:**

Element #1 is trimmed back during the corner. Element #2 is not trimmed.

c. **TRIM #2:**

Element #2 is trimmed back during the corner. Element #1 is not trimmed.

d. **NO TRIM:**

Element #1 and #2 are not trimmed.

e. **CONVEX:**

The radius will be a convex curve.

f. **CONCAVE:**

The radius will be a concave curve

g. **PIGTAIL:**

The radius will be a pigtail

7. **INDICATE INTERSECTION:**

Indicate inside the corner (quadrant) that you want to keep. The other lines will be relimited to give you a corner in the quadrant you indicated. Note that the TRIM CURVE and RADIUS menu options will affect the final appearance of the corner. The menu prompt ***Sel element 1 / YN erase corner*** appears.

a. **Y/N Erase Corner:**

Press the Y/N button on the mouse to erase the corner just created. At this point you may again indicate the intersection. This can be useful if you indicate the wrong corner the first time; just press the Y/N button and indicate a second time.

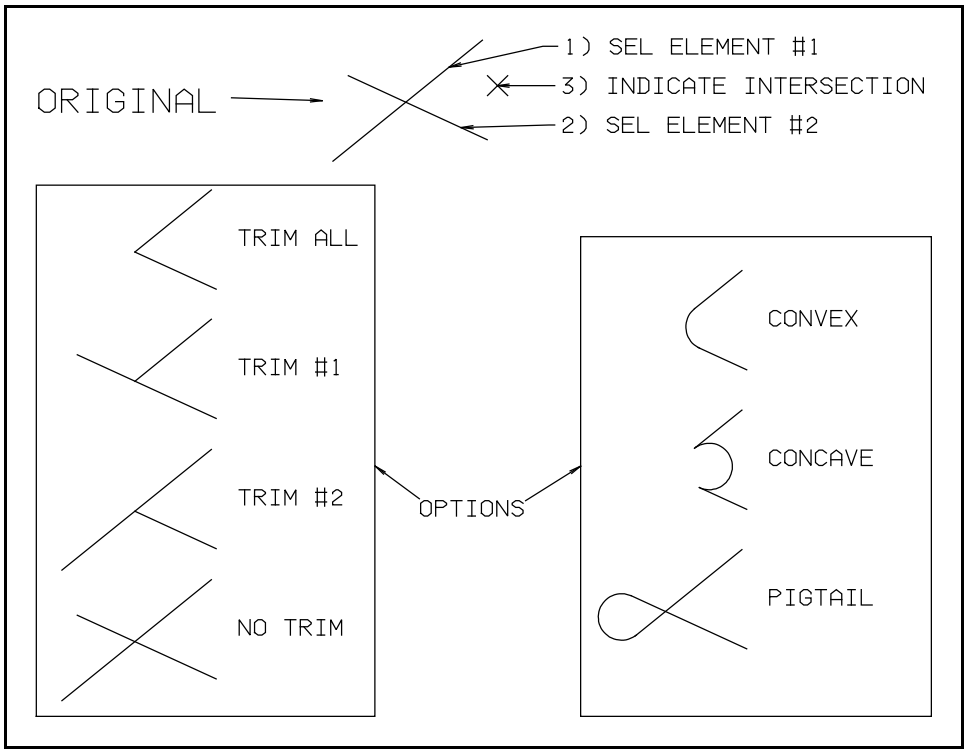

Figure 5 Examples of different Corner Sub Menu Options

B) TO CREATE A CORNER RADIUS USING A TANGENT ELEMENT:

There are times you will want to blend a radius into a corner but you will not know exactly what the radius is. You may just know that the radius touches a line or goes through a point. (Refer to Figure 6 on page 16-9 for examples of this type of corner.) The following procedure allows you to create that radius:

1. SELECT FKey CORNER and submenu /CORNER/. The menu prompt ***Sel element 1*** appears.

2. SELECT the first element. Select a line to which the radius will be tangent. The menu prompt ***Ind end saved / Sel element 2*** appears.

3. SELECT the second element. Select a second line to which the radius will be tangent. The menu prompt ***Ind center / Sel pt, ln or menu / Key rad = 0.0000*** appears.

4. SELECT a point through which the radius will go (or a line that it will be tangent to).

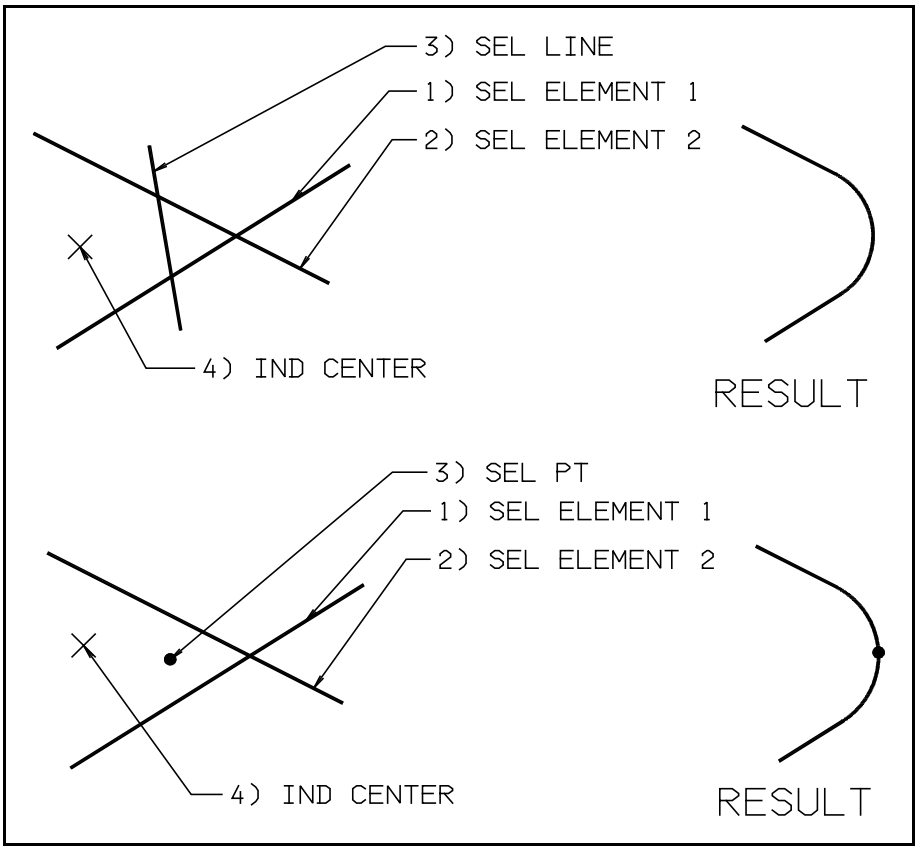

Figure 6 Examples of Corners with radius constructed from Points or Lines

5. **OPTION:** SELECT Submenu Options:

These Sub Menu options are the same as for Item 6.

6. **INDICATE Centre:**

Indicate inside the corner (quadrant) that you want to keep. The other lines will be relimited and the radius created and blended to give you a corner in the quadrant you indicated. Note that the TRIM and CURVE menu options will affect the final appearance of the corner.

a. **Y/N RESTORE OLD:**

Press the Y/N button on the mouse to erase the radius and return to again indicate the centre.

C) CREATE A SLOT USING FKey CORNER:

As a special case of FKey CORNER slots can be created by selecting two parallel lines. Concentric circles can also be used. Refer to ? on page 16-? for examples of slot creation.

1. SELECT the first element. Select the first parallel line (concentric circle).

2. SELECT the second element. Select the second parallel line (concentric circle).

3. SELECT line (or point). Select a line or point that defines the end of the slot.

4. INDICATE the center of the slot. Indicate a position at the centre of the slot radius.

5. The slot is created.

FKey CORNER

SUBMENU /CHAMFER/

FKey CORNER Submenu /CHAMFER/:

Refer to Figure 7 on page 16-13 to see the Road Map for FKey CORNER /CHAMFER/.

Chamfer is used to place chamfers at corners. This is usually done to take sharp edges off machined parts, to provide a lead in for pressing parts into bores or for weld preps. To use the CHAMFER option follow these steps:

1. SELECT FKey CORNER and submenu /CHAMFER/. The menu prompt ***Sel line 1*** appears.

2. SELECT the first line. The menu prompt ***Sel line 2*** appears.

3. SELECT the second line. The menu prompt ***Key length = 0.0000*** appears.

4. KEY in the chamfer length. Key in a length of .5 . The menu prompt ***Key angle = 45*** appears.

5. KEY in the angle of the chamfer line (or press the Y/N button on the mouse to accept the 45 degrees displayed).

6. **OPTION:** Select trim options on the subMenu:

   You may select TRIM options on the SubMenu. Selecting NO TRIM here is a handy way to draw a fillet weld.

7. INDICATE the corner. Indicate which of the four corners (i.e. the quadrant) that you want the chamfer to appear in.

Note that both the distance keyed and the angle keyed are referenced relative to the first line that you select. The distance keyed is the distance back along line 1 from the intersection of line 1 and line 2. The angle keyed is the angle relative to line 1. Refer to Figure 8 on page 16-13 to see an example of chamfer.

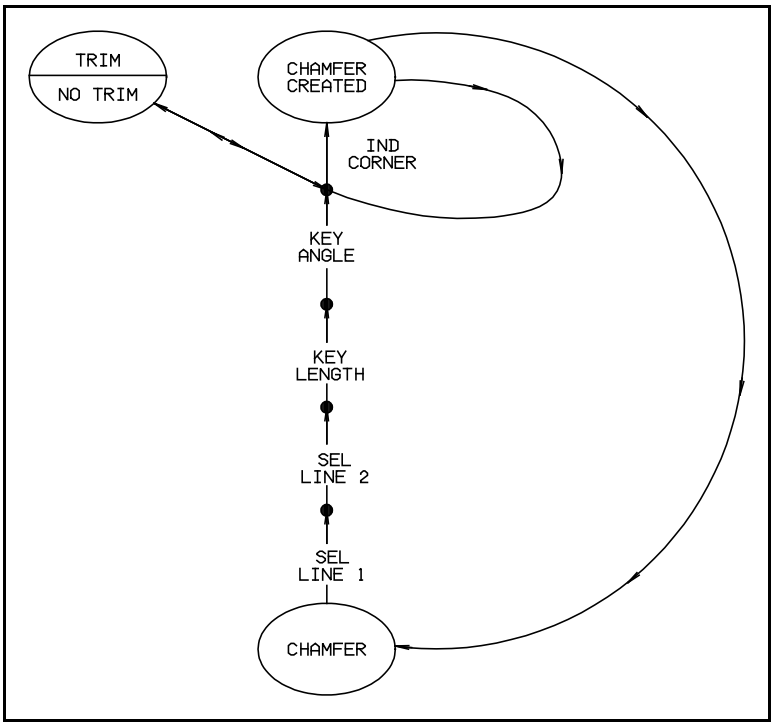

Figure 7 Road Map for FKey / CORNER / CHAMFER /

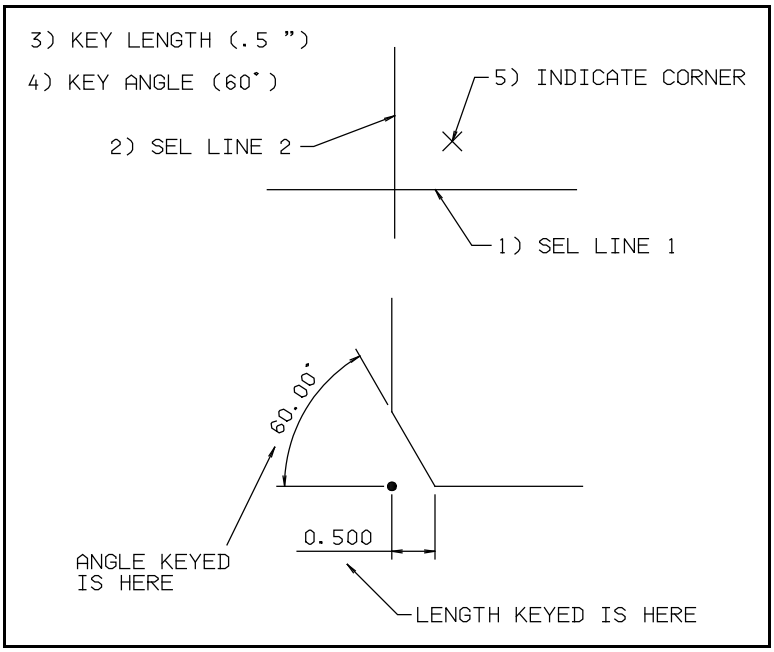

Figure 8 Example of a Chamfer

CHAPTER 18

FKey GROUP

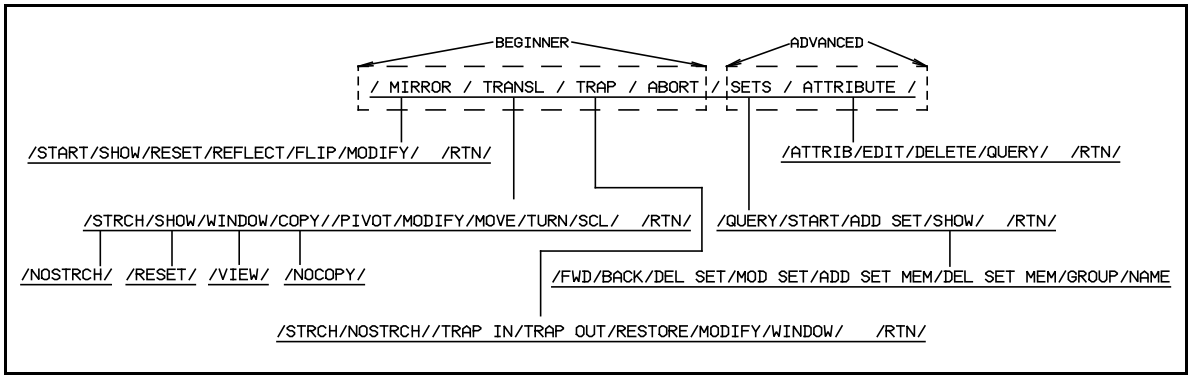

Figure 1 - Menu Item Tree for FKey GROUP

FKey GROUP is a very important and often used function key. Existing geometry can be modified. Elements can be flipped or reflected about a mirror line or they can be moved, turned or scaled. Copies of the geometry can be left behind, elements can be added or removed without halting what you are doing and the pivot point can be redefined.

The default method of using FKey GROUP is to individually select all elements to be mirrored or translated. Should there be too many elements (or should the elements be too small to conveniently select) , the TRAP option may be used to temporarily memorize elements that can then be mirrored or translated. The TRAP option is also used to form a temporary group of elements that can be used with other function keys (i.e. FKey TYPE to change line types or colors, FKey RELIMIT to break around and break inside and relimit elements, FKey SHOW to erase and NO SHO elements,).

A flow chart of FKey GROUP is shown in Figure 2 on page 18-8. Keep referring back to this figure as we explore Fkey GROUP.

FUNCTION KEY GROUP SUBMENU OPTIONS:

- /MIRROR/ Allows you to mirror selected elements by reflecting or flipping them across one or two mirror lines.
  - /START/ Starts the mirror process.
  - /SHOW/ Displays only the selected elements.
  - /RESET/ Restores the screen display after /SHOW/ has been selected.
  - /REFLECT/ Reflects a group of elements, or selected elements, across a single line or across two lines. The original group remains on one side and the reverse image on the other.
  - /FLIP/ Flips a group of elements, or selected elements, from a group that is to be reflected or flipped.
  - /MODIFY/ Adds or subtracts elements from a group that is to be reflected or flipped.
- /TRANSL/ To move, turn, scale or copy elements independently or, or relative to, other geometry.
  - /STRCH/ To stretch, using /TRANSL/, /MOVE/, /TURN/ or /SCL/, a group of elements that were trapped with the GROUP /TRAP/ /STRCH/ option, select submenu /STRCH/
  - /NOSTRCH/ To modify a group of elements without stretching them, select submenu /NOSTRCH/
  - /SHOW/ Displays only members belonging to a group.
  - /RESET/ Redisplays the entire screen.
  - /WINDOW/ To temporarily make the current window center the origin point, select /WINDOW/. This allows you to move geometry in relation to the window center and window coordinates (i.e. the X axis is positive to the right) instead of the true origin point and orientation.
  - /VIEW/ Returns to the normal view coordinate orientation.

- /COPY/ Leaves copies of a group as it is moved.
- /NOCOPY/ Moves a group without leaving a copy.
- //PIVOT/ Defines the pivot point for the group.
- //MODIFY/ To add members to a group, select non-group elements. To delete members from a group, select group members.
- //MOVE/ Moves a group of elements to a specified location.
- //TURN/ Rotates a group of elements a defined number of degrees. Also rotates a group of elements relative to another element.
- //SCL/ Changes the scale of a group of elements equally in the X and Y directions.

· /TRAP/ Creates a temporary group of elements that can be modified in a single operation.

- /STRCH/ Makes the elements that are trapped members of a stretch group that will stretch when modified using /TRANSL/, /MOVE/, /TURN/ or /SCL/.
- /NOSTRCH/ Makes the elements that are trapped members of a group that will not stretch when modified.
- /TRAP IN/ Groups all elements inside a trap boundary. The trap boundary may be a polygon, rectangle or window.
- /TRAP OUT/ Groups all elements outside a trap boundary.
- /RESTORE/ Restores the display of all elements.
- /MODIFY/ To add members to a group by selecting non-group elements. To delete elements from a group by selecting group members.
- /WINDOW/ To group all elements either in the current window, or not in the current window.

· /ABORT/ Cancels any group procedure before its completion. Also disbands any

group of elements.

- /SETS/ Creates a permanent association of elements (similar to a permanent group). NOTE: Individual elements may belong to any number of sets. Entire sets can be members of larger sets.
  - /QUERY/ Displays sets to which a selected element belongs.
  - /START/ Creates new elements and places them in a set.
  - /ADD SET/ Creates a set by selecting existing elements. Also creates a set from a group of elements.
  - /SHOW/ Displays all members of a specified set.
    - /FWD/ Moves forward through the set display pages.
    - /BACK/ Moves backward through the set display pages.
    - //DEL SET/ Deletes a set from a model.
    - //MOD SET/ Adds or deletes set members.
    - //ADD SET MEM/ Nests a set within a parent set.
    - //DEL SET MEM/ Deletes a nested set from a parent set.
    - //GROUP/ Makes the current set a temporary group.
    - //NAME/ Changes the name of the current set
- /ATTRIBUTE/ Creates data to be associated with selected elements or sets of elements.
  - /ATTRIB/ Defines an attribute and assigns it to an element. Also adds an attribute to a set of elements.
  - /EDIT/ Modifys the attribute data.
    - //NEXT/ Displays the desired attribute.

- //EDIT-NUM/ Changes the number of an attribute assigned to a defined element or set of elements.

- //EDIT-DATA/ Edits data relating to an attribute assigned to a defined element or set of elements.

- /DELETE/ Deletes an attribute assigned to a selected element or set of elements. Also deletes all attributes of a specified number.

- //NEXT/ Displays the desired attribute.

- /QUERY/ Finds the attributes assigned to a selected element or group of elements. Also finds all elements assigned to a defined attribute.

- //NEXT/ Displays the desired attribute.

FKey GROUP

SUBMENU /MIRROR/

BEGINNER SECTION

SUBMENU / GROUP / MIRROR / (Beginner):

FKey GROUP and submenu /MIRROR/ allows geometry to be flipped or reflected about either one or two mirror lines. A mirror line is a line about which geometry is mirrored and can be any line on the screen.

Flipped geometry is mirrored from one side of the mirror line to the other. The original geometry disappears. Should two mirror lines be used, the geometry is first flipped around the 1st mirror line and then immediately flipped about the 2nd mirror line. The original geometry is erased. Refer to Figure 5 on page 18-12 for the MIRROR road map diagram.

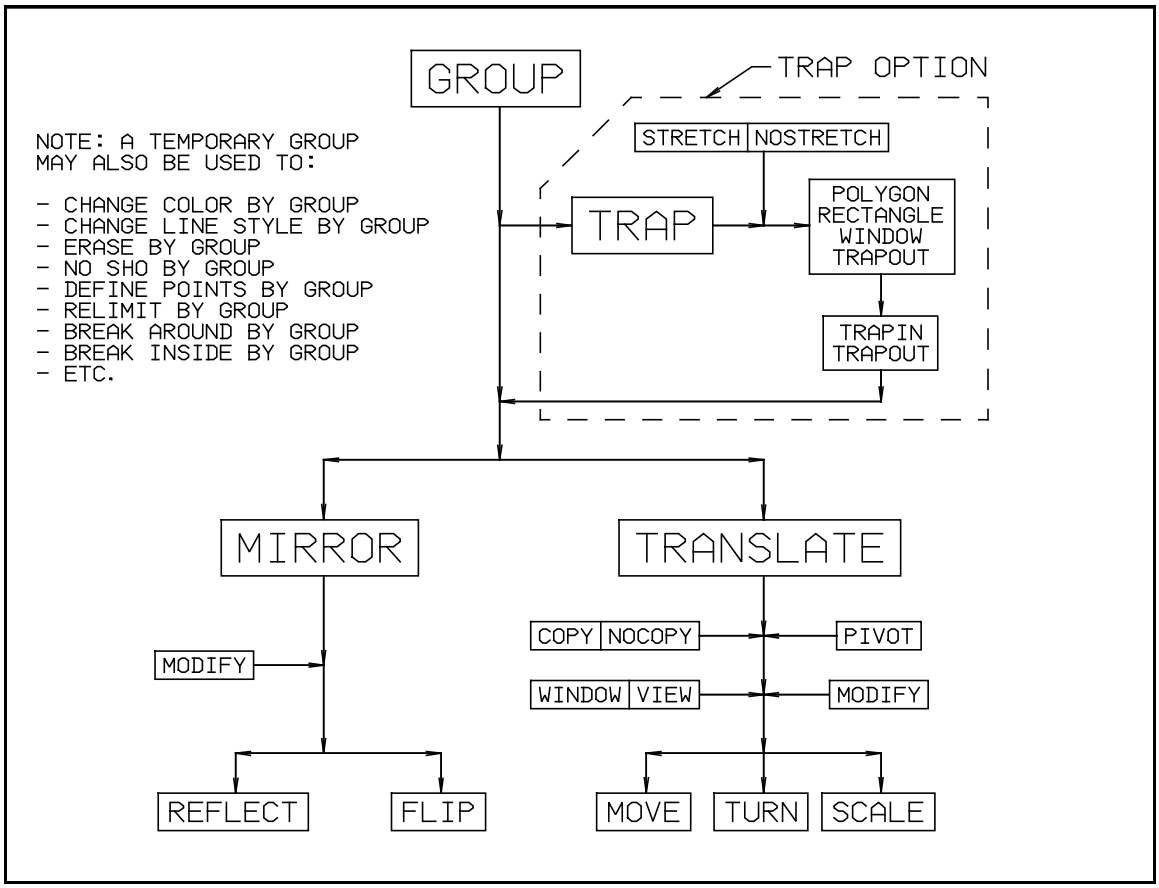

Figure 2 Summary of GROUP/TRAP/MIRROR/TRANSLATE FLOW

To use the MIRROR option follow these steps:

A) BEGIN THE MIRROR PROCEDURE:

1. **SELECT FKey GROUP and submenu /MIRROR/:**

   Sub menu options are now displayed and the mirror process is started. The menu prompt ***Sel mirror line 1*** appears near the top of the display screen.

2. **SELECT Mirror Line 1:**

   Select a line on the screen about which the geometry will be mirrored. The line will be highlighted the default green highlight colour. The menu prompt ***YN mirror line 2 / Sel any element / Sel menu*** appears.

3. **OPTION: SELECT Mirror Line 2:**

   Should a second mirror line be required press the **Y/N** key on the mouse and **SELECT** the second mirror line. The second mirror line will also be highlighted the default green highlight colour.

   An example of where a second mirror line would be required would be where you were drawing a component that is symmetrical about two axes; draw one quarter of it and then reflect it about two mirror lines.

4. **SELECT any Element:**

   Select the elements that you want reflected or flipped. As you select the elements they will be highlighted with the default green highlight colour.

B) SELECT ANY MIRROR OPTIONS YOU MAY WANT:

5. **OPTION: SELECT submenu SHOW/RESET:**

   You can at any time select submenu SHOW to allow you to see only which elements

have been selected. This can be useful where there is a lot of geometry in a small area; it will allow you to verify which elements are selected.

When you are finished with submenu SHOW, **SELECT** RESET to redisplay your entire drawing.

6. **OPTION: SELECT submenu MODIFY:**

Before you finish reflecting or flipping geometry you may modify your selection set by selecting submenu MODIFY. This submenu functions as a toggle. A selected element is deselected and a deselected element is selected.

When you are finished adjusting your selection set, press your **Y/N** key on the mouse to return, or **SELECT** submenu SHOW/RESET to display the selection set (see item 5)

C) PERFORM THE MIRROR ACTION:

7. **SELECT submenu REFLECT or FLIP:**

Submenu REFLECT will reflect the selected geometry around the selected mirror line(s). Copies of the geometry will be left behind. Refer to Figure 3 on page 18-11 for an example of submenu REFLECT.

Submenu FLIP will flip the selected geometry around the selected mirror line(s). Copies of the geometry will NOT be left behind. Refer to Figure 4 on page 18-11 for an example of submenu FLIP.

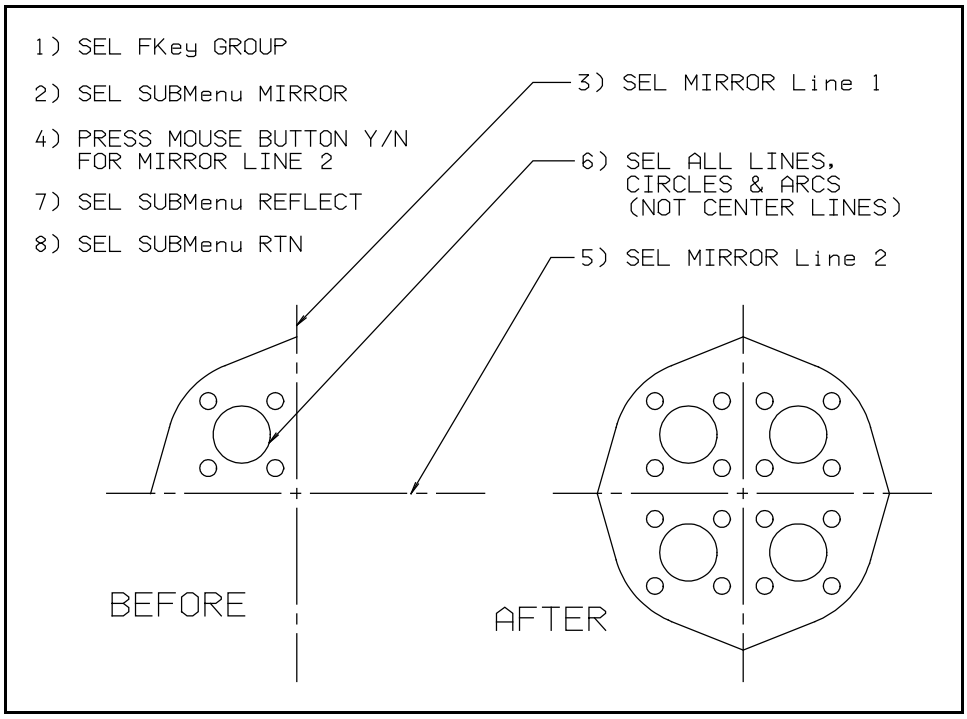

Figure 3 Example of SubMenu Reflect

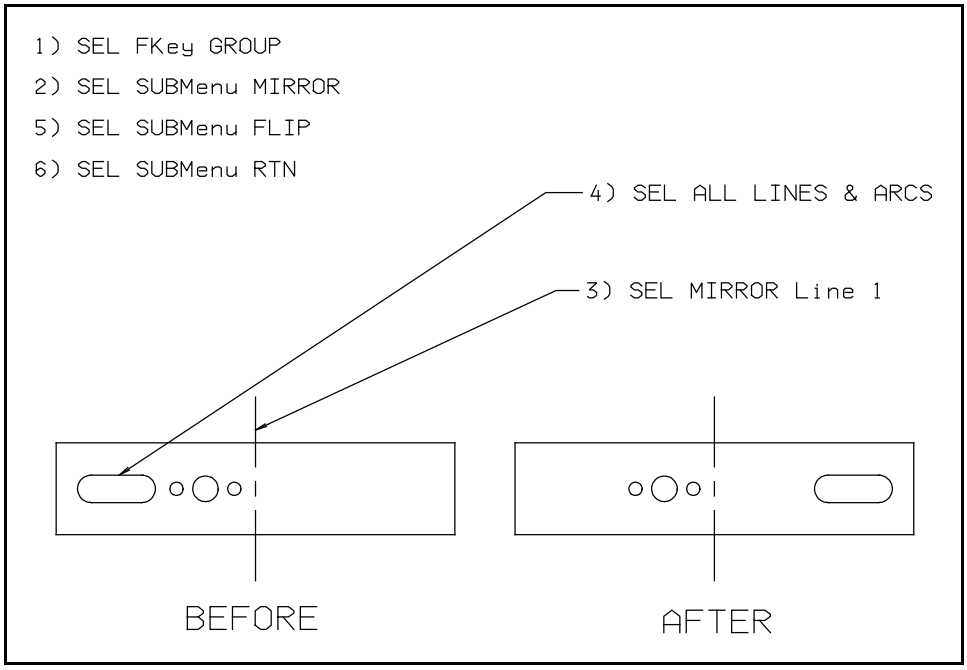

Figure 4 Example of SubMenu FLIP

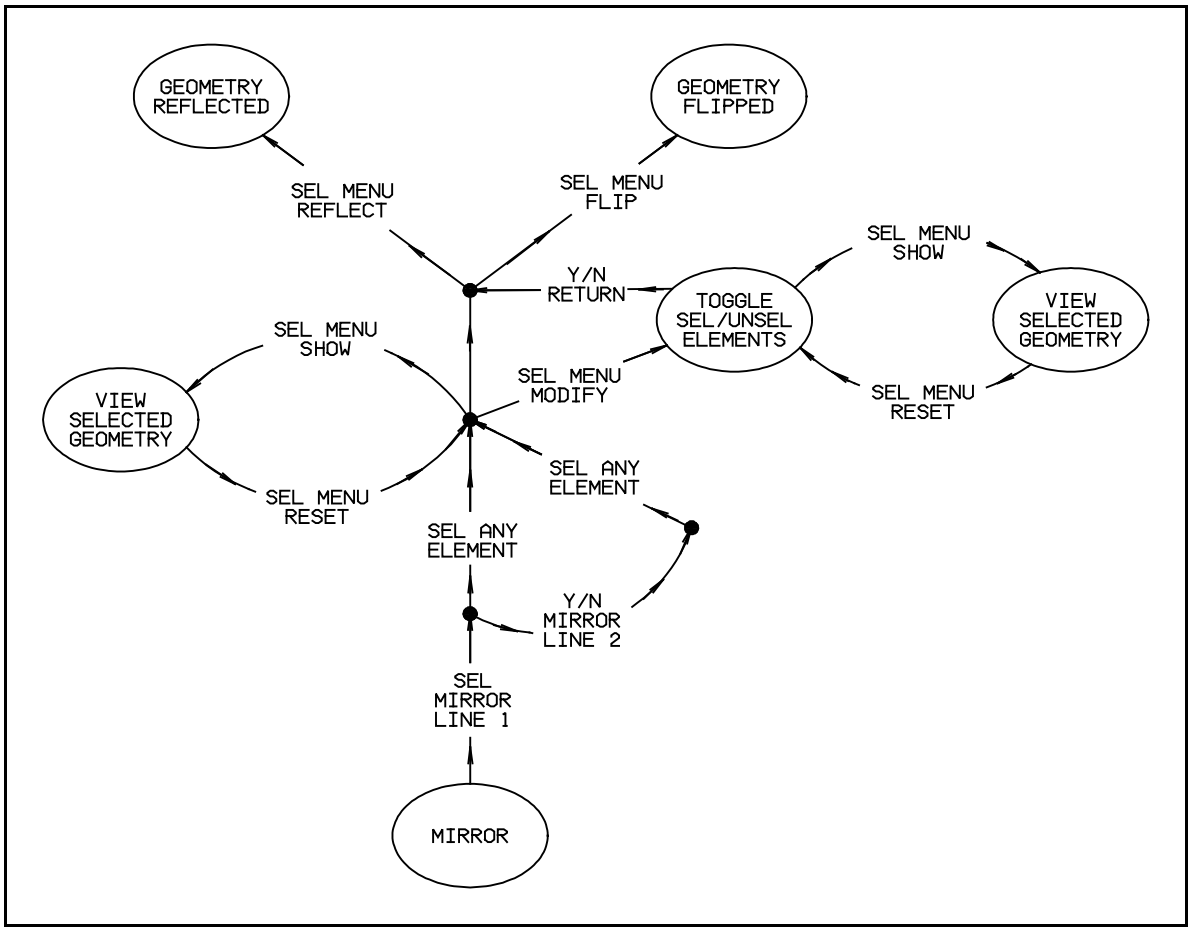

Figure 5 **Road Map for FKey GROUP/MIRROR**

FKey GROUP

SUBMENU /TRANSL/

BEGINNER SECTION

SUBMENU / GROUP / TRANSLATE / (Beginner):

FKey GROUP and submenu /TRANSL/ allows geometry to be moved, turned or scaled with copies optionally left behind; the pivot point can be interactively changed; and geometry can be interactively added or removed from the group of geometry being modified. Refer to Figure 6 on page 18-15 for the TRANSLATE Road Map diagram.

To use the TRANSLATE option follow these steps:

A) BEGIN THE TRANSLATION PROCEDURE:

1. **SELECT FKey GROUP and submenu /TRANSL/:**

   Sub menu options are now displayed and the translate process is started. The menu prompt ***Sel element / YN end*** appears near the top of the display screen.

2. **SELECT Elements to be TRANSLATED:**

   Select elements that you want to move, turn or scale. If an element is selected it will turn the default highlighted colour green. If a highlighted element is selected again it will lose its highlight. Thus you can toggle the selection on and off.

   All elements can be selected. This includes points, lines, circles, splines, dittos, notes, symbols, etc.

3. **PRESS Y/N Key to signal end of selection:**

   Press the Y/N to let the system know that you are finished selecting and deselecting elements and are ready to continue with the translation. Don't worry if you have forgotten to select an element as you can use the MODIFY feature later on to select or unselect elements.

   The menu prompt ***Sel pivot element / YN use origin*** appears.

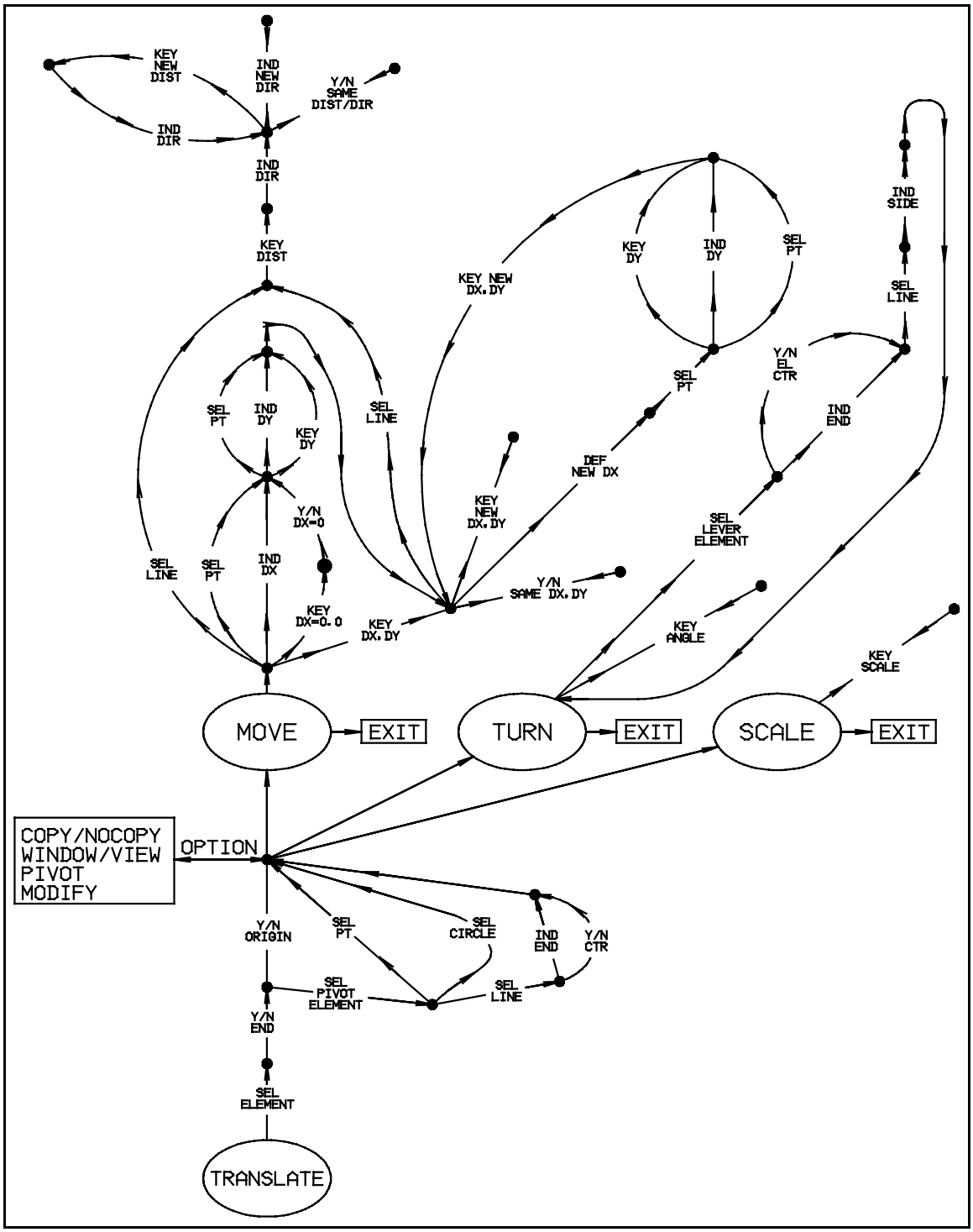

Figure 6 Road Map for FKey GROUP/TRANSLATE

B) DEFINE THE PIVOT POINT:

4. **SELECT Pivot Point:**

A pivot point must now be selected. Think of the pivot point as a thumb tack pushed through a reference point on a piece of transparent plastic on which you have drawn many lines and circles. When you take this piece of plastic and want to place the lines and circles on top of another drawing you will take the thumb tack and press it into a location on top of the drawing. Thus the pivot point defines a point about which all of your selected geometry is referenced. This definition point (or pivot point) is used to reposition or 'line up' the geometry about to be translated.

The menu prompt ***Key DX,DY / Key DX=0.0 / Ind DX / Sel pt or ln*** appears.

a. **SELECT Pivot Element:**

A Pivot element can be a point, line or circle.

i. **SELECT Point:**

Select any point and that point becomes the pivot point.

ii. **SELECT Line:**

Select any line on the screen. The menu prompt ***Ind end / YN element center*** appears.

(1) **INDICATE End:**

Indicate either one half of the line or the other. The pivot point will become the end point on the half of the line which you have indicated.

(2) **Y/N CENTRE:**

Press the Y/N key on the mouse to accept the middle of the line as the pivot point.

iii. **SELECT Circle:**

Select a circle and the circle centre becomes the pivot point.

b. **Y/N Origin:**

Press the Y/N key to accept the origin of the view as the pivot point.

C) DEFINE THE TRANSLATE OPTIONS:

5. **SELECT Translate Options:**

These Translate options are optional. They can be selected at any time.

a. **OPTION: COPY/NOCOPY:**

The COPY/NOCOPY Sub Menu item is a toggle. It's current active state is shown at the top of the screen.

If Sub Menu COPY is active, then copies will be left behind as the translation occurs.

If Sub Menu NOCOPY is active, then copies will not be left behind as translation occurs. NOCOPY is the default setting.

b. **OPTION: WINDOW/VIEW:**

The WINDOW/VIEW Sub Menu item is a toggle. It's current active state is shown at the top of the screen.

If Sub Menu WINDOW is active, then translation takes place relative to the display Window. This means that positive X is to the right and Positive Y is up. This can be very useful when view origins have been rotated; origin rotation can be ignored with the WINDOW setting.

If Sub Menu VIEW is active, then translation takes place relative to the co-ordinate system of the active VIEW. VIEW is the default setting.

c. **OPTION: PIVOT:**

The PIVOT Sub Menu item allows you to redefine the pivot point for the selected elements. This can be very useful should you wish to force the selected geometry to line up at different places for each translation.

d. **OPTION: MODIFY:**

The MODIFY Sub Menu allows you to interactively modify whether elements have been selected or unselected. Each time you SELECT an element its' status will change. If it is currently selected then it is unselected. If it is currently unselected, then it is selected.

This option can be quite useful as geometry can interactively be dropped off and picked up as the translations occur.

D) DETERMINE WHICH TRANSLATE OPERATION YOU WANT TO PERFORM:

6. **SELECT submenu MOVE, TURN or SCALE:**

At this point select one of the submenu options MOVE, TURN or SCALE. By default MOVE is preselected and shown underlined.

Submenu option MOVE will move all of the selected elements to a new location. All of the selected elements will be moved as one entity as the pivot point is moved to the new location.

Submenu option TURN will turn all of the selected elements about the pivot point.

Submenu option SCALE will scale all of the selected elements about the pivot point.

E) YOU DECIDE YOU WANT TO MOVE THE ELEMENTS TO A DIFFERENT LOCATION:

a. **SUBMENU MOVE:**

The program knows which elements are to be moved (all the selected elements) and it knows what reference point to use to move them (the pivot point). What it needs to know now is where to move to. This information can be acquired

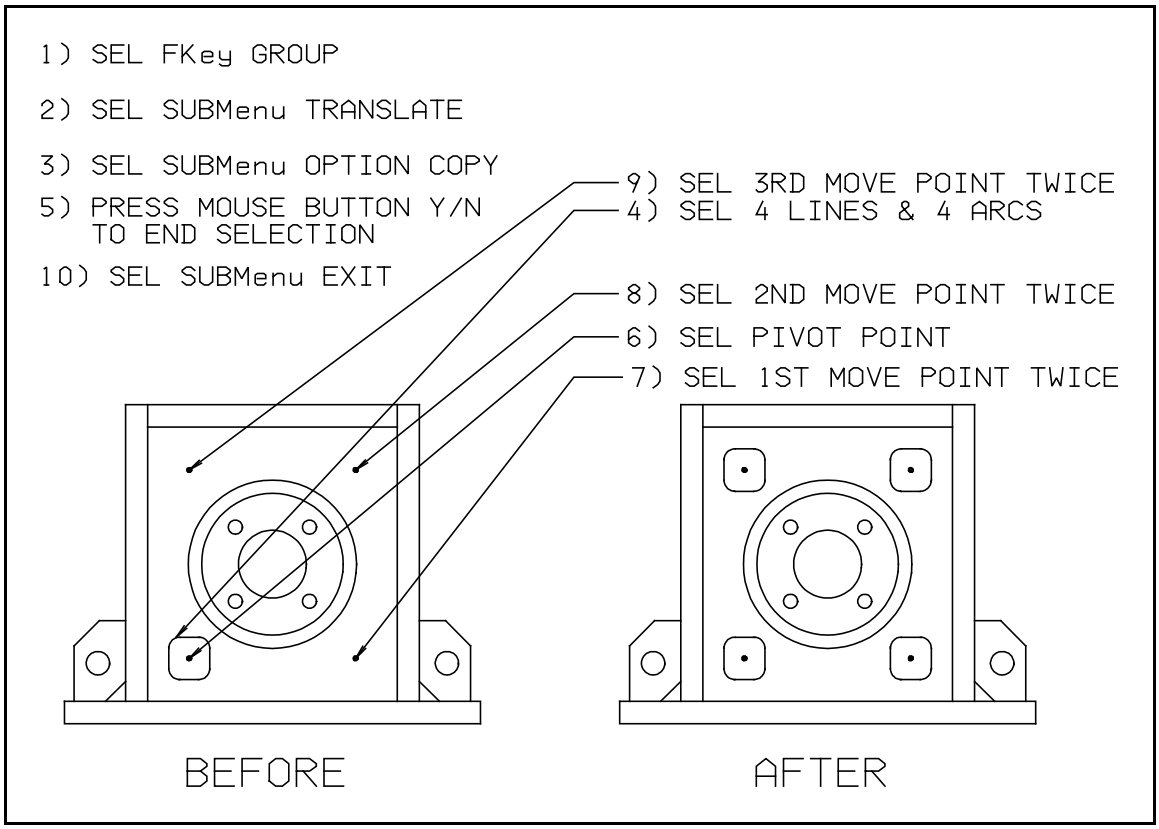

Figure 7 Example for SUBMenu MOVE

many different ways. (Note that the location the selected geometry is moved to is always provided in two separate steps; the X co-ordinate first and then the Y co-ordinate. This gives you the option of SELECTING/INDICATING two different places.) Refer to Figure 7 on page 18-19 for an example of submenu MOVE.

i. **SEL PT ... SEL PT:**

Select a point on the screen. The X co-ordinate of this point will be taken as the X position to move to.

Select another point on the screen (this could be, and in most cases is the same point as that for the X co-ordinate...in other words you select the same point twice). The Y co-ordinate of this point will be taken as the Y position to move to.

The pivot point along with the selected geometry will now move to the X,Y co-ordinate as found above.

(1) **Y/N SAME DX,DY:**

After the initial move you may press the Y/N key on the mouse to again move the selected geometry the same DX,DY.

(2) **KEY NEW DX,DY:**

After the initial move you may key a new DX,DY. For example key '-2.250,3.998' and the selected geometry will now move 2.250" to the left and 3.998" to the top (units are assumed inches).

(3) **DEF NEW DX:**

After the initial move you may define a new DX by selecting a point. After this point is selected you may then enter the DY by KEYING the DY, INDICATING the DY or SELECTING a second point.

ii. **IND DX ... IND DY:**

Move the cursor on the screen to the approximate location of the X co-ordinate of the position you want to move to and press the INDICATE key on the mouse. Do not confuse the SELECT and INDICATE Keys and remember that the INDICATE key only gives an approximate location. (Note that DX stands for 'DELTA X' and DY stands for 'DELTA Y'.)

Move the cursor on the screen to the approximate location of the Y co-ordinate of the position you want to move to and press the INDICATE key on the mouse.

The selected geometry will now be moved to the indicated position.

(1) **Y/N SAME DX,DY:**

After the initial move you may press the Y/N key on the mouse to again move the selected geometry the same DX,DY.

(2) **KEY NEW DX,DY:**

After the initial move you may key a new DX,DY. For example key '-3.789,1.456' and the selected geometry will now move 3.789" to the left and 1.456" to the top (units are assumed inches).

(3) **DEF NEW DX:**

After the initial move you may define a new DX by selecting a point. After this point is selected you may then enter the DY by KEYING the DY, INDICATING the DY or SELECTING a second point.

iii. **KEY DX ... KEY DY:**

In this case you enter the DX and the DY as two separate entries.

Key in the DX (Delta X) co-ordinate. For example press '1.3125' on the keyboard keys on top of the letter keys or on the number key pad (if the Num Lock light is on) and press the ENTER key. DX will now be registered as 1.3125 units...if the units are in inches this means that the DX is 1.3125". (Note that the 'period' key can be used for the decimal point.) Should the DX co-ordinate be '0' (zero) then all you have to do is press the Y/N key once as the program prompts you with 'KEY DX=0.0' and the Y/N key will accept the value of 0.0 for DX.

Key in the DY (Delta Y) co-ordinate. For example press '.75' and press the ENTER key. DY will now be registered as .75 units...if the units are in inches this means that DY is .75".

The selected geometry will now be moved 1.3125 units in the X direction and .75 units in the Y direction. (Note that the negative...or minus sign should be pressed prior to the DX,DY numbers to move the geometry in the opposite direction.)

(1) **Y/N SAME DX,DY:**

After the initial move you may press the Y/N key on the mouse to again move the selected geometry the same DX,DY.

(2) **KEY NEW DX,DY:**

After the initial move you may key a new DX,DY. For example key ’13.750,-8.375’ and the selected geometry will now move 13.750" to the right and 8.375" to the bottom (units are assumed inches).

(3) **DEF NEW DX:**

After the initial move you may define a new DX by selecting a point. After this point is selected you may then enter the DY by KEYING the DY, INDICATING the DY or SELECTING a second point.

iv. **KEY DX,DY:**

In this case you enter the DX and DY as a single entry with the DX and DY separated by a comma.

Enter DX,DY (i.e. Delta X,Delta Y) and press the ENTER key. For example should you want to move the selected geometry 1.625" to the right and 1.125" towards the bottom you would enter "1.625,-1.125" and press the ENTER key.

(1) **Y/N SAME DX,DY:**

After the initial move you may press the Y/N key on the mouse to again move the selected geometry the same DX,DY.

(2) **KEY NEW DX,DY:**

After the initial move you may key a new DX,DY. For example key ’-2.250,3.998’ and the selected geometry will now move 2.250" to the left and 3.998" to the top (units are assumed inches).

(3) **DEF NEW DX:**

After the initial move you may define a new DX by selecting a point. After this point is selected you may then enter the DY by KEYING the DY, INDICATING the DY or SELECTING a second point.

v. **SEL LINE:**

(1) **SELECT a line on the screen:**

This line will determine the angle that all of the selected elements will be moved.

(2) **KEY a distance:**

This is the distance that the selected elements will move.

(3) **INDICATE direction:**

The selected elements can move towards the top of the line or towards the bottom of the line. To tell the program which way you want the selected elements to move, indicate to one side or the other of the pivot point and the selected geometry will move the distance you have keyed, in the direction you have indicated and along the same angle as the line you have selected.

(4) **OPTIONS:**

You may now modify the movement of the selected elements as follows:

(a) **INDICATE Direction:**

Indicate again to change the movement direction.

(b) **KEY New Distance:**

Key in a new distance to move.

(c) **Y/N SAME DISTANCE/DIRECTION:**

Press the Y/N button on the mouse to repeat the movement the same distance and direction.

F) YOU DECIDE YOU WANT TO TURN THE ELEMENTS TO A DIFFERENT ANGLE:

b. **SUBMENU TURN:**

The program knows which elements are to be turned (all the selected elements) and it knows what reference point to use to move them (the pivot point). What it needs to know now is what is the angle to turn to. This information can be acquired two different ways. Refer to Figure 8 on page 18-24 for an example for submenu TURN.

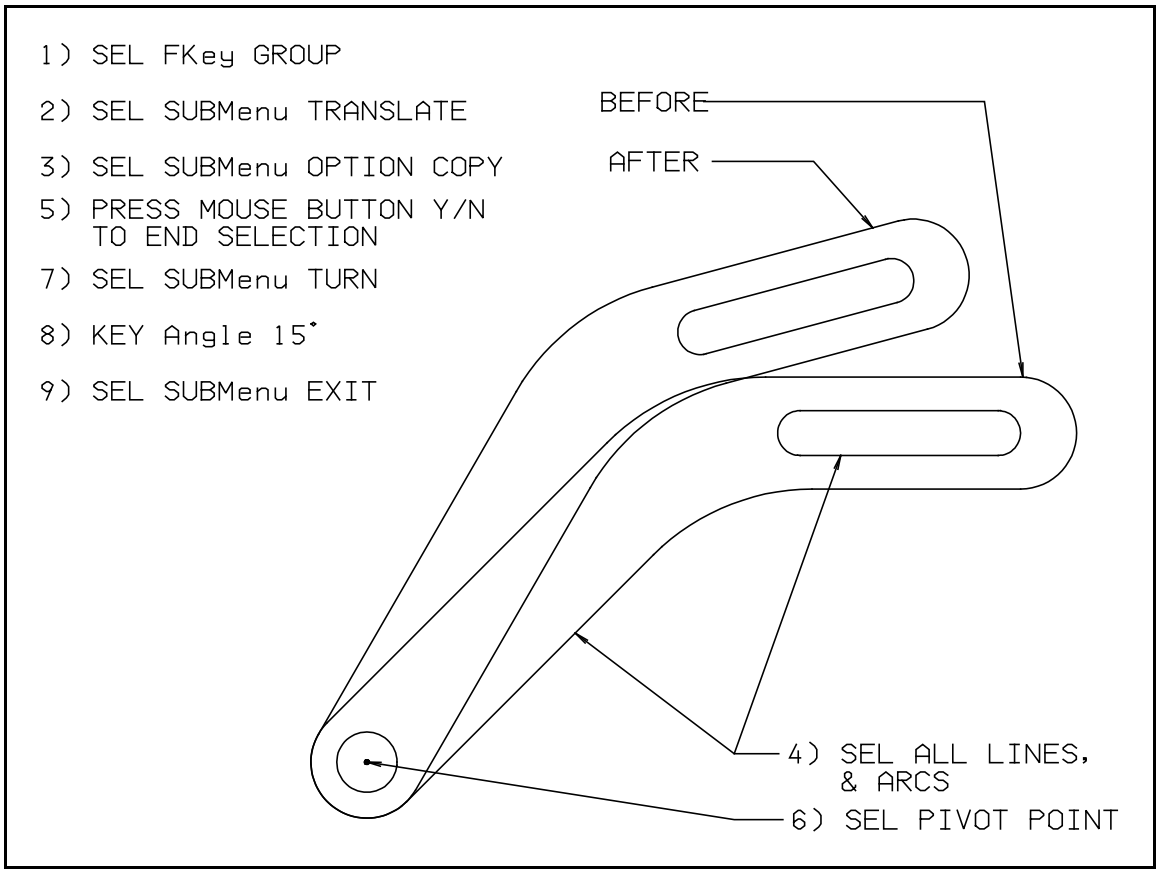

Figure 8 Example of SUBMenu TURN

i. **KEY ANGLE:**

Key in the angle (decimal degrees or degrees, minutes, seconds) that you want the selected geometry to turn. Counterclockwise is positive. After you key in the angle, the selected geometry will rotate about the pivot point. Remember you can optionally press the Y/N button on the mouse to repeat the turn again with the same angle.

ii. **SELECT LEVER ELEMENT:**

This option allows you to turn the selected elements by referencing a lever element (one of the selected lines) and turning it to the same angle as a SELECTED line. This is handy when you want to turn your selected geometry and force it to line up at the same unknown angle as some other geometry.

G) YOU DECIDE YOU WANT TO CHANGE THE SCALE OF THE ELEMENTS:

c. **SUBMENU SCALE:**

The program knows which elements are to be scaled (all the selected elements) and it knows what reference point to use to scale them about (the pivot point). What it needs to know now is what is the scale to change to. This information is acquired as follows: (Refer to Figure 9 on page 18-26 for an example of submenu SCALE).

i. **KEY SCALE:**

Key in the scale (e.g. 2 to make it twice as large) that you want the selected geometry to change to. ***When changing the scale of elements this way you are actually changing the length/size of geometry. For example a line 1½" long will become 3" long (assuming a scale factor of 2.0). This is different than changing the AUX VIEW Scale. In the AUX VIEW Scale the picture changes size (much like using an engineering/drafting scale on your drafting board) but the geometry remains full size and does not change length. Refer to the chapter on AUX VIEW for more information.***

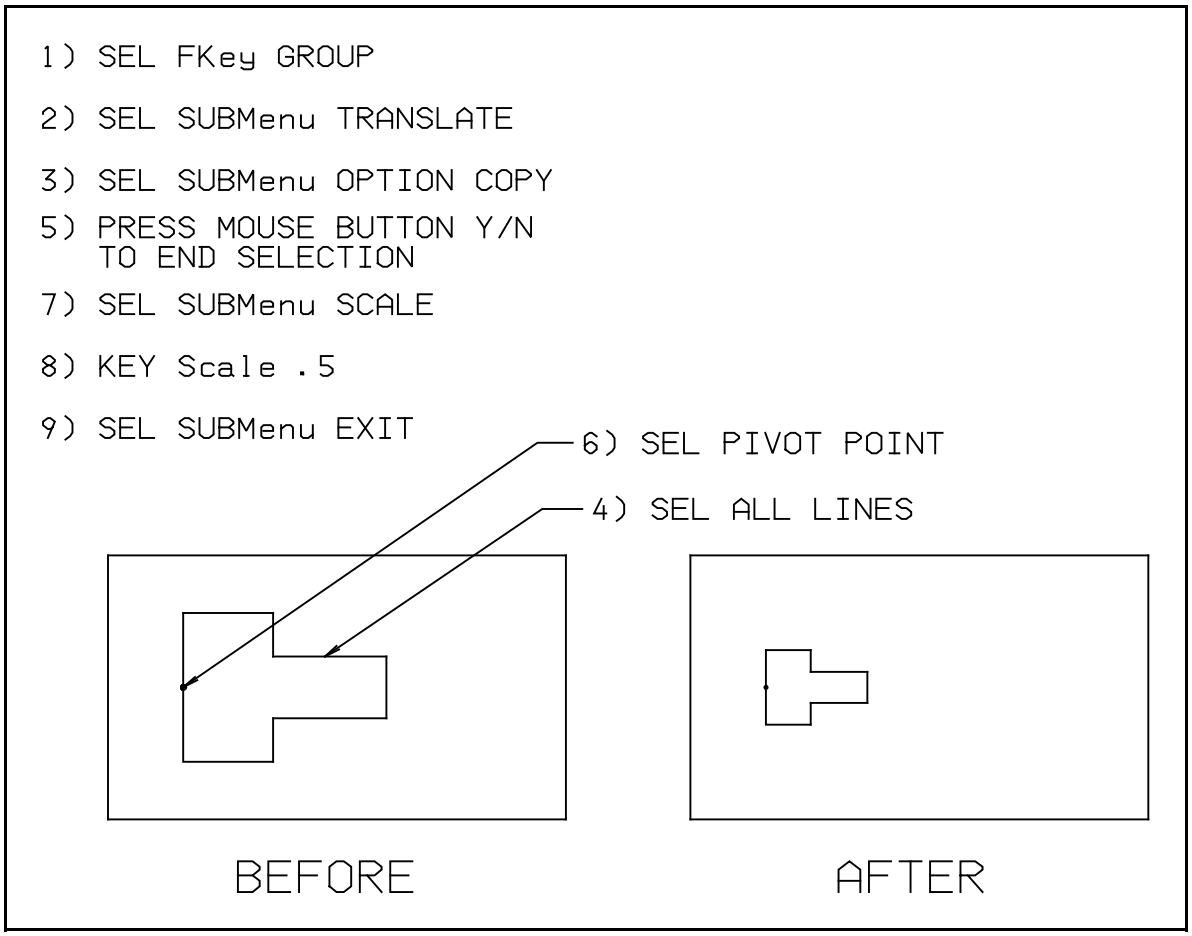

Figure 9 **Example of Submenu SCALE**

FKey GROUP

SUBMENU /TRAP/

BEGINNER SECTION

SUBMENU / GROUP / TRAP / (Beginner):

Sub MENU option TRAP under FKey GROUP allows geometry to be *trapped* into a *temporary group*. This temporary group of elements can then be moved, turned or scaled exactly the same way as if the elements had been selected individually. Refer to Figure 2 on page 18-8 to see how the TRAP OPTION is used with FKey GROUP.

It is important to remember that TRAP is an *option* that can make the selection of multiple elements much easier and faster. TRAP can also be used in a situation where there are only a few elements but these elements are very small and their individual selection requires you to use WINDOW and BOX to get close enough to select the elements individually. In this case the TRAP option is easier.

The TRAP option is also used to form a temporary group of elements that can be used with other function keys (i.e. FKey TYPE to change line types or colors, FKey RELIMIT to break around and break inside and relimit elements, FKey SHOW to erase and NO SHO elements,).

The temporary group can be built up by using the trap polygon or rectangle repeatedly, before you end the procedure. Traps can also be used with the stretch option.

Refer to Figure 10 on page 18-29 for the TRAP Road Map diagram.

There are four different methods for trapping elements. The first action taken determines which of the methods becomes active:

TRAP METHOD	FIRST ACTION REQ'D TO START TRAP METHOD	SEE PG
RECTANGLE	PRESS THE Y/N BUTTON ON THE MOUSE	18-30
POLYGON	SELECT A POINT OR INDICATE A POSITION	18-31
WINDOW	SELECT SUBMENU /WINDOW/	18-33
TRAP OUT	SELECT SUBMENU /TRAP OUT/	18-34

To use the TRAP option follow these steps:

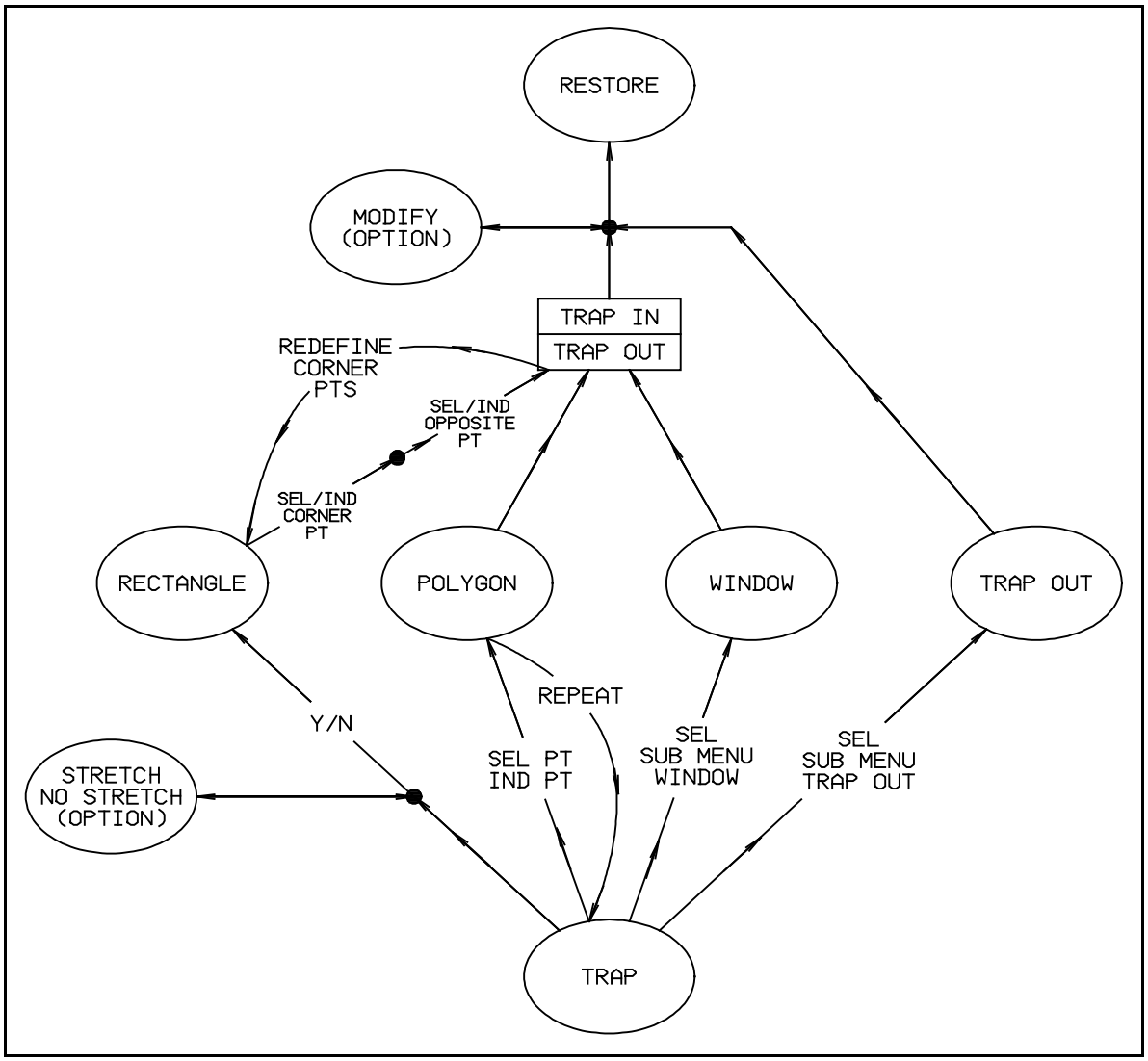

Figure 10 **Road Map for Fkey / GROUP / TRAP /**

A) BEGIN THE TRAP PROCEDURE:

1. **SELECT FKey GROUP and Submenu /TRAP/**:

   The TRAP procedure is started. The menu prompt ***Sel point / Ind point / YN rectangle*** appears near the top of the display screen.

2. **DETERMINE THE TRAP PROCEDURE YOU WANT TO USE:**

B) YOU DECIDE YOU WANT TO TRAP BY RECTANGLE:

a. **RECTANGLE:**

If the first key you press is the Y/N key on the mouse the TRAP method will be by RECTANGLE. Just prior to pressing the Y/N key you may optionally toggle the Stretch option to STRETCH.

i. **PRESS Y/N KEY on Mouse:**

Rectangle method is started. The menu prompt ***Sel corner pt / Ind corner***.

ii. **OPTION: SEL STRETCH:**

With the STRETCH option active, those elements completely within the rectangle will translate. For any element that is partly outside the rectangle the outside end of the element is anchored. As a translation occurs the element is stretched. Note that the STRETCH option *must* be selected at this point for the stretch to become active.

iii. **SELECT/INDICATE Corner Point:**

Select or Indicate one corner of the trap rectangle. The menu prompt ***Sel opposite point / Ind opposite corner*** appears.

iv. **SELECT/INDICATE Opposite Point:**

Select or Indicate the diagonally opposite corner point. The trap box now appears on the screen to show the location of the trap boundaries.

v. **OPTION: RESELECT/REINDICATE Corner Points:**

Diagonally opposite corner points can be reselected or reindicated.

vi. **SELECT submenu TRAP IN or TRAP OUT:**

Select submenu TRAP IN to memorize those elements that are inside the boundaries formed by the TRAP rectangle. (Elements partially inside the

TRAP rectangle boundary are included). Select submenu TRAP OUT to memorize all elements *except* those that are inside the TRAP rectangle boundary. TRAP IN and TRAP OUT are opposites of each other. When either TRAP IN or TRAP OUT is selected the elements that will be included in the temporary group are shown on the screen. All other elements become temporarily no shown.

vii. **OPTION: SELECT submenu MODIFY:**

Select submenu MODIFY to modify the temporary trap group shown. Any elements SELECTED will disappear as they are removed from the Trap Group.

viii. **RESTORE Drawing:**

SELECT submenu RESTORE to restore the complete drawing to the display.

ix. **Return to the GROUP Menu:**

To return to the GROUP menu (to continue with MOVE, TURN or SCALE) either SELECT submenu option / RTN / on the bottom menu, or SELECT Fkey GROUP again. NOTE: You may at this point access other Functions to change the color of the group, change the line style, or relimit all the lines in the group.

You have now finished with forming a temporary group by using a rectangle.

C) YOU DECIDE YOU WANT TO TRAP BY POLYGON:

b. **POLYGON:**

If the first key you press is the SELECT or INDICATE key on the mouse then the TRAP method will be by POLYGON.

i. **PRESS SELECT or INDICATE KEY on Mouse:**

Position your cursor on the screen where you want the Polygon to begin and press the SELECT or INDICATE key. The Polygon method is started. The menu prompt ***Sel point / Ind point / YN backup*** appears.

ii. **SELECT/INDICATE Next Polygon Point:**

Select or Indicate the next Polygon point. A boundary line will be created between the two indicated/selected positions. Keep repeating this option until the Polygon is complete. Note that the Polygon does not have to close; open ended polygons are automatically closed across the open ends.

iii. **SELECT submenu TRAP IN or TRAP OUT:**

Select submenu TRAP IN to memorize those elements that are inside the boundary formed by the TRAP Polygon. (Elements partially inside the TRAP Polygon are included). Select submenu TRAP OUT to memorize all elements *except* those that are inside the TRAP Polygon boundary. TRAP IN and TRAP OUT are opposites of each other. When either TRAP IN or TRAP OUT is selected the elements that will be included in the temporary group are shown on the screen. All other elements become temporarily no shown.

iv. **(OPTION) SELECT submenu MODIFY:**

Select submenu MODIFY to modify the temporary trap group shown. Any elements SELECTED will disappear as they are removed from the Trap Group.

v. **RESTORE Drawing:**

SELECT submenu RESTORE to restore the complete drawing to the display.

vi. **Return to GROUP Menu:**

To return to the GROUP menu (to continue with MOVE, TURN or SCALE) either SELECT submenu option / RTN / on the bottom menu, or SELECT Fkey GROUP again. NOTE: You may at this point access other Functions to change the color of the group, change the line style, or relimit all the lines in the group.

You have now finished with forming a temporary group by using a polygon.

D) YOU DECIDE YOU WANT TO TRAP BY WINDOW:

c. **WINDOW:**

If your first action is to SELECT submenu WINDOW the TRAP method will be by WINDOW.

i. **SELECT submenu WINDOW:**

The Window method is started. The menu prompt ***/TRAP IN/ /TRAP OUT/*** appears near the top of the display screen.

ii. **SELECT submenu TRAP IN or TRAP OUT:**

Select submenu TRAP IN to memorize those elements that are inside the boundary formed by the TRAP Window. (Elements partially inside the TRAP Window are included). Select submenu TRAP OUT to memorize all elements *except* those that are inside the TRAP Window boundary. TRAP IN and TRAP OUT are opposites of each other. When either TRAP IN or TRAP OUT is selected the elements that will be included in the temporary group are shown on the screen. All other elements become temporarily no shown. This can be a cause for concern when the TRAP OUT option is SELECTED. In this case the elements selected are the ones not on the screen; we are shown these elements but because they are not on the screen they are not visible and it appears that the drawing has disappeared. Just SELECT submenu RESTORE to restore your drawing. Nothing is lost.

iii. **OPTION: SELECT submenu MODIFY:**

Select submenu MODIFY to modify the temporary trap group shown. Any elements SELECTED will disappear as they are removed from the Trap Group. Note that this option will only work here if TRAP IN has been used for the WINDOW method.

iv. **RESTORE Drawing:**

SELECT submenu RESTORE to restore the complete drawing to the display.

v. **Return to GROUP Menu:**

To return to the GROUP menu (to continue with MOVE, TURN or SCALE) either SELECT submenu option / RTN / on the bottom menu, or SELECT Fkey GROUP again. NOTE: You may at this point access other Functions to change the color of the group, change the line style, or relimit all the lines in the group.

You have now finished with forming a temporary group by using a window.

E) YOU DECIDE YOU WANT TO TRAP EVERYTHING IN THE ACTIVE VIEW:

d. **TRAP OUT:**

If your first action is to SELECT submenu TRAP OUT the TRAP method will be by the TRAP OUT method. TRAP OUT is a special shortcut that places every element in the active view, visible or not, into the temporary trap group.

i. **SELECT submenu TRAP OUT:**

The Trap Out method is started.

ii. **OPTION: SELECT submenu MODIFY:**

Select submenu MODIFY to modify the temporary trap group shown. Any elements SELECTED will disappear as they are removed from the Trap Group.

iii. **RESTORE Drawing:**

SELECT submenu RESTORE to restore the complete drawing to the display.

iv. **Return to the GROUP Menu:**

To return to the GROUP menu (to continue with MOVE, TURN or SCALE) either SELECT submenu option / RTN / on the bottom menu, or SELECT Fkey GROUP again.

FKey GROUP

SUBMENU /SETS/

ADVANCED SECTION

FKey GROUP submenu /SETS/ allows you to create sets. Sets are permanent groupings of elements and/or text. Just as submenu /TRAP/ creates temporary groups, submenu /SETS/ can create permanent groups.

There are situations where you may have to repeatedly trap an assortment of elements into a temporary group and then perform some operation on them (such as moving them). This is one application where this assortment of elements can be formed into a set (i.e. a permanent group). The permanent group can be converted into a temporary group by using the /GROUP/ submenu option.

A) CREATING A SET FROM EXISTING GEOMETRY:

To create a set from existing geometry follow these steps:

1. Select FKey GROUP and submenu /SETS/ and /ADD SET/. The menu prompt ***Key new application name=USER*** appears near the top of the display screen.

2. Press the Y/N button on the mouse to accept the application name USER. (Note: USER is the only name possible so you must press the Y/N button on the mouse each time this menu prompt is presented).

3. The menu prompt ***Sel element*** appears. Select existing geometry on the screen. As geometry is selected is becomes highlighted (i.e. turns green). Selecting any geometry that is highlighted removes the highlight. Continue selecting until all of the elements you want in the set have been selected. The menu prompt ***Sel element / YN end / Key set name*** appears.

4. Key a set name that is representative of the geometry included in the set. For example type *VALVE* for a hydraulic valve.

5. The following information will appear near the top of the screen:

   Det name USER Sel element
   Set #001 VALVE #Elem=12 , #Sets=0 , # Parent=0

   The quantities and names may vary depending on what you have selected, but in this case the set name appears; the total number of elements included in the set are 12; no other sets are part of this set; and this set is not part of another set.

6. You have completed the set.

B) ADDING NEW GEOMETRY INTO A SET AS IT IS CREATED:

To add geometry into a set as it is created, follow these steps:

1. Select FKey GROUP and submenu /SETS/ and /START/. The menu prompt ***Key new application name=USER*** appears near the top of the display screen.

2. Press the Y/N button on the mouse to accept the application name USER. (Note: USER is the only name possible so you must press the Y/N button on the mouse each time this menu prompt is presented).

3. The menu prompt ***YN end / Key set name*** appears. Do not perform either of these options at this time. Select FKey LINE or CIRCLE or some other function key and proceed to create geometry. All elements created will be in the set. When you are finished creating the geometry select FKey GROUP and /SETS/ again. The menu prompt ***YN end / Key set name*** appears again. Press the Y/N button on the mouse to tell MICRO CADAM that you are finished creating the geometry, and then key a set name that is representative of the geometry just created. For instance key *DOOR* if you had just drawn a door.

4. The following information will appear near the top of the screen:

   Det name USER Sel element
   Set #001 DOOR #Elem=34 , #Sets=0 , # Parent=0

   The quantities and names may vary depending on what you have selected, but in this case the set name appears; the total number of elements included in the set are 12; no other sets are part of this set; and this set is not part of another set.

5. You have completed the set.

C) INTERROGATING EXISTING GEOMETRY TO DETERMINE WHICH SET IT BELONGS TO:

To interrogate existing geometry to determine which set it belongs to, follow these steps:

1. Select FKey GROUP and submenu /SETS/ and /QUERY/. The menu prompt ***Sel set element*** appears near the top of the display screen.

2. Select any element on the screen. If it is part of a set, the entire set will highlight (i.e.

turn green). If it is not part of a set, nothing will happen.

3. You have completed the query.

D) LOOK AT ALL OF THE EXISTING SETS:

To look at all of the existing sets, follow these steps:

1. Select FKey GROUP and submenu /SETS/ and /SHOW/. The menu prompt ***Key set name*** appears near the top of the display screen.

2. Key a set name or select submenu /FWD/ or /BACK/ to flip forward or backwards through all of the existing sets.

3. You have completed the looking at all of the existing sets.

E) DELETE AN EXISTING SET:

To delete an existing set, follow these steps:

1. Select FKey GROUP and submenu /SETS/ /SHOW/ and //DEL SET/. The menu prompt ***YN delete current set*** appears near the top of the display screen.

2. Select submenu /FWD/ or /BACK/ to display the set you want to delete.

3. Press the YN button on the mouse. The current set is deleted.

4. You have completed deleting an existing set.

F) MODIFY AN EXISTING SET:

To modify an existing set, follow these steps:

1. Select FKey GROUP and submenu /SETS/ /SHOW/ and //MOD SET/. The menu prompt ***Sel element / YN end*** appears near the top of the display screen and the entire drawing is redisplayed.

2. If an element is highlighted (i.e. it belongs to the set) select it and it will be dehighlighted (i.e. removed from the set). If an element is not highlighted (i.e. it does not belong to the

set) select it and it will become highlighted (i.e.

3. You have completed modifying an existing set.

G) ADD A SET MEMBER TO AN EXISTING SET:

To add a set member to an existing set, follow these steps:

1. Select FKey GROUP and submenu /SETS/ and /SHOW/. The menu prompt ***Key set name*** appears near the top of the display screen.

2. Key a set name or select submenu /FWD/ or /BACK/ to flip forward or backwards through all of the existing sets until you find the set to which you want to add another set.

3. Now, select submenu //ADD SET MEM/. The menu prompt ***Key set name / YN add set: #001 VALVE*** appears near the top of the display screen (the actual set names may vary).

4. Select /FWD/ or /BACK/ until you find the set you want to add. Then press the Y/N button on the mouse.

5. You have completed adding a set member.

H) REMOVE A SET MEMBER FROM AN EXISTING SET:

To remove a set member from an existing set, follow these steps:

1. Select FKey GROUP and submenu /SETS/ and /SHOW/. The menu prompt ***Key set name*** appears near the top of the display screen.

2. Key a set name or select submenu /FWD/ or /BACK/ to flip forward or backwards through all of the existing sets until you find the set from which you want to remove another set.

3. Now, select submenu //DEL SET MEM/. The menu prompt ***Key set name / YN delete set: #001 VALVE*** appears near the top of the display screen (the actual set names may vary).

4. Select /FWD/ or /BACK/ until you find the set you want to add. Then press the Y/N button on the mouse.

5. You have completed deleting a set member.

I) CHANGE A SET INTO A TEMPORARY GROUP:

This is a very useful option and can save much time for those elements that must be continually trapped and modified. To change a set into a temporary group, follow these steps:

1. Select FKey GROUP and submenu /SETS/ and /SHOW/. The menu prompt ***Key set name*** appears near the top of the display screen.

2. Key a set name or select submenu /FWD/ or /BACK/ to flip forward or backwards through all of the existing sets until you find the set from which you want to change into a temporary group.

3. Select FKey GROUP and submenu /SHOW/ and /GROUP/. The menu prompt ***YN group set*** appears near the top of the display screen.

4. Press the Y/N button on the mouse and the set becomes a temporary group.

5. Now proceed to use the temporary group as you want. You have completed changing a set into a temporary group.

J) CHANGE A SET NAME:

To change a set name, follow these steps:

1. Select FKey GROUP and submenu /SETS/ /SHOW/ and /NAME/. The menu prompt ***Key set name / YN delete set name*** appears near the top of the display screen.

2. Key a new set name.

3. You have completed changing a set name.

FKey GROUP

SUBMENU /ATTRIBUTE/

ADVANCED SECTION

FKey GROUP submenu /ATTRIBUTE/ allows you to attach attributes to a MICRO CADAM drawing. Attributes are textual information and data attached to notes and geometry.

For example, a drawing may have the following information attached to it:

AN ATTRIBUTE EXAMPLE		
ATTRIBUTE	**ATTRIBUTE IDENTIFIER**	**ATTRIBUTE DATA**
Part Name	1	Cylinder Head
Part Number	2	DC-982-A2
Weight	3	86 lbs
Color	4	Silver
Material	5	Aluminum
Cost	6	$ 298.49

The attributes and attribute identifiers are common to the entire MICRO CADAM drawing. The attribute data will vary depending on the part the data is attached to.

Attributes can be extracted from MICRO CADAM drawings using third party utilities.

Let's assume we have an automobile engine drawn in MICRO CADAM and we want to attach attribute information to it. The attributes and attribute identifiers are predefined, and attached to all of the geometry belonging to a single piece of the engine. In the example above, all of the geometry used to construct the cylinder head would have the attribute data as shown in the chart above.

To apply the attribute data to the cylinder head, follow these steps:

A) TO APPLY ATTRIBUTE DATA BY SELECTING INDIVIDUAL ELEMENTS:

1. Select FKey GROUP and submenu /ATTRIBUTE/. Submenu /ATTRIB/ is underlined by default. The menu prompt ***Key attribute # = 1*** appears.

2. Key the attribute number. The menu prompt ***Sel text / Key attribute data*** appears.

3. Key the attribute data. The menu prompt ***Sel element*** appears.

4. Select the first element. The menu prompt ***Sel element / YN end*** appears.

5. Continue selecting elements. When you are finished, press the Y/N button on the mouse. The attribute data is added to the selected elements. The menu prompt ***Key attribute # = 1*** appears again. Repeat steps 1 - 5 again as required.

B) TO APPLY ATTRIBUTE DATA TO A TEMPORARY GROUP OF ELEMENTS:

1. Create a temporary group of elements. See the chapter on FKey GROUP and /TRAP/.

2. Select FKey GROUP and submenu /ATTRIBUTE/. Submenu /ATTRIB/ is underlined by default. The menu prompt ***Key attribute # = 1*** appears.

3. Key the attribute number. The menu prompt ***Sel text / Key attribute data*** appears.

4. Key the attribute data. The temporary group (created in step 1) highlights. The menu prompt ***Sel element / YN end*** appears.

5. Press the Y/N button on the mouse to accept the temporary group. The attribute is now attached to all members of the temporary group.

6. Repeat steps 1 - 6 again as required.

C) TO APPLY ATTRIBUTE DATA TO A SET OF ELEMENTS:

1. Create a set of elements. See the chapter on FKey GROUP and /SETS/.

2. Select FKey GROUP and submenu /ATTRIBUTE/. Submenu /ATTRIB/ is underlined by default. The menu prompt ***Key attribute # = 1*** appears.

3. Key the attribute number. The menu prompt ***Sel text / Key attribute data*** appears.

4. Key the attribute data. The menu prompt ***Sel element / Key set name = cylinder*** appears (Note: The actual name may vary).

5. Key in the set name or press the Y/N button on the mouse to accept the set name displayed. The attribute is now attached to the set.

6. Repeat steps 1 - 5 again as required.

D) TO DELETE ATTRIBUTE DATA:

1. Select FKey GROUP and submenu /ATTRIBUTE/. Select submenu /DELETE/. The menu prompt ***Sel element / Key attribute # / YN key set*** appears.

2. Perform one of the following:

   a. Select an element. The menu prompt ***Sel element / Sel menu NEXT / YN delete*** appears.

      i. Select submenu /NEXT/ to toggle through the attributes until you have found the one you want to delete. Press the Y/N button on the mouse. The attribute is deleted.

   b. Key an attribute #. The menu prompt ***YN delete all*** appears.

      i. Press the Y/N button on the mouse and attribute will be deleted.

   c. Press the Y/N button on the mouse to acknowledge you want to remove an attribute from a set. The menu prompt ***Key set name / YN set #001 cylinder*** appears.

      i. Press the Y/N button on the mouse to confirm the set name. The menu prompt ***Sel element / Sel menu NEXT / YN delete*** appears.

      ii. Press the Y/N button on the mouse and the attribute is deleted from the set.

3. Repeat steps 1 - 2 again as required.

E) TO EDIT ATTRIBUTE DATA:

1. Select FKey GROUP and submenu /ATTRIBUTE/. Select submenu /EDIT/. Additional submenu options /EDIT-NUM/ and /EDIT-DATA/ appear.

2. Select either of the two new submenu options, and edit the attribute number or the data.

F) TO QUERY THE ATTRIBUTE DATA:

1. Select FKey GROUP and submenu /ATTRIBUTE/. Select submenu /QUERY/. The menu prompt ***Sel element / Key attribute # / YN key set*** appears.

2. Perform one of the following:

   a. Select an element. The menu prompt ***Sel element / Sel menu NEXT / YN delete*** appears.

      i. Select submenu /NEXT/ to toggle through the attributes.

   b. Key an attribute #. Select submenu /NEXT/ to toggle through the attributes.

   c. Press the Y/N button on the mouse to acknowledge you want to query an attribute from a set. The menu prompt ***Key set name / YN set #001 cylinder*** appears.

      i. Press the Y/N button on the mouse to confirm the set name. The entire set highlights.

      ii. Select submenu /NEXT/ to toggle through the attributes.

3. Repeat steps 1 - 2 again as required.

CHAPTER 19

FKey TYPE

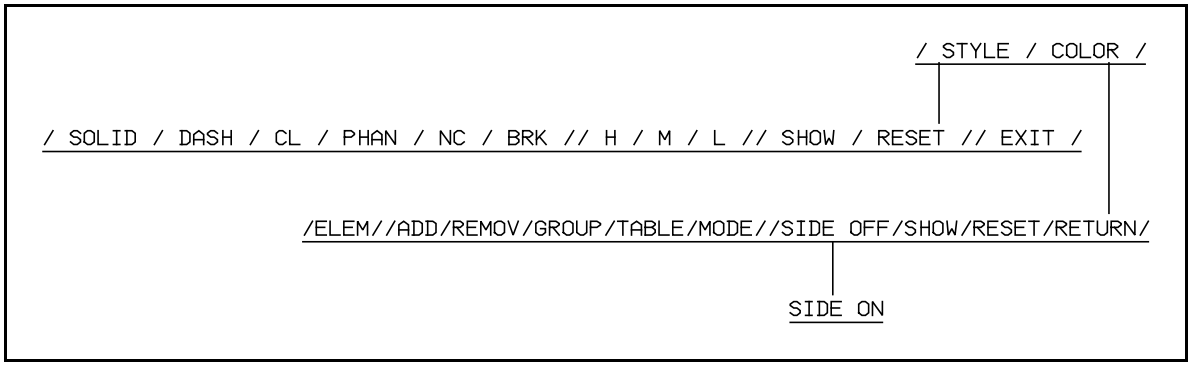

Figure 1 - Menu Item Tree for FKey TYPE

FKey TYPE allows you to change the line type (i.e. from solid to dashed to centerline, etc.) and to add and remove color from elements.

FUNCTION KEY TYPE SUBMENU OPTIONS:

SUBMENU STYLE:

- /SOLID/ Allows you to change the line type to solid.
- /DASH/ Allows you to change the line type to dashed.
- /CL/ Allows you to change the line type to centerline.
- /PHAN/ Allows you to change the line type to phantom.
- /NC/ Allows you to change the line type to numerical control. Numerical control lines are used to define the plot area when adding plot data to a drawing. Numerical control lines do not plot.
- /BRK/ Allows you to change the line type to break line. Only lines can be changed to line type /BRK/.
- // H / Allows you to change the line weight to heavy.
- // M / Allows you to change the line weight to medium.
- // L / Allows you to change the line weight to light.
- /SHOW/ Allows you to display only the line type (i.e. solid, dashed, etc.) of a defined type and line weight. This filters out all lines except those that have the line type and weight presently underlined.
- /RESET/ Select this option to redisplay all elements after selecting submenu /SHOW/
- /EXIT/ Exits this submenu and climbs one level higher (i.e. to the /STYLE/COLOR/ level)

SUBMENU COLOR:

- /ELEM/ Allows you to add color to or remove color from an element.
- //ADD/ Specifies that color is to be added to an element.
- /REMOV/ Specifies that color is to be removed from an element.
- /GROUP/ Allows you to group all elements of a temporary group. This temporary group can then be mirrored, translated, rotated, scaled or used in any other group operation.
- /TABLE/ Allows you to copy the color table definitions from another model into the current model.
- /MODE/ The mode option forces all elements that are created to have the mode color (instead of the default system default.
- /SIDE ON / Turns the side menu display on. (See Figure 3 on page 10.)
- /SIDE OFF/ Turns the side menu display off.
- /SHOW/ Shows only the active color. (The active color is the color with the white rectangle beside it.) This is a filter that allows only the active color to show through.
- /RESET/ Resets the display after submenu /SHOW/ has been selected. (i.e. redisplays all the elements.)
- /RETURN/ Returns (i.e. climbs) one submenu higher (to the /STYLE/ /COLOR/ submenu).

FKey TYPE

SUBMENU / STYLE /

SubMenu / STYLE / allows you to change the line type and weight of an element or group of elements. The different line types and weights available are shown in Figure 2 below.

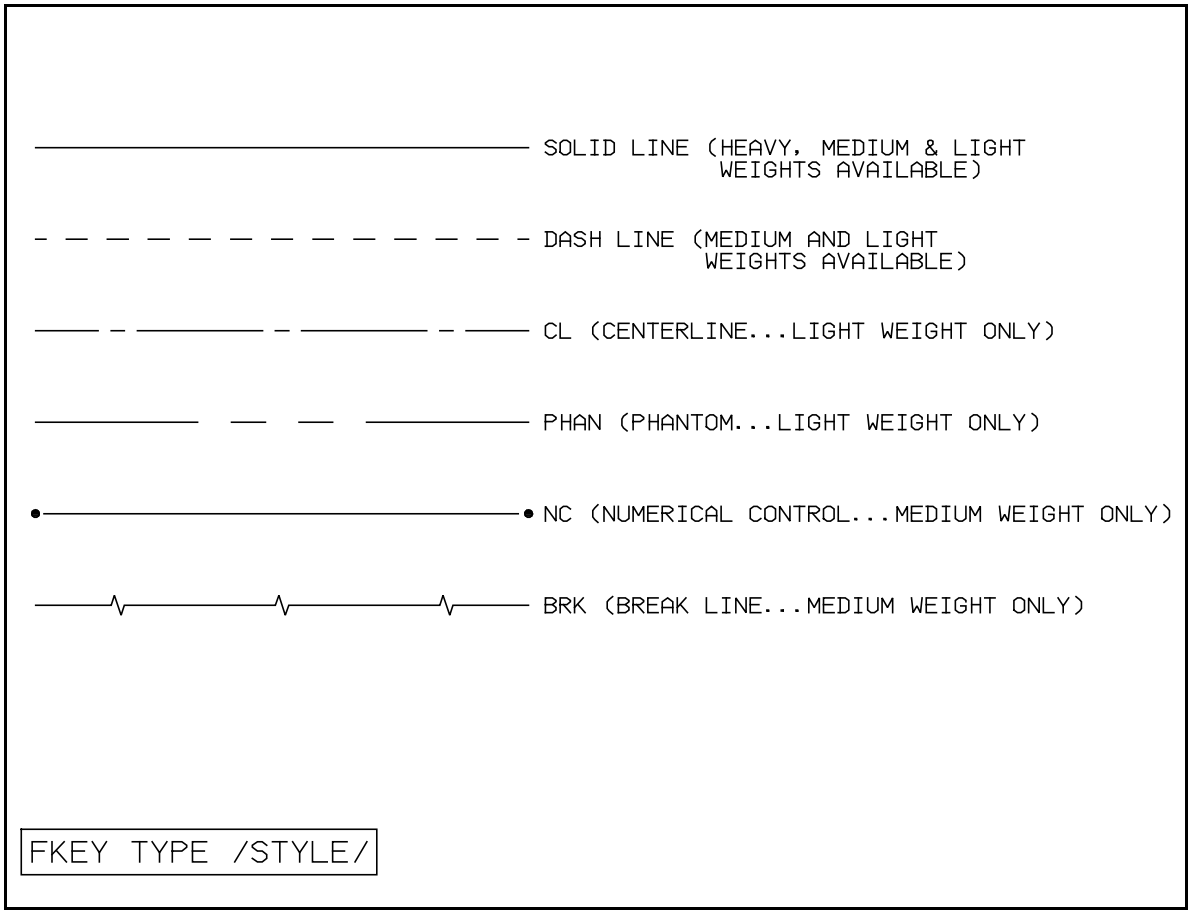

Figure 2 An example of different line styles and weights available

TO CHANGE THE LINE STYLE, FOLLOW THESE STEPS:

- SELECT FKey TYPE (if you are not already there)
- The SubMenu / STYLE / COLOR / will appear at the bottom of the screen and a menu prompt ***Sel menu*** will appear near the top of the screen.
- SELECT SubMenu / STYLE /

- A menu prompt ***Sel any element*** appears near the top of the screen. SubMenu / DASH / is underlined by default.

- Select any element on your screen and that element will become the line style and line weight that are currently underlined. (NOTE: When line type /BRK/ is underlined, the menu prompt reads ***Sel line*** since only lines can become break elements.)

  For example to change a line type to a heavy solid line, select submenu ***/ SOLID /*** and ***/ H /*** so that they are underlined, and then select a line (or circle) on the screen. The line (or circle) will be come a heavy solid line.

Numerical control lines are used for adding plot data to a drawing. NC lines have points displayed at the ends (unless erased) and the line is shortened back from the point at either end. NC lines have one other special property...they do not plot. This can be useful should you want some lines on your drawing for alignment purposes, but do not want to plot them.

As well as changing lines to NC lines you are also able to change points to NC points. This can be useful since an NC point will not erase when FKey SHOW SubMenu /ERASE PTS/ is used. When the program trys to erase an NC point it will fail because a point and an NC point are two different entities. An NC point can be erased using FKey SHOW /ERASE/.

FKey TYPE

SUBMENU / COLOR /

SubMenu / COLOR / allows you to add or remove color from elements; copy a color definition table from another drawing; group all elements of one color; and display only elements of a fixed color number. Figure 3 below shows a screen display with the color side bar on. Let's take a

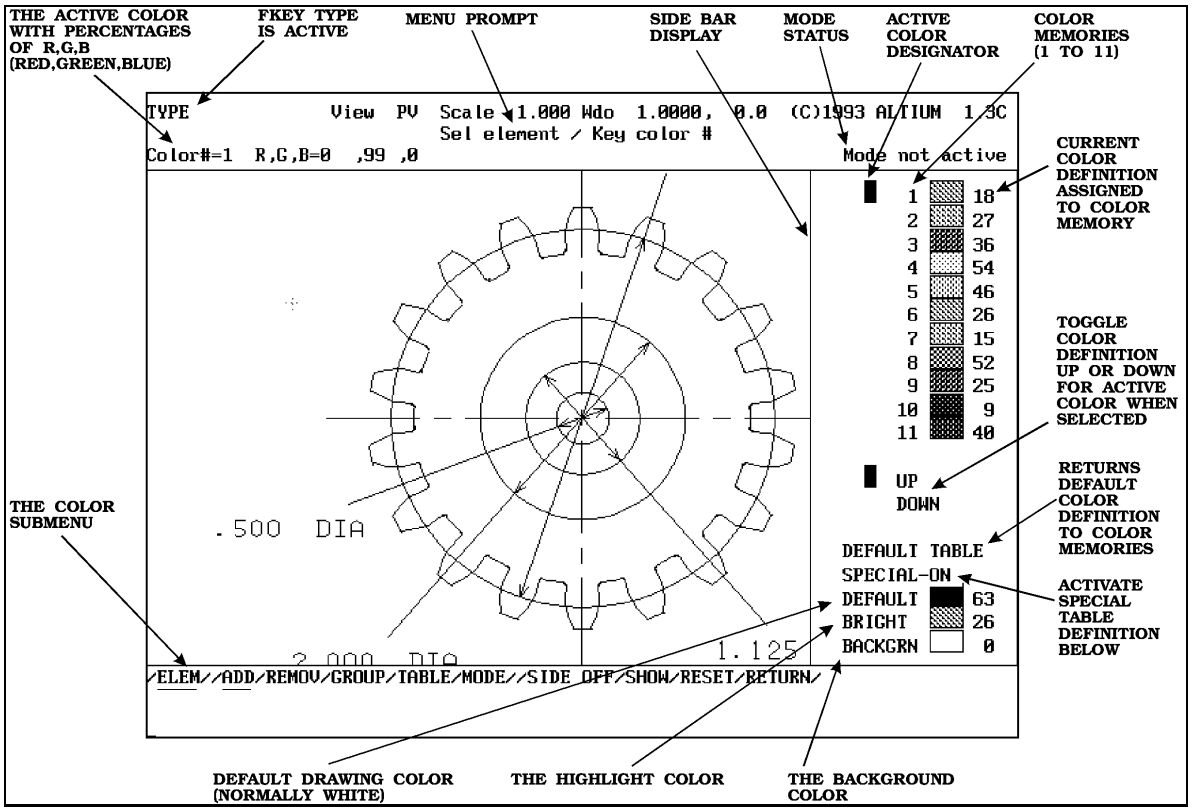

Figure 3 An example of the color sidebar display.

look at the different menu items:

THE ACTIVE FUNCTION KEY:

At the top left hand corner of the display screen the word TYPE is displayed. This is the active function key.

THE SUBMENU DISPLAY FOR THE ACTIVE FUNCTION KEY:

At the bottom of the display screen the submenu for FKey TYPE is displayed. Note that

submenu items /ELEM/ and /ADD/ are underlined (this means they are active).

THE ACTIVE COLOR:

The active color with its percentage of R,G,B (i.e. Red, Green, Blue) is displayed near the top of the screen on the left side. In this figure the R,G,B values are 0,99,0 which means that the color is comprised of 0% red, 99% Green and 0% blue.

THE MENU PROMPT:

The menu prompt ***Sel element / Key color #*** is displayed near the top of the display screen. The program is providing us with two different things that we can do.

THE MODE STATUS:

The mode status is displayed near the top of the screen on the right hand side. The present status is ***Mode not active***. To turn the mode on for color #1, select submenu option /MODE/ and press the Y/N button on the mouse. The mode status will change to read ***Mode # = 1*** and a capital ***M*** will appear to the left of color memory #1. Every new element created will now have the color #1 assigned to it.

To turn the mode off for color #1, select submenu option /MODE/ and press the Y/N button on the mouse. The mode status will change to read ***Mode not active*** and a capital ***M*** will disappear to the left of color memory #1.

THE COLOR MEMORIES:

The color memories are listed on the left side of the side bar display. The color memories range from 1 to 11. Think of these as 11 memories on your calculator. Each of the memories can hold a value. The value that it holds is the number on the right side of the side bar display. In the case of color #1 this value is #18. This means that color memory #1 has been assigned color #18 from the palette of 64 colors.

THE CURRENT COLOR DEFINITION:

The current color definition is one of the 64 available colors from the color palette that has been assigned to the color memory. In Figure 3 color memory #1 has been assigned color #18 from

the color palette; color memory #2 has been assigned color #27 from the color palette; color #3 has been assigned color #36 from the color palette; etc. The color palette has 64 colors (including black) that can be assigned to any one of the 11 color memories (and also the special table definition at the bottom of the side bar which includes ***DEFAULT***, ***BRIGHT*** and ***BACKGRN*** definitions).

THE UP OR DOWN MODIFIERS FOR COLOR DEFINITION:

The active color definition can be changed by selecting the ***UP*** or ***DOWN*** options on the sidebar menu. Each time the ***UP*** or ***DOWN*** is selected the active color definition will be increased or decreased by one number.

If the side bar special item says ***SPECIAL-ON*** then the UP or DOWN modifiers will modify the current color definition for the active color.

If the side bar special item says ***SPECIAL-OFF*** then the UP of DOWN modifiers will modify the current color definition for the special table definitions (i.e. the bottom of the side bar which includes ***DEFAULT***, ***BRIGHT*** and ***BACKGRN*** definitions). The ***UP*** and ***DOWN*** side bar items will now work for the special table.

THE DEFAULT TABLE:

Every time you start a new blank drawing the color definitions revert to system defaults. Should you change the color definitions in your drawing and then wish to revert to the system defaults, just select the ***DEFAULT TABLE*** item on the side bar display.

THE SPECIAL TABLE DEFINITION:

The special table definition allows you to modify your system default colors. To activate the special table, select the side bar special item that says ***SPECIAL-ON***. The side bar special item will then change to read ***SPECIAL-OFF*** and the special table will now be active. (Do the opposite to turn it off).

The ***DEFAULT*** menu item is the default drawing color. This color is normally white (i.e. menu item 63). In other words it an element is not assigned a color it will be displayed in the default color.

The ***BRIGHT*** menu item is the color that an element will change to when it is highlighted. For example during a /GROUP/ /TRAP/ /TRANSLATE/ option, all elements in the group will be

highlighted (this is normally a green color...color #26).

The ***BACKGRN*** menu item is the background color. The default color is black.

Specific information on the SubMenu options are listed with page numbers as follows:

FUNCTION KEY TYPE		
TYPE ITEM	DESCRIPTION	PAGE NO.
SubMenu /ELEM/ /ADD/	Adding color to an element.	19-14
SubMenu /ELEM/ /REMOV/	Removing color from an element.	19-15
SubMenu /ELEM/ /GROUP/	Forming a group from all elements that have the same color.	19-15
SubMenu /ELEM/ /TABLE/	Copying the color definitions from another drawing to your active drawing.	19-16
SubMenu /ELEM/ /MODE/	Turning the mode option on and off.	19-17
SubMenu /ELEM/ /SIDE ON/ & /SIDE OFF/	Turning the side bar menu on and off.	19-17
SubMenu /ELEM/ /SHOW/ & /RESET/	To display all elements that have the active color. To reset the display so that all elements are again displayed.	19-18

TO ADD COLOR TO AN ELEMENT FOLLOW THESE STEPS:

- SELECT FKey TYPE (if you are not already there)
- SELECT SubMenu / COLOR / (if it is not already underlined)
- The color SubMenu will appear at the bottom of the screen and a menu prompt ***Sel element / Key color #*** will appear near the top of the screen.
- Select submenu /ELEM/ and //ADD/ (if they are not already underlined).
- (OPTIONAL) Select submenu /SIDE ON/ to turn the side menu display on. Key a color number (i.e. from 1 to 11) or select a color on the side bar to change the active color. The active color has a white rectangle beside it.
- SELECT any element and that element's color will change to the active color.
- A menu prompt ***Sel element / Key color # / YN restore*** appears near the top of the screen.

- If you press the Y/N button on the mouse, the original color will be restored.

NOTE: Color can be added to a group of elements if they are first formed into a group.

TO REMOVE COLOR FROM AN ELEMENT FOLLOW THESE STEPS:

- SELECT FKey TYPE (if you are not already there)
- SELECT SubMenu / COLOR / (if it is not already underlined)
- The color submenu will appear at the bottom of the screen and a menu prompt ***Sel element / Key color #*** will appear near the top of the screen.
- Select submenu /ELEM/ and //REMOVE/ (if they are not already underlined).
- SELECT any element and that element's color will be removed and replaced with the default color (normally white at system startup).
- A menu prompt ***Sel element / Key color # / YN restore*** appears near the top of the screen and the message ***(color removed)*** appears immediately underneath the prompt.
- If you press the Y/N button on the mouse, the color will be restored.

NOTE: Color can be removed from a group of elements if they are first formed into a group.

TO FORM A GROUP FROM ALL ELEMENTS THAT HAVE THE SAME COLOR FOLLOW THESE STEPS:

- SELECT FKey TYPE (if you are not already there)
- SELECT SubMenu / COLOR / (if it is not already underlined)
- The color submenu will appear at the bottom of the screen.
- Select submenu /ELEM/ and //GROUP/ (if they are not already underlined).
- (OPTIONAL) Select submenu /SIDE ON/ to turn the side menu display on. Key

a color number (i.e. from 1 to 11) or select a color on the side bar to change the active color. The active color has a white rectangle beside it.

- A menu prompt ***Sel element / Key color # / YN group*** will appear near the top of the screen.

- Press the Y/N button on the mouse and all elements in the active view, having the same color as the active color will be formed into a group.

- The message ***(# grouped = XX)*** (where XX is the number of elements grouped) appears near the top of the screen.

TO COPY THE COLOR DEFINITIONS FROM ANOTHER DRAWING TO YOUR ACTIVE DRAWING FOLLOW THESE STEPS:

- SELECT FKey TYPE (if you are not already there)

- SELECT SubMenu / COLOR / (if it is not already underlined)

- The color submenu will appear at the bottom of the screen.

- Select submenu //TABLE/ (if it is not already underlined).

- A menu prompt ***Key filename / Key D for default / YN call*** will appear near the top of the screen.

- You can now do one of the following three things:

  - Key in a filename and the color definitions from that model will be copied into your active model.

  - Key ***D*** (must be a capital D) and the color table will return to the default color definitions.

  - Press the Y/N button on the mouse and you will be presented with a list of drawings. Select a drawing from the screen and the color definition fro that model will be copied to your active model.

TO TURN THE MODE OPTION ON OR OFF, FOLLOW THESE STEPS:

- SELECT FKey TYPE (if you are not already there)
- SELECT SubMenu / COLOR / (if it is not already underlined)
- The color submenu will appear at the bottom of the screen.
- (OPTIONAL) Select submenu /SIDE ON/ to turn the side menu display on. Key a color number (i.e. from 1 to 11) or select a color on the side bar to change the active color. The active color has a white rectangle beside it.
- Select submenu //MODE/ (if it is not already underlined).
- A menu prompt ***Sel element / Key color # / YN mode on*** will appear near the top of the screen.
- Press the Y/N button on the mouse and the mode will be turned on. This means that all elements created from this point on will have the active color automatically added to them.
- Since the mode is now turned on, the menu prompt will now change to read ***Sel element / Key color # / YN mode off***.
- Press the Y/N button on the mouse and the mode will be turned off. This means that all elements created from this point on will have the default color.

TO TURN THE SIDE MENU ON OR OFF, FOLLOW THESE STEPS:

- SELECT FKey TYPE (if you are not already there)
- SELECT SubMenu / COLOR / (if it is not already underlined)
- The color submenu will appear at the bottom of the screen.
- Select submenu /SIDE ON/ to turn the side menu display on. Key a color number (i.e. from 1 to 11) or select a color on the side bar to change the active color. The active color has a white rectangle beside it.

- Select submenu /SIDE OFF/ to turn the side menu display off.

TO DISPLAY ALL ELEMENTS THAT HAVE THE ACTIVE COLOR, FOLLOW THESE STEPS:

- SELECT FKey TYPE (if you are not already there)
- SELECT SubMenu / COLOR / (if it is not already underlined)
- The color submenu will appear at the bottom of the screen.
- (OPTIONAL) Select submenu /SIDE ON/ to turn the side menu display on. Key a color number (i.e. from 1 to 11) or select a color on the side bar to change the active color. The active color has a white rectangle beside it.
- Select submenu /SHOW/ and all elements that have the active color will be displayed. All other elements will be temporarily no shown.

NOTE: Select submenu /RESET/ to redisplay all elements.

CHAPTER 20

FKey SHOW

/ SHO / NO SHO / ERASE / PACK / ERS PTS / SHO DIM / NO SHO DIM / ERS DIM /

Figure 1 Menu Item Tree for FKey SHOW

FKey SHOW allows you to turn the display of elements on or off, erase elements and compress data in computer memory to make room for more information.

FUNCTION KEY SHOW SUBMENU OPTIONS:

- **/SHO/**
  - Toggles between the SHOW and the NO SHOW worlds each time /SHO/ is selected.
  - Shows selected elements (i.e. moves them from the NO SHOW world into the SHOW world).
  - Shows all elements (i.e. moves all elements in all views in the NO SHOW world into their respective views in the SHOW world)
- **/NO SHO/** To no show elements or a group of elements (i.e. move them from the SHOW world into the NO SHOW world)
- **/ERASE/** To erase individual elements or a group of elements
- **/PACK/** To pack the Micro CADAM drawing to recover unused memory
- **/ERS PTS/** To erase all points in the current view, or a group of points

·	**/SHO DIM/**	To show dimensions (i.e. move them back from the opposite world (i.e. SHOW or NO SHOW world))
·	**/NO SHO DIM/**	To no show dimensions (i.e. move them into the opposite world (i.e. SHOW or NO SHOW world)
·	**/ERS DIM/**	· To erase all dimensions in the active view. · To erase all annotation in the active view. · To erase all dimensions and annotation in all views.

Specific information on the submenu options are listed with page numbers as follows:

FUNCTION KEY SHOW		
SHOW ITEM	DESCRIPTION	PAGE NO.
SubMenu /SHO/ & /NO SHO/	Information of FKey / SHOW / submenu / SHO / & / NO SHO /	20-5
SubMenu /ERASE/	Information of FKey / SHOW / submenu / ERASE /	20-13
SubMenu /PACK/	Information of FKey / SHOW / submenu / PACK /	20-15
SubMenu /ERS PTS/, /SHO DIM/, /NO SHO DIM/ & /ERS DIM/	Information of FKey / SHOW / submenu / ERS PTS /, / SHO DIM /, / NO SHO DIM / & / ERS DIM /	20-19

FKey SHOW

SUBMENU / SHO /

AND

SUBMENU / NO SHO /

Micro CADAM has two parallel worlds in which geometry can be created, edited and erased, and moved from one world to the other world. These two parallel worlds are called the SHOW world and the NO SHOW world.

The parallel SHOW and NO SHOW worlds are shown in the diagram in Figure 2 on page 20-6.

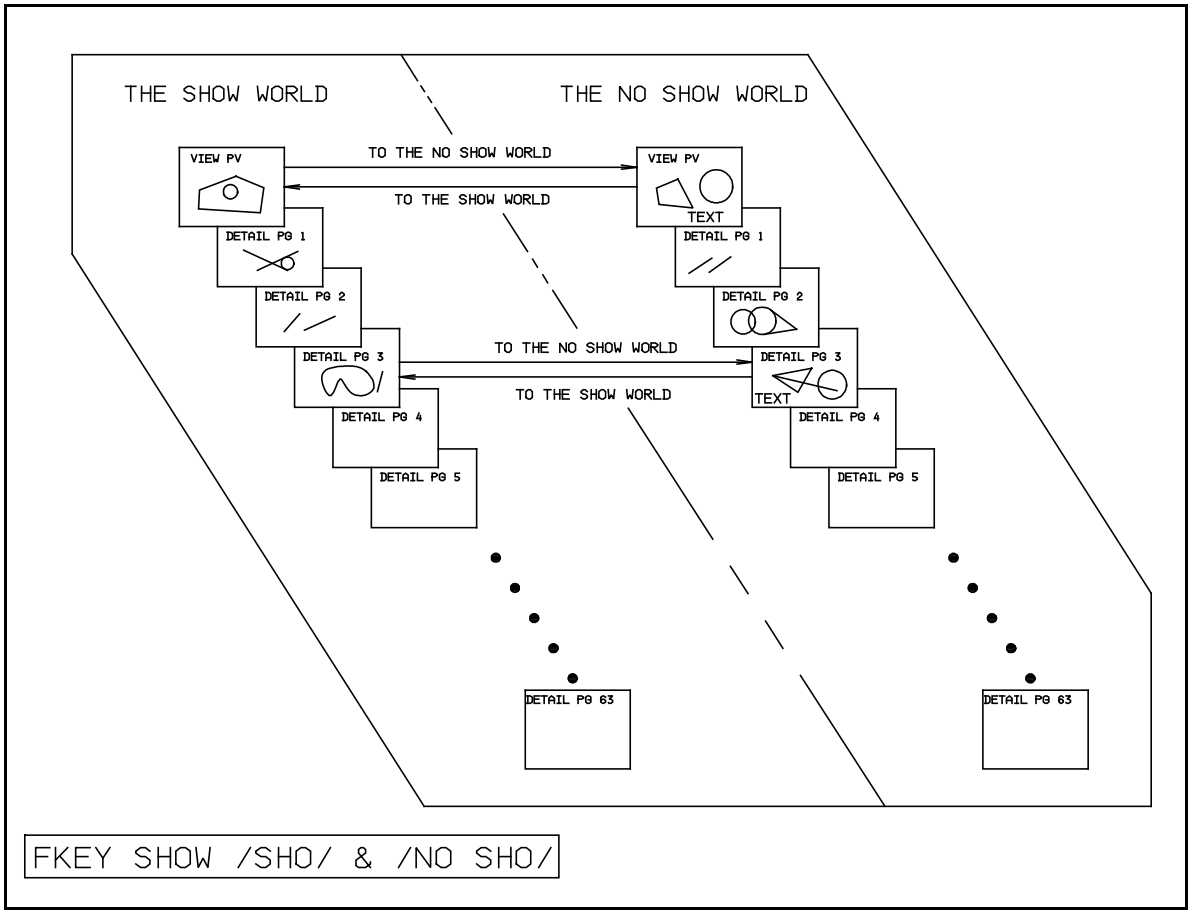

Figure 2 A drawing illustrating the relationship of the SHOW and NO SHOW worlds.

Here are some highlights of the SHOW and NO SHOW worlds:

- FKey SHOW submenu /SHO/ toggles between the SHOW and NO SHOW worlds each time it is selected.

- Elements can be created in the SHOW world, moved into the NO SHOW world,

edited and then moved back into the SHOW world.

- Elements can be created in the NO SHOW world, moved into the SHOW world, edited and then moved back into the NO SHOW world.

- Elements can be moved between the SHOW and NO SHOW worlds by selecting individual elements, or by using the group function to move all the elements in a group.

- All auxiliary views and detail pages are available in both the SHOW and NO SHOW worlds.

- Note that geometry can exist in both the SHOW and the NO SHOW worlds at the same time.

- Use FKey WINDOW in the SHOW and the NO SHOW world to see all of the geometry.

- NO SHOW elements do not plot.

Common SHOW and NO SHOW operations are listed in the following chart with page numbers on which detailed information can be found:

COMMON SHOW AND NO SHOW OPERATIONS		
ITEM NO.	DESCRIPTION	PAGE NO.
1	TO TOGGLE BETWEEN THE SHOW WORLD AND THE NO SHOW WORLD	20-8
2	TO MOVE SELECTED ELEMENTS FROM THE SHOW WORLD TO THE NO SHOW WORLD	20-8
3	TO MOVE A GROUP OF ELEMENTS FROM THE SHOW WORLD TO THE NO SHOW WORLD	20-9
4	TO MOVE SELECTED ELEMENTS FROM THE NO SHOW WORLD TO THE SHOW WORLD	20-9
5	TO MOVE ALL ELEMENTS FROM THE NO SHOW WORLD TO THE SHOW WORLD	20-10

1) TO TOGGLE BETWEEN THE SHOW WORLD AND THE NO SHOW WORLD:

- SELECT FKey SHOW
- SELECT submenu /SHO/
- The opposite world will appear each time submenu /SHO/ is selected (i.e. if the SHOW world is visible, the NO SHOW world will appear; if the NO SHOW world is visible, the SHOW world will appear)

2) TO MOVE SELECTED ELEMENTS FROM THE SHOW WORLD TO THE NO SHOW WORLD:

- SELECT FKey SHOW
- SELECT submenu /NO SHO/
- The menu prompt ***Sel any element*** appears near the top of the display screen.
- Select an element and that element becomes no shown (i.e. moved to the NO SHOW world)
- The menu prompt near the top of the display screen now changes to read ***Sel any element / YN reshow element***.

- Continue selecting elements, or press the Y/N button on the mouse to reshow the element just no shown.

3) TO MOVE A GROUP OF ELEMENTS FROM THE SHOW WORLD TO THE NO SHOW WORLD:

- Form a group of elements before selecting FKey SHOW (use FKey GROUP or group by color)
- SELECT FKey SHOW
- SELECT submenu /NO SHO/
- The menu prompt ***Sel any element / YN no show group*** appears near the top of the display screen (Note that the group option only appears if you have a temporary group formed when you first access FKey SHOW /NO SHO/).
- Press the Y/N button on the mouse and the group is moved to the NO SHOW world.

HINT: If you assign a color to those elements that are in a congested area, and you want to edit them frequently, you can group them by color (see FKey TYPE) and then move the entire group to the NO SHOW world for editing. When the editing is finished you can easily return all NO SHOW elements to the SHOW world (see item 5 on page 20-10).

4) TO MOVE SELECTED ELEMENTS FROM THE NO SHOW WORLD TO THE SHOW WORLD:

- SELECT FKey SHOW
- SELECT submenu /SHO/
- The NO SHOW world appears.

- The menu prompt ***Sel menu / YN show all / Sel any element*** appears near the top of the display screen.

- Select an element on the screen. The element is highlighted (i.e. turns green) and the menu prompt ***Sel element / YN end*** appears near the top of the screen.

- Select all elements required and then press the Y/N button on the mouse.

- All selected elements are returned to the SHOW world.

5) TO MOVE ALL ELEMENTS FROM THE NO SHOW WORLD TO THE SHOW WORLD:

- SELECT FKey SHOW

- SELECT submenu /SHO/

- The NO SHOW world appears.

- The menu prompt ***Sel menu / YN show all / Sel any element*** appears near the top of the display screen.

- Press the Y/N button on the mouse and all elements in the NO SHOW world will be moved to the SHOW world.

The NO SHOW option can be used in the following situations:

- You do not want an element visible on your front page because it is getting in the way of new geometry you are constructing. NO SHOW it so it moves into the NO SHOW world and is no longer on the display in the SHOW world. To return it to the SHOW world, select FKey SHOW and submenu /SHO/; the NO SHOW world will now appear. Select the element and press the Y/N button on the mouse to finish selecting elements and return them to the SHOW world.

- You are working on your front page and the drawing is very congested with many elements. You want to edit some of these elements without being distracted by all the other elements. Select FKey SHOW and submenu /NO SHO/ and move

the elements you want to work on into the NO SHOW world. Then access the NO SHOW world by selecting submenu /SHO/. You will now see only the elements in the NO SHOW world. Edit them (as well as creating new elements) and when you are finished return them to the SHOW world by pressing the Y/N button on the mouse when asked ***YN show all***.

The SHOW and NO SHOW worlds are very useful, but you should be aware of the following situations:

- All elements in the NO SHOW world are included in the total word count. If you are reaching a model full condition be sure to access the NO SHOW world and erase any elements that are not needed.

- Be sure that you do not move elements to the NO SHOW world, and then forget that they are there. This can cause problems later on when all geometry is returned to the SHOW world with the ***YN show all*** command. All of the NO SHOW elements (including the ones you have forgotten about) are returned to the SHOW world; you may not have noticed that the forgotten elements have also been returned to the SHOW world, and those elements could possible cause problems on your drawing.

FKey SHOW

SUBMENU / ERASE /

FKey SHOW submenu /ERASE/ is used to erase elements. Those elements erased are removed permanently from the drawing.

When FKey SHOW is first selected, SubMenu /ERASE/ is the default option. The menu prompt ***Sel any element*** appears near the top of the screen.

When an element is selected it disappears from the display screen and the menu prompt changes to read ***Sel any element / YN restore element***. If you press the Y/N button on your mouse at this time, the element just erased will be restored. This is one level of undo. Should you select a second element instead of pressing the Y/N button on the mouse, the first element is permanently erased from the model.

Since Micro CADAM has a finite model size, it is important to keep erasing unused elements.

Remember to check the NO SHOW world and detail pages for elements that can be erased to save model space.

FKey SHOW

SUBMENU / PACK /

FKey SHOW SubMenu /PACK/ is used to pack a Micro CADAM model. Packing a model compresses the electronic data and can provide more free space to continue drawing. Figure 3 on page 20-16 shows the memory map of a Micro CADAM model as it proceeds from a blank model to a model full condition.

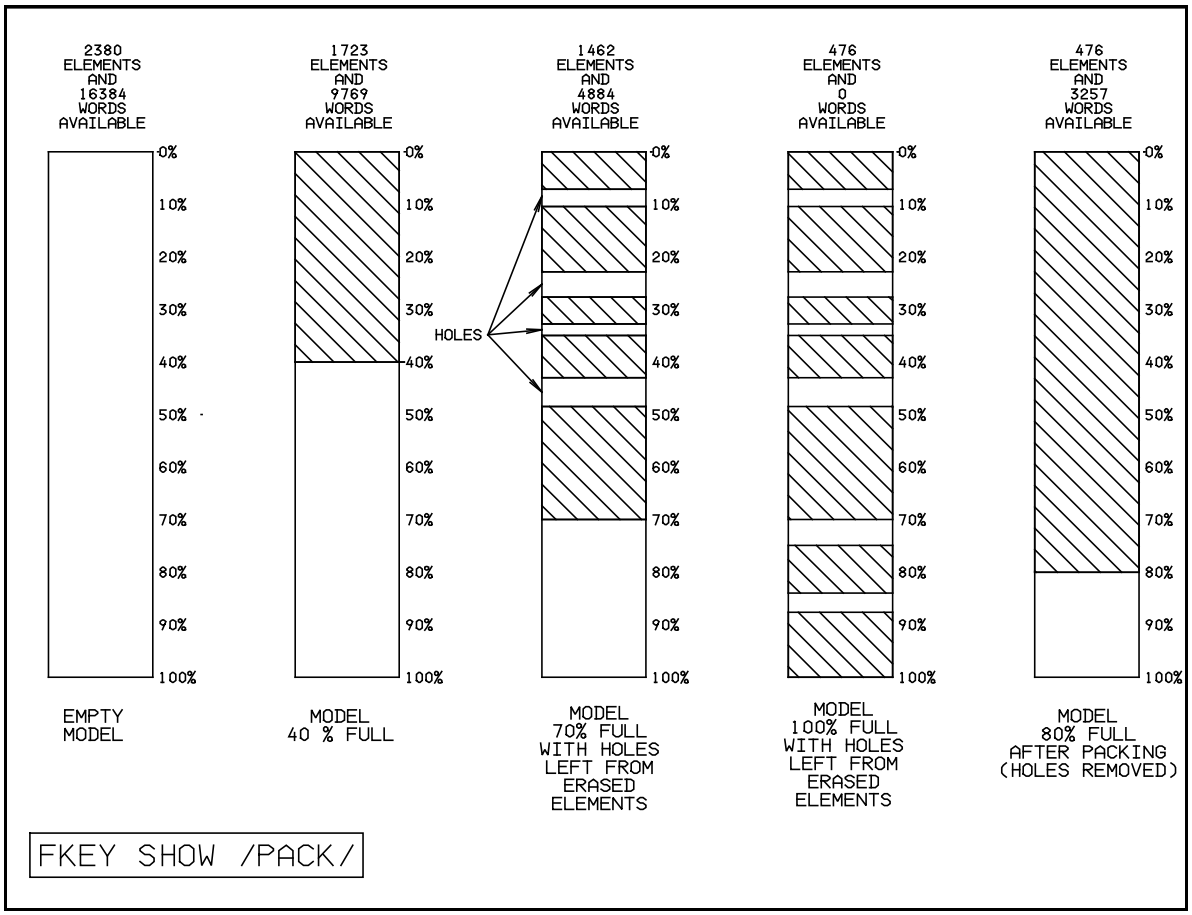

Figure 3 An example showing how pack recovers model space.

The first rectangle in Figure 3 on page 20-16 shows a blank Micro CADAM drawing. It can hold 2,380 elements or 16,384 words before it is full. There must be both elements and words remaining in the model in order to keep drawing. If either the number of elements or the number of words reaches zero, the message ***model full*** will be displayed at the top of the display screen.

The second rectangle shows a Micro CADAM drawing that is 40% full. There are 1,723 elements and 9,769 words available in the model (i.e. 1,723 additional elements, or 9,769 words can be added before a model full condition results). In this model geometry has been created

and nothing has been erased.

The third rectangle shows a Micro CADAM drawing that is 70% full. Elements have been erased from this model and 'holes' (or unused areas) have been left throughout the model. There are 1,462 elements and 4,884 words available in the model.

The fourth rectangle shows a Micro CADAM drawing that is 100% full. A model full condition is present and the message ***model full*** is displayed near the top of the display screen. There are 476 elements and 0 words available so no further information can be added to this model.

The fifth rectangle shows the same Micro CADAM drawing as rectangle 4 except that FKey SHOW SubMenu /PACK/ has been selected. The message ***pack done*** appears near the top of the display screen. All the holes have been removed from the model and computer data has been compressed. The result is that the model is now 80% full. There are 476 elements and 3,257 words available for use.

Pack is automatically executed as soon as it is selected.

It is good practice to periodically erase unused points and elements from auxiliary views and detail pages.

FKey SHOW

SUBMENU / ERS PTS /

SUBMENU / SHO DIM /

SUBMENU / NO SHO DIM /

SUBMENU / ERS DIM /

SUBMENU / ERS PTS /:

FKey SHOW SubMenu / ERS PTS / will erase all points in the active view, or all points in a temporary group. This is a good option to run periodically as it will enhance readability of the drawing on the computer screen, and permit you to pack your drawing to recover model space.

Should you have a few points that you do not want to be erased you can do any of the following:

- Change the point to an NC point. Use FKey TYPE and SubMenu /NC/ and select the points you want to keep. These point will become NC points and will not be erased with the /ERS PTS/ option. These NC points can be erased like normal elements by using FKey SHOW and SubMenu /ERASE/.

- Move the points you want to keep into the NO SHOW world prior to erasing all points, and the move it back into the SHOW world after point erasure. Use FKey SHOW and SubMenu /NO SHO/ to do this.

Remember that points can be created at the definition points of elements by selecting FKey POINT and SubMenu /DEF PTS/. You can also create a group prior to selecting /DEF PTS/ and all elements in the group will have their definition points created.

Two common operations involving /ERS PTS/ follow:

1) TO ERASE ALL POINTS IN THE ACTIVE VIEW:

- SELECT FKey SHOW

- SELECT SubMenu /ERS PTS/

- A menu prompt ***YN erase points*** appears near the top of the display screen.

- Press the Y/N button on the mouse and all points will be erased. A message ***Points erased*** will appear near the top of the display screen. It is good practice to select SubMenu /PACK/ after this and pack the drawing.

2) TO ERASE ALL POINTS IN A GROUP:

- Form a group by using FKey GROUP, or group by color.

- SELECT FKey SHOW

- SELECT SubMenu /ERS PTS/

- A menu prompt ***YN erase points in group*** appears near the top of the display screen.

- Press the Y/N button on the mouse and all points will be erased. A message ***Group points erased*** will appear near the top of the display screen. It is good practice to select SubMenu /PACK/ after this and pack the drawing.

SUBMENU / SHO DIM / AND / NO SHO DIM /:

FKey SHOW SubMenu / NO SHO DIM / will no sho all dimensions in the active view. These dimensions are moved into the NO SHOW world. This can be used in a situation where you want to look at geometry only, and the dimensions are getting in the way.

The dimensions can be reshown again by selecting SubMenu /SHO DIM/.

SUBMENU / ERS DIM /:

FKey SHOW SubMenu / ERS DIM / allows you to three different things:

- Erase all dimensions in the active view.
- Erase all annotation in the active view.
- Ease all dimensions and annotation in all views.

The three operations must be accessed in the order listed above.

Instructions for using this option are listed below:

TO ERASE ALL DIMENSIONS IN THE ACTIVE VIEW:

- SELECT FKey SHOW
- SELECT SubMenu / ERS PTS /
- A menu prompt ***YN erase group dimensions*** appears near the top of the display screen.
- Press the Y/N button on your mouse and all dimensions in the active view are erased.
- The operation continues in the next section below:

TO ERASE ALL ANNOTATION IN THE ACTIVE VIEW:

- The menu prompt changes to read ***YN erase all annotation***.
- Press the Y/N button on your mouse and all annotation (i.e. notes, etc.) are erased in the active view.
- The operation continues in the next section below:

TO ERASE ALL DIMENSIONS AND ANNOTATION IN ALL VIEWS:

- The menu prompt changes to read ***YN erase dimensions in all views***.
- Press the Y/N button on your mouse and all dimensions and annotation in all views is erased.

This is a fast way to clean up your drawing should you wish to have only geometry.

CHAPTER 21

FKey ELEC

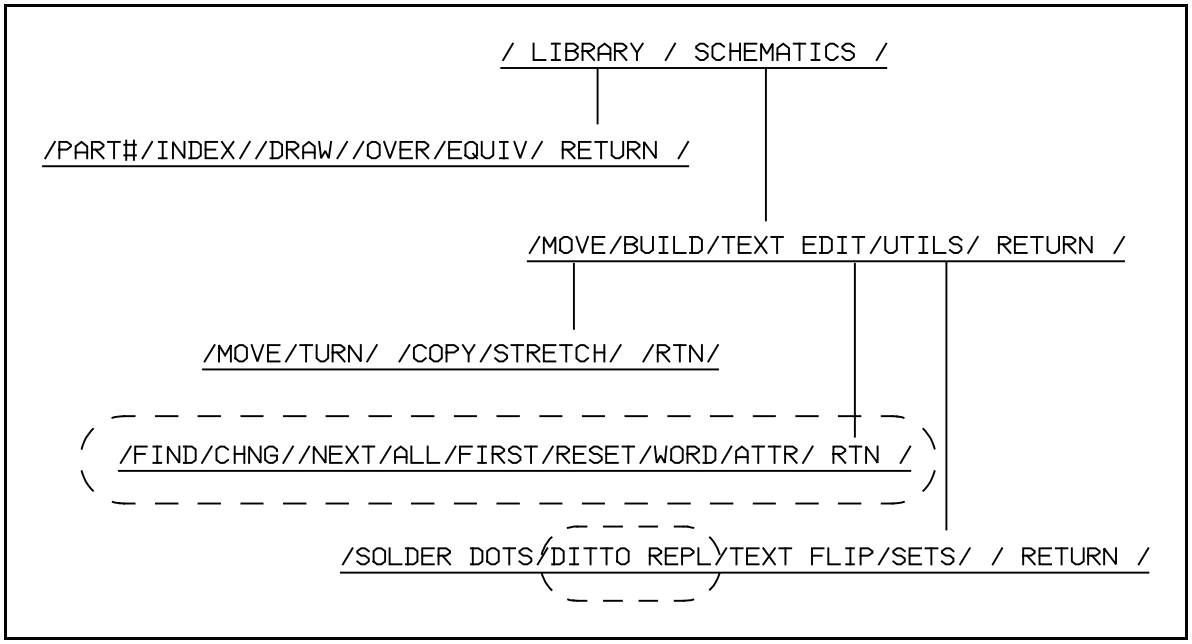

Figure 1 - Menu Item Tree for FKey ELECT

FKey ELEC is used in conjunction with other MICRO CADAM functions to create schematics and other drawings in which you want to associate data with specific components. Submenu /LIBRARY/ accesses standard electrical components in the ELECTRICAL schematic libraries. These libraries are available at extra cost directly from a MICRO CADAM VAR. Contact ALTIUM INC. for your closest VAR.

Finished drawings can be transferred to a mainframe CADAM system using the MICRO CADAM Data Transfer, and processed using CADEX.

In this book we will be looking at the submenu options under FKey ELEC and submenu /SCHEMATICS/ that are applicable to general CAD work. Specifically we will be looking at the text edit and ditto replace utilities. These two utilities are shown inside the dashed lines in Figure 1 above. Please feel free to explore the other utilities yourself.

FUNCTION KEY ELEC SUBMENU OPTIONS:

- /LIBRARY/ Accesses standard electrical components in the ELECTRICAL schematic libraries. These libraries are available at extra cost directly from ALTIUM INC.

  Places standard parts or their equivalents in a drawing.

  - /INDEX/ Accesses the component libraries

    - /DRAW/ Draws a part chosen from the index, or display or alter information regarding that part.

      - //PART#/ Displays the list of parts for the current index.

      - //OVER/ Overrides the description of a part.

      - //EQUIV/ Displays a list of parts that are geometrically equivalent to a chosen part.

- /SCHEMATICS/ Accesses design functions that allow you to create and modify a component.

  - /MOVE/ Moves a component

  - /COPY/ Copies a component

  - /TURN/ Turns a component

  - /TEXT EDIT/ Searches for and replaces text

    Searches for attribute numbers and attribute text.

  - /UTILS/ Accesses utilities for modifying component geometry and schematics.

    - /SOLDER DOTS/ Adds solder dots to a schematic

    - /DITTO REPL/ Replaces a ditto with hard geometry (i.e. a use)

- /TEXT FLIP/ Flips text.
- /SETS/ Finds and corrects set errors.

- /BUILD/ Accesses design functions for creating components and modifying their properties.
  - /REFDES/ Assigns a reference designator attribute to a component
  - /PARTNO/ Assigns a part number attribute to a component.
  - /PIN/ Assigns a pin attribute to a component.
  - /PIVOT/ Assigns a pivot point to a component.
  - /ADDMEM/ Adds a member (element) to a component set.
  - /DELMEM/ Deletes a member (element) from a component set.
  - /DELSET/ Deletes a component set.
  - /DETAIL/ Transfers a component set from the primary view to a detail page.
  - /SHOW/ Shows the current component set.
  - /RESET/ Restores the display of all geometry after using /SHOW/

FKey ELEC

SUBMENU /SCHEMATICS/

/UTILS/ /DITTO REPL/

SUBMENU /SCHEMATICS/ /UTILS/ /DITTO REPL/:

FKey ELEC and submenus /SCHEMATICS/ /UTILS/ /DITTO REPL/ allows a ditto to be replaced with hard geometry. This is essentially the same as changing a ditto into a use.

To convert a ditto (or group of dittos) to hard geometry, follow these steps:

A) SELECT INDIVIDUAL DITTOS TO REPLACE WITH HARD GEOMETRY:

1. Select FKey /ELEC/ and submenus /SCHEMATICS/ /UTILS/ and /DITTO REPL/. The menu prompt ***Select ditto to replace / YN group*** appears near the top of the display screen.

2. Select a ditto. The ditto highlights (i.e. turns green). The menu prompt ***Select ditto to replace / YN convert*** appears.

3. Continue selecting dittos. Each ditto selected will highlight. If you select a highlighted ditto it will become dehighlighted. When you are finished selecting the dittos, press the Y/N button on the mouse. The menu prompt ***Select ditto to replace / YN restore*** appears.

4. If you decide you want the replaced dittos to be converted back to dittos, press the Y/N button on the mouse. You may also select another ditto and repeat the process.

B) REPLACE ALL DITTOS IN A GROUP WITH HARD GEOMETRY:

1. Prior to beginning this process, change to FKey GROUP /TRAP/ and create a temporary group of the dittos you want to replace. (See the chapter GROUP for more information).

2. Then select FKey /ELEC/ and submenus /SCHEMATICS/ /UTILS/ and /DITTO REPL/. The menu prompt ***Select ditto to replace / YN group*** appears near the top of the display screen.

3. Press the Y/N button on the mouse. The temporary group highlights (i.e. turns green). The menu prompt ***Select ditto to replace / YN convert*** appears.

4. Press the Y/N button on the mouse. All dittos in the group are replaced with hard geometry (i.e a use). The menu prompt ***Select ditto to replace / YN restore*** appears.

5. If you decide you want the replaced dittos to be converted back to dittos, press the Y/N button on the mouse. You may also select another ditto and repeat the process.

FKey ELEC

SUBMENU /SCHEMATICS/ /TEXT EDIT/

SUBMENU /SCHEMATICS/ /TEXT EDIT/:

FKey ELEC and submenus /SCHEMATICS/ /TEXT EDIT/ allows you to find text anywhere in your drawing, and optionally change the found text. Attributes can also be found (but not changed).

When you first access FKey ELEC and submenu /SCHEMATICS/ /TEXT EDIT/ the following submenu appears near the bottom of the screen:

/FIND/CHNG/ /NEXT/ ALL/FIRST/RESET/ WORD/ ATTR/ /RTN/

Notice that there is a space immediately to the left of the submenu items **ALL, WORD** and **ATTR**. This allows room for an asterisk should the item be selected. For example, lets say that you select the submenu item **WORD**. The submenu at the bottom of the screen would now appear as:

/FIND/CHNG/ /NEXT/ ALL/FIRST/RESET/*WORD/ ATTR/ /RTN/

Notice the asterisk beside the submenu item **WORD**. Think of this asterisk as a tiny indicator light. Whenever it is present, that submenu item is active.

These three submenu items are defined as follows:

- **/ ALL/** A single occurrence of the find text string is displayed.
- **/*ALL/** All occurrences of the find text string are displayed.

- **/ WORD/** The find text string can match a character sequence anywhere in word.
- **/*WORD/** The find text string must match an entire word.

- **/ ATTR/** Only regular text is checked for the find text string.
- **/*ATTR/** Only attribute text is checked for the find text string.

These submenu items can be used together in any combination.

The other submenu items have the following definitions:

- **/ FIND/** Finds occurrences of the find text string in either text or attribute data.
- **/ CHNG/** Finds occurrences of the find text string in existing text and replaces it with a change-to-string.

  Finds occurrences of the find text string in existing attribute data.
- **/ NEXT/** Highlights the next occurrence of the find text string.
- **/ FIRST/** Returns to the first occurrence of the find text string
- **/ RESET/** Cancels all settings and returns to the top of the submenu structure.
- **/ RTN/** Climbs to the previous level in the submenu structure.

Let's say you have a drawing with the note "right hand thread" in several places throughout the drawing. You make a decision to use left hand threaded bolts instead of right hand threaded bolts and now want to first find the original text "right hand thread", and then change this text to read "left hand thread" throughout the drawing.

To find the text "right" throughout the drawing, follow these steps:

A) FIND A TEXT STRING:

1. Select FKey ELEC and submenu /SCHEMATICS/ /TEXT EDIT/ /FIND/. The menu prompt ***Key find text string*** appears near the top of the display screen. The message ***Find-str = UNDEFINED*** also appears near the top of the screen.

2. Toggle the settings for **/ ALL/**, **/ WORD/** and **/ ATTR/** as necessary. In this situation you decide to set the WORD submenu item to read **/*WORD/** in order search for the word "right".

3. Key in the word "right". The information at the top of the screen appears as follows:

Text in note/dim	**Key find text string**
Match#1 #Matchs=8	**Find-str="right"**

This information line tells you that the first match has been found (Match#1), there are a total of 8 matches (#Matchs=8), and the find string is "right" (Find-str="right"). The first occurrence of the find text string is highlighted (i.e. it turns green) and is positioned in the middle of the display screen.

4. Select the submenu item /NEXT/. The Match#1 changes to Match#2. The second occurrence of the find text string is highlighted (i.e. it turns green) and is positioned in the middle of the display screen. Keep selecting /NEXT/ to find the other occurrences of the text find string.

   a. Should you want, select submenu item /FIRST/ and return to the first occurrence of the text find string.

   b. Should you want, select submenu item /ALL/ and all occurrences of the text find string will be highlighted and displayed.

   c. Should you want, select submenu /RESET/ to reset all menus and abort the find procedure.

5. The find procedure is now complete.

To find the text "right" throughout the drawing, and change it to "left" follow these steps:

B) CHANGE A TEXT STRING:

1. Select FKey ELEC and submenu /SCHEMATICS/ /TEXT EDIT/ /CHNG/. The information at the top of the screen appears as follows:

Key find text string
Find-str=UNDEFINED Chng-str=UNDEFINED

2. Toggle the settings for **/ ALL/**, **/ WORD/** and **/ ATTR/** as necessary. In this situation you decide to set the WORD submenu item to read **/*WORD/** in order search for the word "right".

3. Key in the word "right". The information at the top of the screen appears as follows:

Text in note/dim Key change-to text string
Match#1 #Matchs=8 Find-str="right" Chng-str=UNDEFINED

This information line tells you that the first match has been found (Match#1), there are a total of 8 matches (#Matchs=8), and the find string is "right" (Find-str="right") and the change to string is undefined (Chng-str=UNDEFINED).

4. Key in the word "left". The first match is changed from "right" to "left". The information at the top of the screen appears as follows:

Change completed YN restore
Match#1 #Matchs=7 Find-str="right" Chng-str="left"

This information line tells you that the first change has been completed (Change completed), there are a total of 7 matches remaining (#Matchs=7), the find string is "right" (Find-str="right") and the change to string is "left" (Chng-str="left").

5. Select the submenu item /NEXT/. The information at the top of the screen appears as follows:

Text in note/dim Key chng-to txt str / YN use same chng-to str
Match#1 #Matchs=7 Find-str="right" Chng-str="left"

This information gives you the option of keying in a different change-to text string, or pressing the Y/N button on the mouse to use the same change to string.

6. Press the Y/N button on the mouse to change the next occurrence of the find string.

7. Should you want, you may also select the submenu item /ALL/ to change all occurrences of the find string, without selecting /NEXT/ each time.

8. Select submenu item /ALL/. The information at the top of the screen appears as follows:

Key chng-to txt str / Sel match / YN use same chng-to str
Match#1 #Matchs=6 Find-str="right" Chng-str="left"

9. Press the Y/N button on the mouse and all occurrences of the find string "right" are changed to the change string "left". The information at the top of the screen appears as follows:

 # changed = 6 YN restore
#Matchs=6 Find-str="right" Chng-str="left"

10. The change procedure is now complete.

CHAPTER 22

FKey NOTE

```
/NOTE/GEN NOTE/CHG/DISP/PARMS/POSN//NO-SPEC/SPEC//LH/CTR/RH/FILL/
                                  |
                                  /X-LT/LT/HZ-CTR/RT/X-RT//X-BT/BT/VT-CTR/TP/X-TP//LH/CTR/RH/FILL/ /RTN/
                        |
                        /SCL/NO-SCL/ /TRN/NO-TRN/ /STD/SPN/SLNT/CWID/VSP/HSP/CHT/ /RTN/
                  |
                  /NO SHO/BOX/DRAW/ /RTN/
            |
            /EDIT/MOVE/SIZE/ANGLE/SMALL/LARGE/JUST/FIT//NO-SPEC/SPEC/ /RTN/
```

Figure 1 Menu Item Tree for FKey NOTE

FKey NOTE allows you to add notes (i.e. text) to your drawing. There is one font that can be modified and adapted for your use in the following ways:

- Note size changed
- Note angle changed
- Two default sizes, small and large available (set using the MCOPT utility)
- Notes can be scaled or not scaled with window size
- Notes can be turned or not turned with window turn
- Notes can be boxed to speed up the screen display
- Notes can be no shown
- Notes can be aligned with their definition points in many different ways
- Multiline notes can be left, right or center justified
- Notes can be filled (i.e. shortest line expanded to fit the longest line)
- Notes can be fitted between two points or two lines
- The span for a note can be adjusted
- The slant of a note can be adjusted
- The character width of a note can be adjusted
- The vertical spacing of a note can be adjusted
- The horizontal spacing of a note can be adjusted
- The character height of a note can be adjusted
- Notes can be edited and changed by inserting, deleting and overwriting characters
- Notes can be stacked in vertical columns with predefined spacing
- Extended characters (i.e. ALT key combination on the numeric keypad) used

Notes can also be added to dimensions (FKey DIM /TXT/) and can be combined with arrows (FKey SYMBOL /ARW/) (Changes to NOTE parameters do not affect DIM /TXT/ notes).

FUNCTION KEY NOTE SUBMENU OPTIONS:

- /NOTE/ To add a note to a drawing

- /GEN NOTE/ To add a stacked vertical column of notes to a drawing

- /CHG/ To edit, move, change the size or angle of an existing note
  Note: /LH/, /CTR/, /RH/ and /FILL/ are also available for /GEN NOTE/

  - /EDIT/ To edit a note or to replace a note with a copy of another note

  - /MOVE/ To move a note to a new position

  - /SIZE/ To change the size of a note

  - /ANGLE/ To change the angle of a note

  - /SMALL/ To convert a non standard note size to the CADAM standard small size

  - /LARGE/ To convert a non standard note size to the CADAM standard large size

  - /JUST/ To rejustify an existing note

  - /FIT/ To adjust a note to fit between two points or two lines
    To adjust a note to be the same length as a defined line or to fit within a defined distance

  - //NO-SPEC/ To create a note using the standard MICRO CADAM character set. (Create Japanese, Greek, Russian, etc. notes).

  - //SPEC/ To create a note using optional character sets (purchased separately)

  - /RTN/ To return to the next highest menu level

- /DISP/ To change the way notes are displayed

  - /NO SHO/ To no show all existing notes. These notes are moved to

the NO SHOW world. They can be reshown by selecting the /DRAW/ option, or by using FKey SHOW

- /BOX/ Replaces all notes with boxes representative of their size and position. This can minimize display time for those drawings that have a lot of text on them.

- /DRAW/ Redraws (i.e. redisplays) all notes that have been boxed or no shown.

- /PARMS/ To change the note parameters

  - /SCL/ To allow notes to scale as the window size changes

  - /NO SCL/ To keep the note scale constant as the window size changes (i.e. to keep them the same size)

  - /TRN/ To change the note angle as the window changes its angle

  - /NO-TURN/ To keep the note angle constant as the window changes its angle

  - /STD/ To reset note size, angle, justification, and position parameters to standard values

  - /SPN/ To change the length used to justify notes. This affects modifier menu options //LH/, //CTR/, //RH/, //FILL/, and //POSN/, which use a note's longest line for calculating justification.

  - /SLNT/ To slant the angle at which the letters are written (i.e. to italicize them)

  - /CWID/ To change the width of each character

  - /VSP/ To change the vertical spacing between notes

  - /HSP/ To change the horizontal spacing between characters

  - /CHT/ To change the character height without changing other note parameters. (Note that the size option for note changes the note

size and all other note parameters in proportion to size)

- /RTN/ Return to the next highest menu level

- /POSN/ To adjust the way notes line up around their pivot points (Pivot points are defined later in this chapter).

THE FOLLOWING PARAMETERS DEFINE THE HORIZONTAL POSITION OF NOTES (See Figure 6 on page 22-16).

- /X-LT/ Places the extreme left edge of the leftmost character of the note at the pivot point for the note (i.e. extreme left position)

- /LT/ Places the center of the leftmost character of the note at the pivot point for the note (i.e. left position)

- /HZ-CTR/ Places the center of the longest line in the note at the pivot point for the note (i.e. horizontal center)

- /RT/ Places the center of the rightmost character in the note at the pivot point for the note (i.e. right position)

- /X-RT/ Places the right edge of the rightmost character in the note at the reference point (i.e. extreme right position)

THE FOLLOWING PARAMETERS DEFINE THE VERTICAL POSITION OF NOTES (See Figure 6 on page 22-16).

- /X-BT/ Places the bottom edge of the bottom line at the pivot point for the note (i.e. extreme bottom position)

- /BT/ Places the center of the character in the bottom line at the pivot point for the note (i.e. bottom position)

- /VR-CTR/ Places the midpoint halfway between the top and bottom lines at the pivot point for the note (i.e. vertical center position)

- /TP/ Places the center character in the top line at the pivot point for the note (i.e. top position)

- /X-TP/ Places the top edge of the top line at the pivot point for the note (i.e. extreme top position)

THE FOLLOWING PARAMETERS DEFINE THE JUSTIFICATION OF MULTILINE NOTES (Multiline notes are notes containing more than one line of text).

- /LT/ Vertically aligns a note along the left side (i.e. flush left)
- /CTR/ Vertically aligns the midpoint of each line (i.e. centered)
- /RH/ Vertically aligns a note along the right side (i.e. flush right)
- /FILL/ Stretches the shorter lines to match the length of the longest line
- /RTN/ Return to the next highest menu level

- /NO-SPEC/ To create a note using the standard MICRO CADAM character set.
- /SPEC/ To create a note using optional character sets (purchased separately) (e.g. Japanese, Korean, Russian, Greek, etc).
- /LT/ Vertically aligns a note along the left side (i.e. flush left)
- /CTR/ Vertically aligns the midpoint of each line (i.e. centered)
- /RH/ Vertically aligns a note along the right side (i.e. flush right)
- /FILL/ Stretches the shorter lines to match the length of the longest line

Specific information on the submenu options for FKey NOTE are listed with page numbers as follows:

FKey NOTE			
FKEY NOTE SUBMENU ITEM	ITEM NUMBER	DESCRIPTION	PAGE NO.
/NOTE/	1	SPECIAL CHARACTERS FOR FKEY NOTE	22-11
	2	EXTENDED CHARACTERS FOR FKEY NOTE	22-13
/POSN/	3	NOTE ALIGNMENT POSITIONS (FKey NOTE submenu /POSN/)	22-16
	4	NOTE JUSTIFICATION (FKey NOTE submenu /POSN/)	22-17
/PARMS/	5	NOTE CHARACTER WIDTH, VERTICAL SPACING, HORIZONTAL SPACING, AND CHARACTER HEIGHT (FKey NOTE submenu /PARMS/ (/CWID/ /VSP/ /HSP/ /CHT/))	22-20
	6	NOTE CHARACTER WIDTH WITH RATIO OPTION, (FKey NOTE submenu /PARMS/ /CWID/)	22-21
	7	NOTE CHARACTER TO CHARACTER SPACING WITH RATIO OPTION, (FKey NOTE submenu /PARMS/ /HSP/)	22-22
	8	NOTE VERTICAL LINE TO LINE SPACING WITH RATIO OPTION	22-23
	9	NOTE CHARACTER WIDTH, AND CHARACTER HEIGHT SPECIAL OPTIONS	22-24
	10	NOTE HORIZONTAL SPACING SPECIAL OPTIONS	22-25
	11	NOTE VERTICAL SPACING SPECIAL OPTIONS	22-26
	12	NOTE SLANT (FKey NOTE submenu /PARMS/ /SLNT/)	22-27
	13	NOTE SPAN (FKey NOTE submenu /PARMS/ /SPN/)	22-28
/GEN NOTE/	14	GENERAL NOTE OPTION (FKey NOTE submenu /GEN NOTE/	22-30
/CHG/	15	EDIT AN EXISTING NOTE	22-32
	16	MOVE AN EXISTING NOTE	22-33
	17	RESIZE AN EXISTING NOTE	22-33
	18	CHANGE THE ANGLE OF AN EXISTING NOTE	22-34
	19	CHANGE THE SIZE OF AN EXISTING NOTE TO CADAM STANDARD SMALL SIZE	22-34
	20	CHANGE THE SIZE OF AN EXISTING NOTE TO CADAM STANDARD LARGE SIZE	22-34
	21	TO REJUSTIFY AN EXISTING NOTE	22-34
	22	TO ADJUST AN EXISTING NOTE TO FIT TO A LENGTH	22-35

FKey NOTE

INTRODUCTION

Micro CADAM comes with two standard note sizes. They are ***small*** size which is 0.16406 inches, and ***large*** size which is 0.24609 inches. (The default note sizes can be changed via the ***MCOPT*** program (The MICRO CADAM options configuration program is explained in Chapter 1)). MICRO CADAM notes are always plotted at an absolute size, regardless of the auxiliary view scale. This is exactly the same way you would place notes on your manual drawing on a drafting board; the notes would all be, perhaps 1/4" high, regardless of the scale of the view being annotated. The default parameters for each note are listed as follows:

- SIZE = 0.16406 (small note) or 0.24609 (large note)
- ANGLE = 0 degrees
- JUSTIFICATION = /LH/ (left hand justified)
- POSITION = /LT/ /TP/

FKey NOTE submenu /PARMS/ /STD/ reset the note parameters to these defaults.

When FKey NOTE is first selected, the menu prompt ***Sel point / Ind point / Key size, angle / YN large*** appears near the top middle of the screen and the information message ***Size = 0.16406 Angle = 0.00000*** appears near the top left of the screen. At this point you have four options:

- SELECT an existing point to start a note there
- INDICATE a position to start a note there
- KEY the note size and angle (i.e. .3125,15 for a note .3125" high and an angle of 15 degrees)
- Press the Y/N button on the mouse and the standard large size note will become the default. Each time you press the Y/N button on the mouse the standard size note will toggle between the large and small sizes.

After you have determined the size and angle of the note, you can define the starting point for the note. Select an existing point, or indicate a position. A circle will appear on the screen at the starting point for the note. You can now key the note into the "key input area" at the bottom of the screen. A single note can be up to 256 characters long. The text entry line will scroll off to the right if you enter more characters than will fit on a single line. You can use the following keyboard keys to help you enter and edit the note:

- **KEYBOARD KEYS:** You can type in the note, or type over existing characters in the note. The cursor under a character shows you the current entry position.

- **INSERT KEY:** You can press the insert key on your keyboard. The cursor under a character on the key input line will turn green to confirm that you are in insert mode. Any characters you type will be inserted before the green cursor. Each time you press the insert key on the keyboard the cursor will toggle between insert mode (green cursor) and overwrite mode (white cursor).

- **DELETE KEY:** Deletes the character above the cursor.

- **END KEY:** Moves the cursor to the end of the text.

- **HOME KEY:** Moves the cursor to the beginning of the text.

- **BACKSPACE KEY:** Deletes the character immediately to the left of the cursor.

- **LEFT AND RIGHT ARROW KEYS:** The left and right arrow keys move the cursor to the left or the right in the key input line.

Examples of different size notes are shown in Figure 2 on page 22-10. Examples of notes created at different angles are shown in Figure 3 on page 22-10.

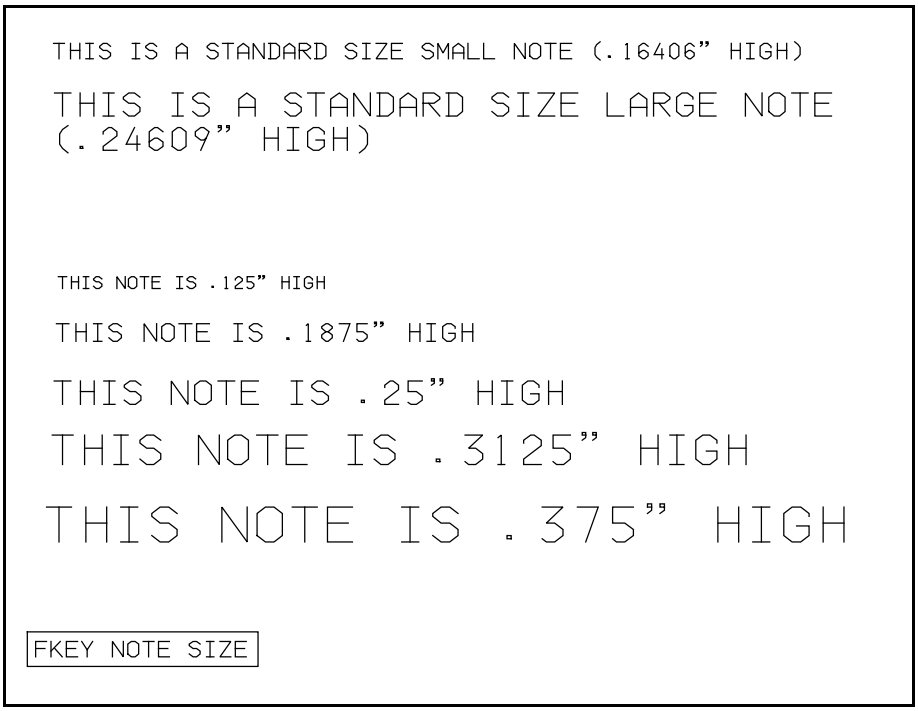

Figure 2 Examples of different note sizes

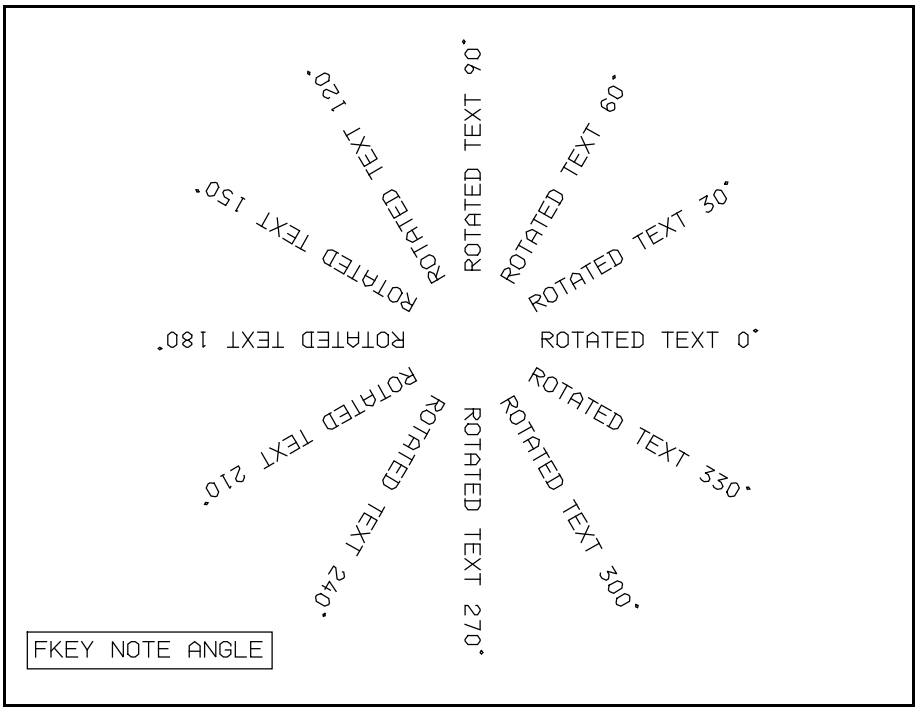

Figure 3 Examples of different note angles

1) SPECIAL CHARACTERS FOR FKEY NOTE:

The "**$**", "**!**", "\" "**[**" and "**]**" keys all have special meaning in MICRO CADAM FKey NOTE.

- The "**$**" acts like a carriage return (i.e. finish one line and start a new line). This is how multiline notes are created. Should you want to use the "**$**" character as a dollar sign, you can negate the special character property by placing a backslash in front of the dollar sign (e.g. "**$**")

- The "**!**" creates a degree character. Should you want to use the "!" character as an exclamation point you can negate the special character property by placing a backslash in front of the exclamation point (e.g. "**!**")

- The "\" negates the special properties of the "$, ! [and] characters.

- The "**[**" and "**]**" characters start and end half height characters. Should you want to use the "[" and "]" character as a square brackets you can negate the special character property by placing a backslash in front of the square brackets (e.g. "**[**"and "**]**")

Both upper and lower case characters can be used in notes by using the SHIFT and CAP LOCK keys on your keyboard.

Examples of special characters and upper and lower case characters are shown in Figure 4 on page 22-12.

```
1) THIS NOTE HAS BOTH UPPERCASE and lowercase characters

2) THE $ CHARACTER IS A CARRIAGE RETURN:
   TYPING:  THIS IS LINE #1$AND THIS IS LINE #2$AND THIS IS LINE #3
   CREATES THIS MULTILINE NOTE:     THIS IS LINE #1
                                    AND THIS IS LINE #2
                                    AND THIS IS LINE #3

3) THE ! CHARACTER CREATES A DEGREE (°) MARK:
   TYPING:  ROTATE HANDLE 15! IN CCW DIRECTION
   CREATES THIS NOTE:   ROTATE HANDLE 15° IN CCW DIRECTION

4) THE \ CHARACTER CANCELS THE SPECIAL PROPERTIES OF THE $ AND ! CHARACTERS.
   TYPING:  THE COST FOR THE XG89-4 VALVE IS \$995.95\!
   CREATES THIS NOTE:  THE COST FOR THE XG89-4 VALVE IS $995.95!

5) THE [ AND ] CHARACTERS CREATE HALF HEIGHT TEXT:
   TYPING:  NORMAL HEIGHT[THIS IS HALF HEIGHT]NORMAL HEIGHT AGAIN
   CREATES THIS NOTE:  NORMAL HEIGHTTHIS IS HALF HEIGHTNORMAL HEIGHT AGAIN

FKEY NOTE SPECIAL CHARACTERS
```

Figure 4 Examples of special note characters

2) EXTENDED CHARACTERS FOR FKEY NOTE:

There are additional characters that can be accessed in FKey NOTE by using an ALT-KEY NUMBER combination on the numeric key pad. To use this feature make sure that NUM LOCK

To use these extended characters (on keyboard on which they do not exist),
type the number above the character while holding the ALT key,
then release the ALT key. Make sure Num Lock mode is not on.
YOU MUST USE THE NUMBERS ON THE NUMERIC KEYPAD FOR THIS TO WORK.

21	128	129	130	131	132	133	134	135
#	Ç	ü	é	â	ä	à	å	ç
136	137	138	139	140	141	142	143	144
ê	ë	è	ï	î	ì	Ä	Å	É
145	146	147	148	149	150	151	152	153
æ	Æ	ô	ö	ò	û	ù	ÿ	Ö
154	155	156	157	158	159	160	161	162
Ü	¢	£	¥	₧	ƒ	á	í	ó
163	164	165	166	167	168	169	170	171
ú	ñ	Ñ	ª	º	¿	⌐	¬	½
172	173	174	175	224	225	226	227	228
¼	¡	«	»	α	ß	Γ	π	Σ
229	230	231	232	233	234	235	236	237
σ	µ	τ	Φ	Θ	Ω	δ	∞	Ø
238	239	240	241	242	243	244	245	246
ε	∩	≡	±	≥	≤	⌠	⌡	÷
247	248	249	250	251	252	253	254	
≈	°	∙	·	√	ⁿ	²	■	

FKEY NOTE EXTENDED CHARACTERS

Figure 5 Examples of extended note characters

and CAPS LOCK are both turned off. Now hold down the ALT key and type the extended character number *on the numeric key pad*. Once finished typing the number, let the alt key go and the extended character will appear on the bottom entry line. Note that you must use the numbers on the numeric key pad for this to work. A listing of extended characters that can be accessed (with their corresponding numbers above them) is provided in Figure 5 above.

FKey NOTE

SUBMENU /POSN/

MICRO CADAM has a single font that is used to place notes on the drawing, and that font can be modified and aligned in a variety of different ways. This shown as follows:

3) NOTE ALIGNMENT POSITIONS (FKey NOTE submenu /POSN/):

The most common modification made to a note is the orientation of the note about its pivot point. Figure 6 below shows the different ways that notes can be aligned with their pivot points. These

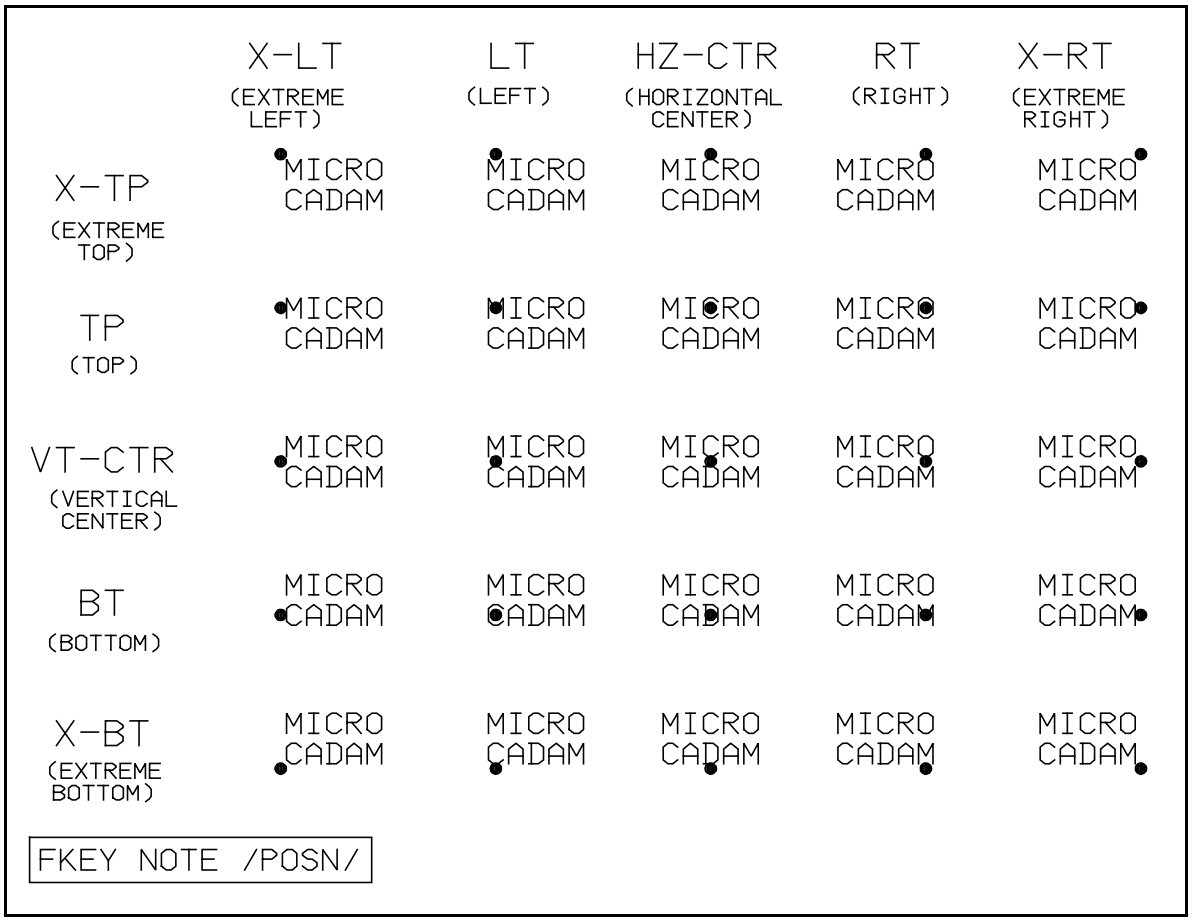

Figure 6 Different alignment positions of notes around their pivot points

alignment positions are found under FKey NOTE submenu /POSN/. Select the position you want to be active. (NOTE: To see the pivot point of an existing note, use FKey POINT and submenu /DEF PTS/.

4) NOTE JUSTIFICATION (FKey NOTE submenu /POSN/):

The second most common modification is to set the justification of multiline notes. The justification can be left justified (/LH/), center justified (/CTR/), right justified (/RH/) or fill

```
LH                          CTR                          RH
NOTE                       NOTE                       NOTE
JUSTIFICATION       JUSTIFICATION      JUSTIFICATION

T H I S   N O T E   I S   U S I N G
F I L L   J U S T I F I C A T I O N
T H E  S H O R T E S T  L I N E S  O F  T E X T
WILL STRETCH TO THE LENGTH OF THE LONGEST LINE

FKEY NOTE /LH/CTR/RH/FILL
```

Figure 7 Examples of the different note justifications

justified (/FILL/). Figure 7 on page 22-17 shows the different note justifications. These options work similar to word processing packages. Try adding a few notes on your own. Select FKey NOTE submenu /POSN/ and select the different options.

FKey NOTE

SUBMENU /PARMS/

5) NOTE CHARACTER WIDTH, VERTICAL SPACING, HORIZONTAL SPACING, AND CHARACTER HEIGHT (FKey NOTE submenu /PARMS/ (/CWID/ /VSP/ /HSP/ /CHT/)):

Other note parameters found under FKey NOTE /PARMS/ (/CWID/ /VSP/ /HSP/ /CHT/) allow you to change the character width, vertical spacing, horizontal spacing and character height.

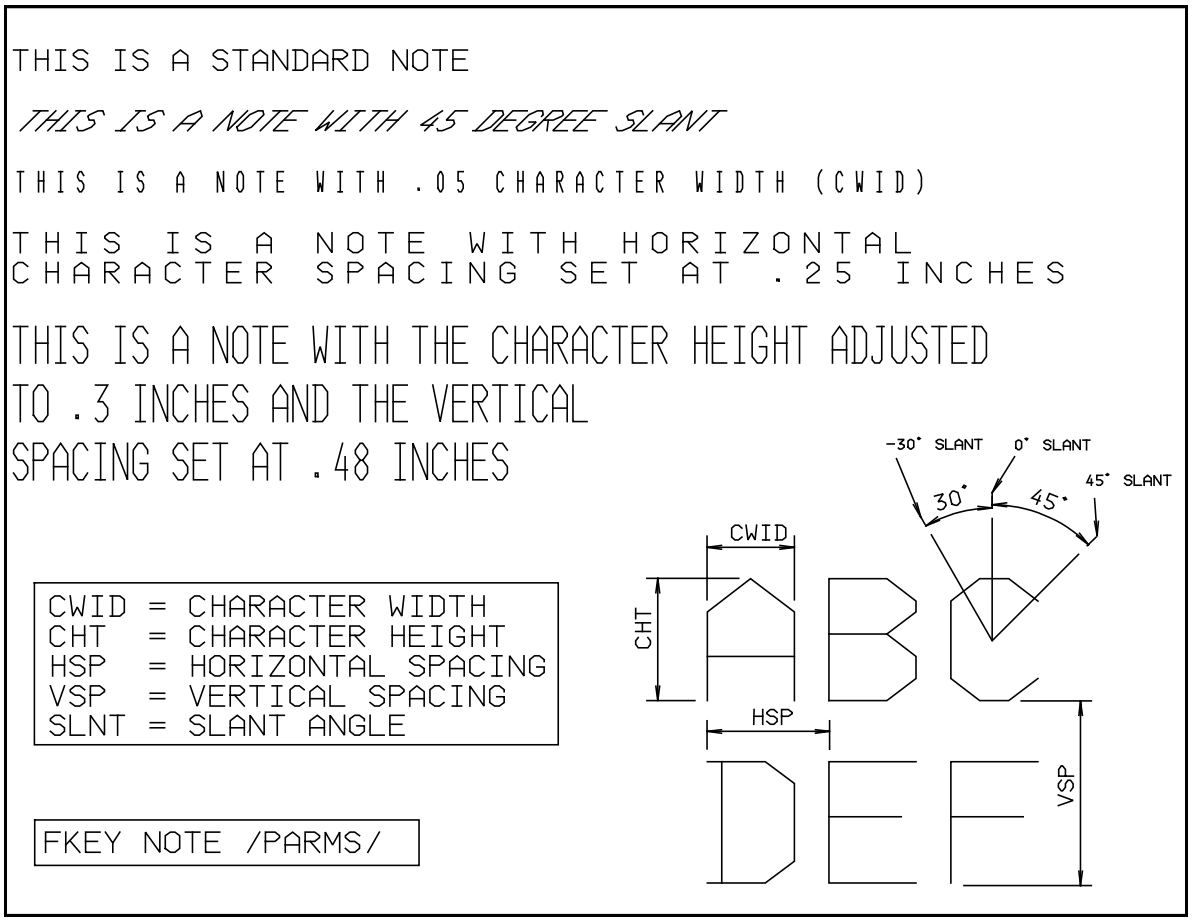

Figure 8 An example of different note parameters

Examples of each of these parameters are given in Figure 8 above.
Note that /CWID/ adjusts the width of individual letters; /VSP/ adjusts the distance between multiline notes; /HSP/ adjusts the horizontal spacing between individual letters; and /CHT/ adjusts the height of letters without affecting their other parameters (notice that changing the size of a note changes all parameters in proportion whereas /CHT/ changes only the character height).

6) NOTE CHARACTER WIDTH WITH RATIO OPTION, (FKey NOTE submenu /PARMS/ /CWID/):

The character width note parameter found under FKey NOTE /PARMS/ /CWID/ also allows you to change the character width by keying in the ratio of character width to character height.

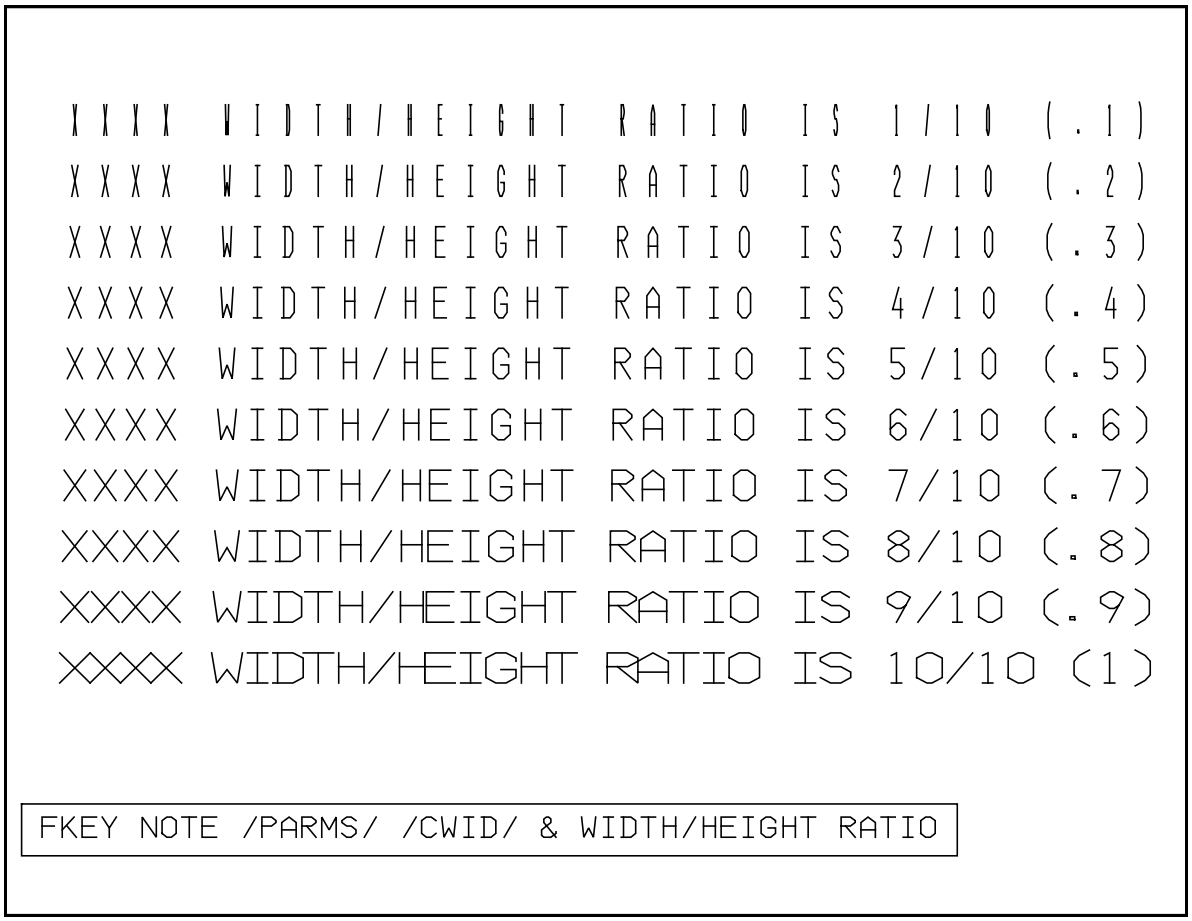

Figure 9 An example of different character width/height ratios

When parameter /CWID/ is selected the menu prompt ***Key character width / YN key ratio*** appears near the top of the screen and the message ***Character width = 0.11719*** appears underneath. Press the Y/N button on the mouse and the menu prompt will change to ***Key ratio for width-height***. KEY in the ratio and the message line underneath will reflect the current character width. The default ratio is .7143. Examples of different ratios are shown in Figure 9 above.

7) NOTE CHARACTER TO CHARACTER SPACING WITH RATIO OPTION, (FKey NOTE submenu /PARMS/ /HSP/):

The character to character spacing note parameter found under FKey NOTE /PARMS/ /HSP/ also allows you to change the character to character spacing by keying in the ratio of character

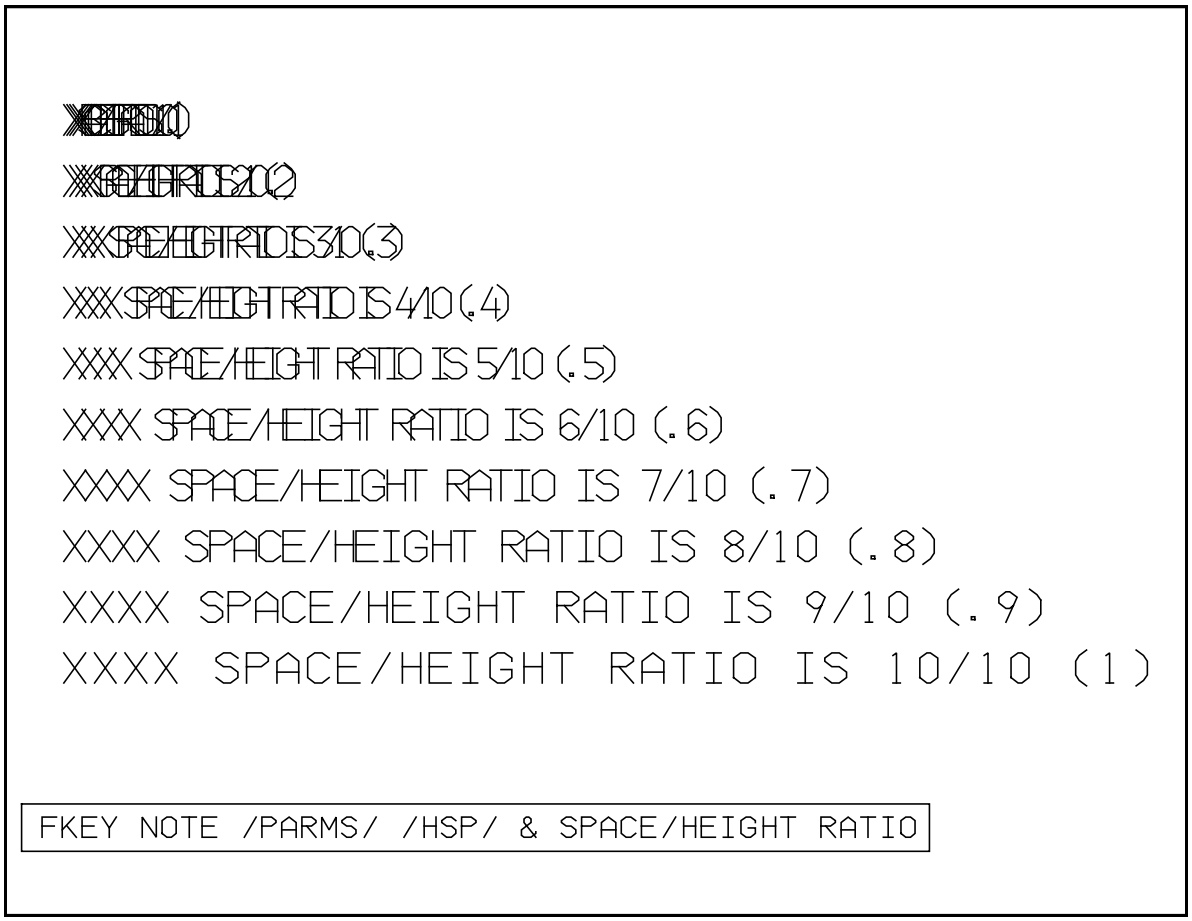

Figure 10 An example of different horizontal character to character space/height ratios

spacing to character height. When parameter /HSP/ is selected the menu prompt ***Key character to character spacing / YN key ratio*** appears near the top of the screen and the message ***Character to character spacing = 0.16406*** appears underneath. Press the Y/N button on the mouse and the menu prompt will change to ***Key ratio for space-height***. Key in the ratio and the message line underneath will reflect the current character to character spacing. The default ratio is 1.0. Examples of different ratios are shown in Figure 10 above.

8) NOTE VERTICAL LINE TO LINE SPACING WITH RATIO OPTION, (FKey NOTE submenu /PARMS/ /VSP/):

The line to line spacing (of multiline notes) note parameter found under FKey NOTE /PARMS/ /VSO/ also allows you to change the line to line spacing by keying in the ratio of line spacing

```
XXXX VSP SPACE/HEIGHT RATIO 1/1 (1)
THE SECOND LINE
THE THIRD LINE
AND THE FOURTH LINE

XXXX VSP SPACE/HEIGHT RATIO 1.25/1 (1.25)
THE SECOND LINE
THE THIRD LINE
AND THE FOURTH LINE

XXXX VSP SPACE/HEIGHT RATIO 1.5/1 (1.5)
THE SECOND LINE
THE THIRD LINE
AND THE FOURTH LINE

XXXX VSP SPACE/HEIGHT RATIO 1.75/1 (1.75)
THE SECOND LINE
THE THIRD LINE
AND THE FOURTH LINE

FKEY NOTE /PARMS/ /VSP/ & SPACE/HEIGHT RATIO
```

Figure 11 An example of different vertical line to line space/height ratios

to character height. When parameter /VSP/ is selected the menu prompt ***Key line to line spacing / YN key ratio*** appears near the top of the screen and the message ***Line to line spacing = 0.24609*** appears underneath. Press the Y/N button on the mouse and the menu prompt will change to ***Key ratio for space-height***. Key in the ratio and the message line underneath will reflect the current line to line spacing. The default ratio is 1.5. Examples of different ratios are shown in Figure 11 above.

9) NOTE CHARACTER WIDTH, AND CHARACTER HEIGHT SPECIAL OPTIONS (FKey NOTE submenu /PARMS/ (/CWID/ /CHT/)):

The note parameters found under FKey NOTE submenu /CWID/ and /CHT/ can have both positive and negative numbers entered. The various combinations are shown in Figure 12. These

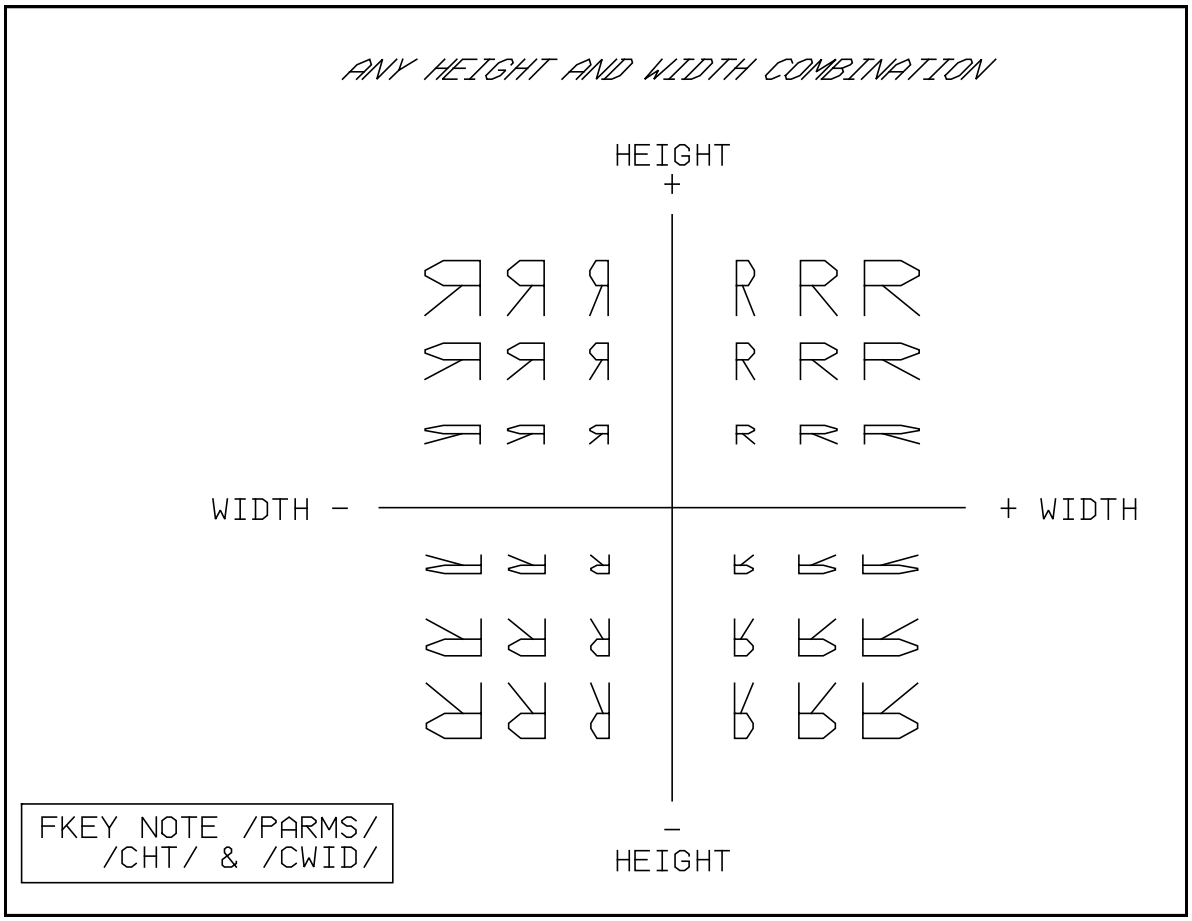

Figure 12 An example of positive and negative entries for /CHT/ and /CWID

options can be useful for notes to be read from a mirror, or for reverse lettering for the bottom of a mold.

10) NOTE HORIZONTAL SPACING SPECIAL OPTIONS (FKey NOTE submenu /PARMS/ (/HSP/):

The parameter for FKey NOTE subMenu /HSP/ can be both a positive or negative number. The various combinations are shown in Figure 13 below. These options can be useful for notes to

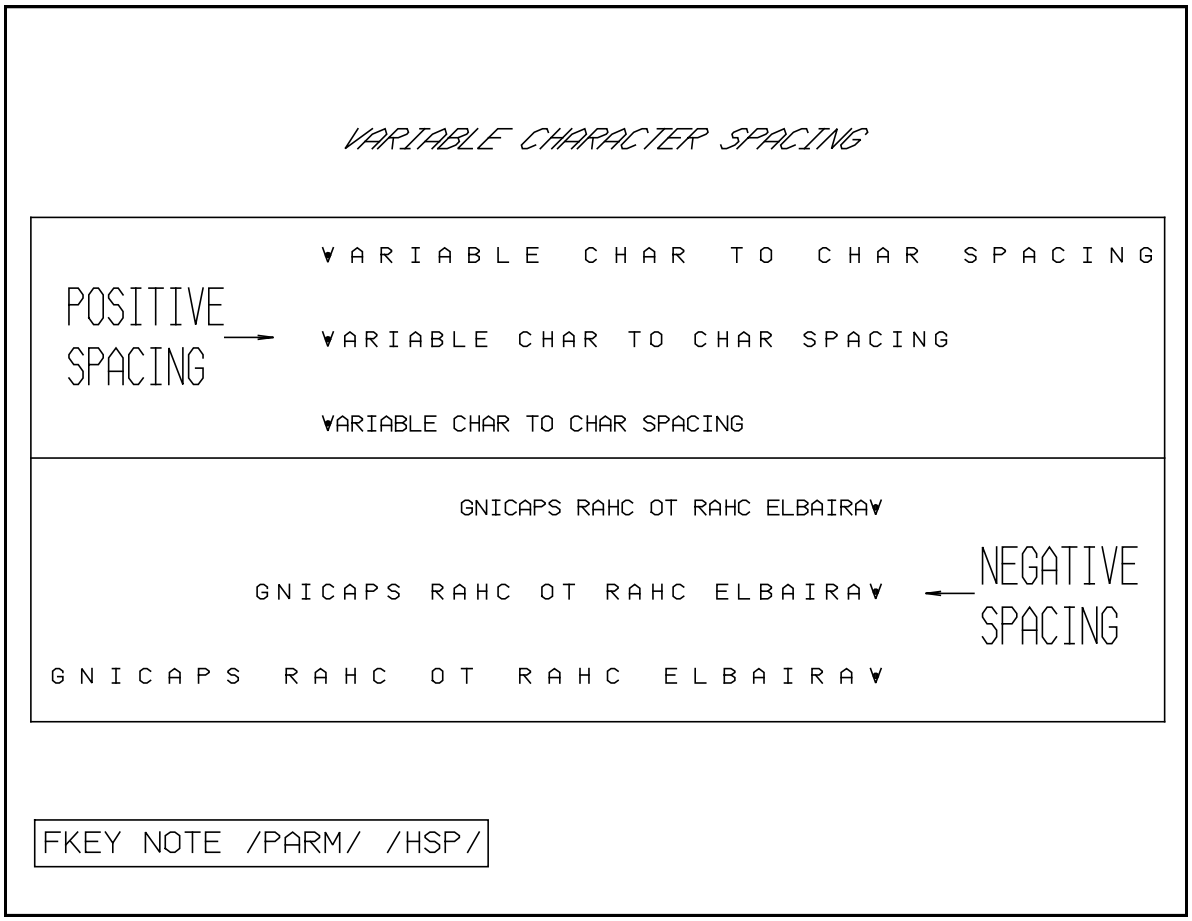

Figure 13 An example of positive and negative entries for /HSP/

be read from the underside of an object, or for special effects.

11) NOTE VERTICAL SPACING SPECIAL OPTIONS (FKey NOTE submenu /PARMS/ (/VSP/):

The note parameter found under FKey NOTE submenu /VSP/ can have both positive and negative numbers entered. The various combinations are shown in Figure 14 below.

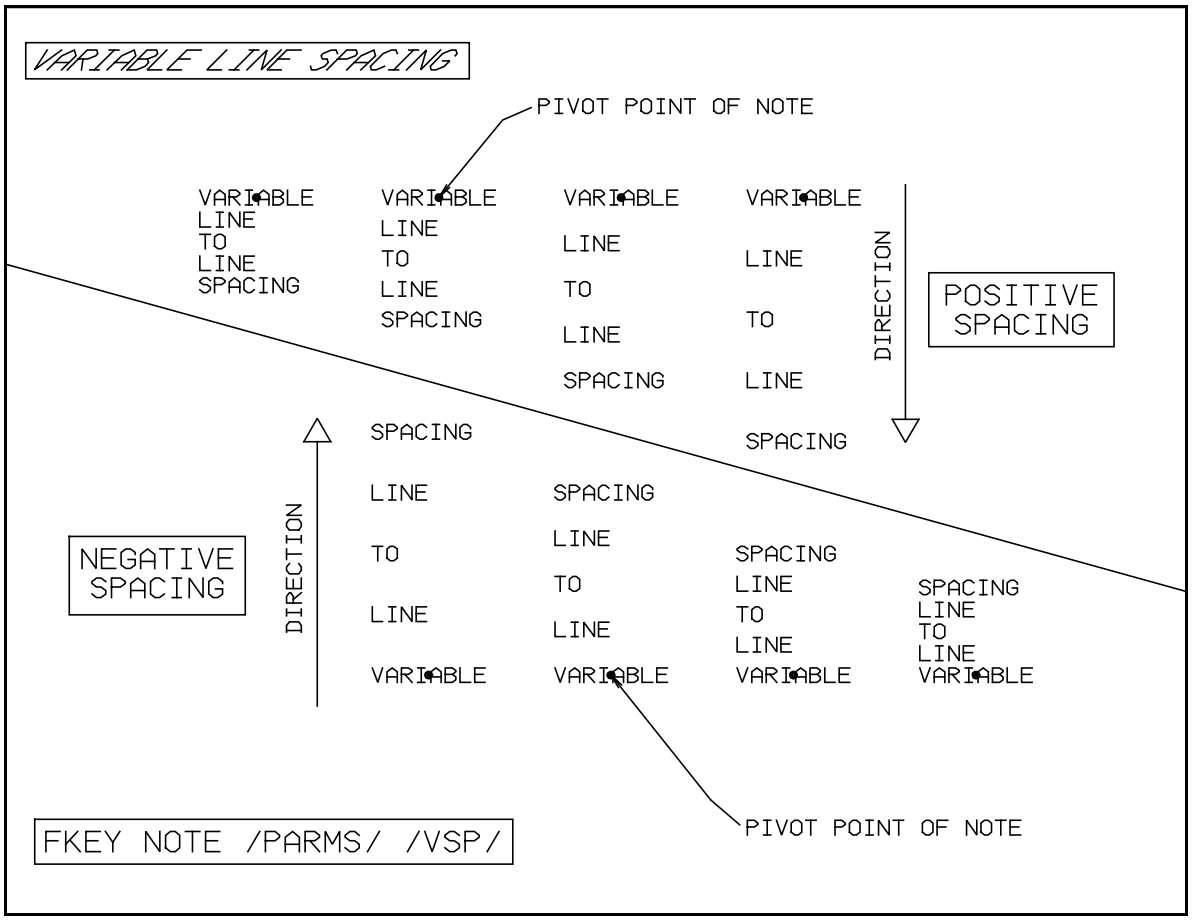

Figure 14 An example of positive and negative entries for /VSP/

12) NOTE SLANT (FKey NOTE submenu /PARMS/ /SLNT/):

The note slant parameter is found under FKey NOTE submenu /PARMS/ /SLNT/. The slant parameter can be used in situations where you want to give your note an italicized look, for

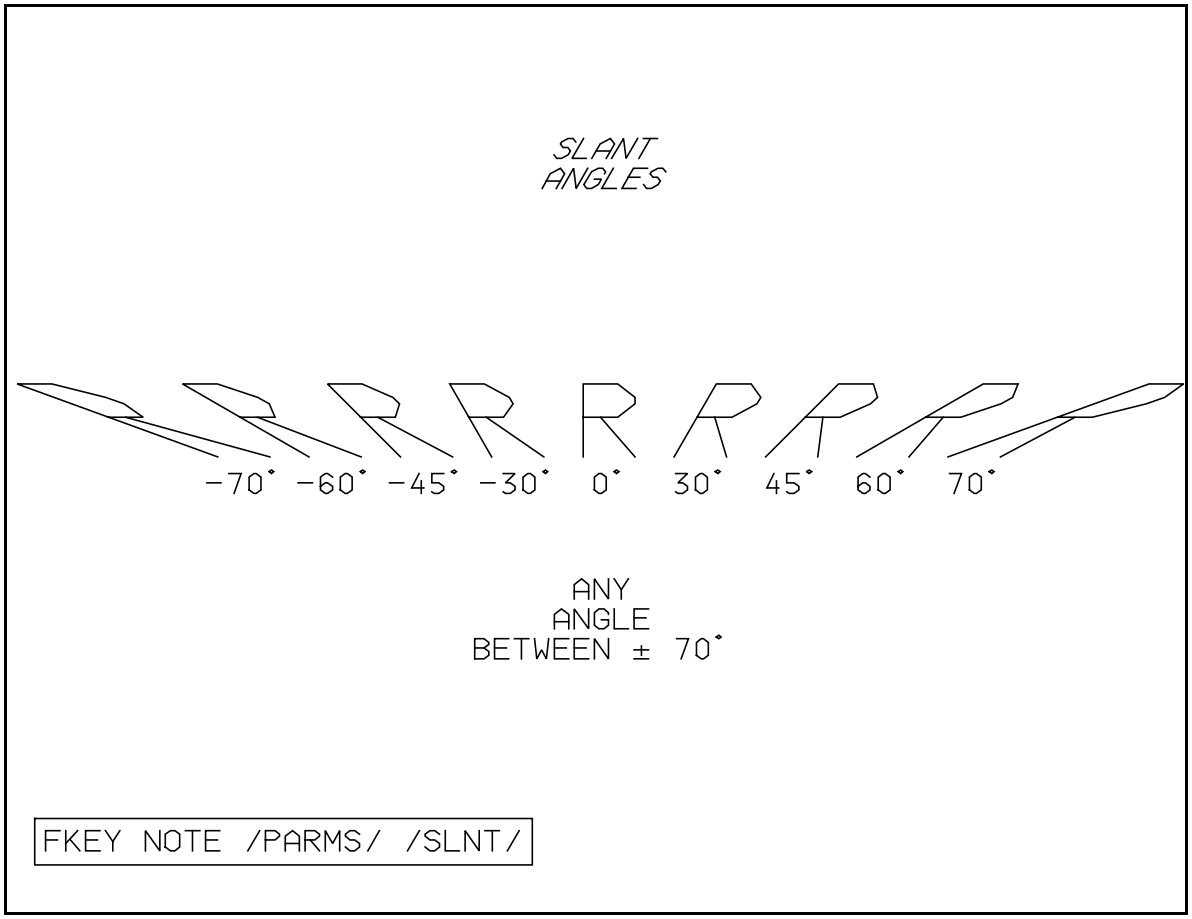

Figure 15 An example of note slant

labelling in isometric views, or for special effects. To use this parameter select FKey NOTE submenu /PARMS/ /SLNT/ and key in an angle between plus/minus 70 degrees. Figure 15 above shows some examples. (Note that a note in the vertical orientation has a slant of 0 degrees).

13) NOTE SPAN (FKey NOTE submenu /PARMS/ /SPN/):

The note span parameter is found under FKey NOTE submenu /PARMS/ /SPN/. The span parameter can be used in situations where you want to center text for placement in columns. To

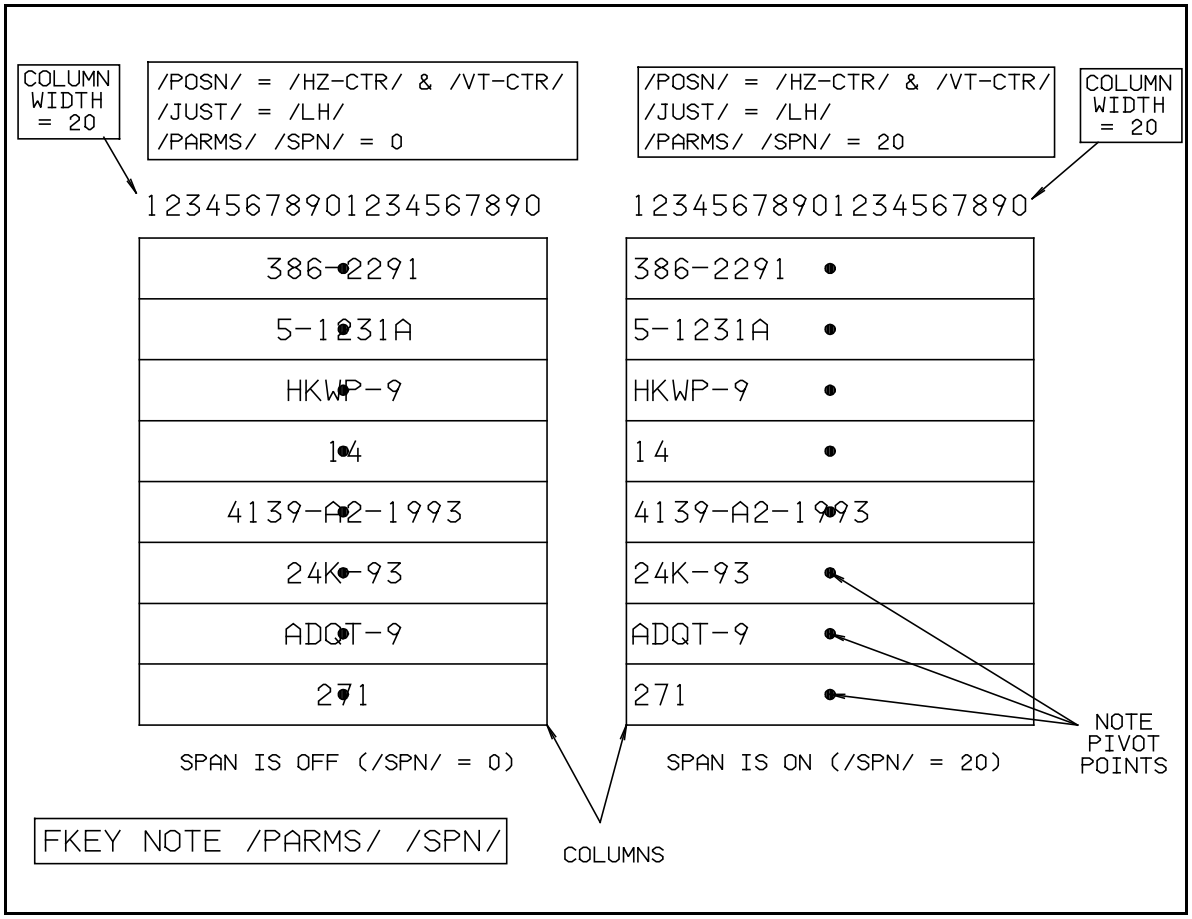

Figure 16 An example of note span

use the /SPN/ parameter you must know the number of characters that can be accommodated in the column width (in the example in Figure 16 above, 20 characters can be accommodated). Select FKey NOTE and submenu /PARMS/ /SPN/ and key in 20 (for 20 characters). Now place points in the center of the column as the start point for each note. Make sure the /POSN/ parameter is set for /HZ-CTR/ /VT-CTR/ and the justification is either /LH/ or /RH/. Now select the center point and type in the note or select an existing note. It will be automatically aligned as shown in Figure 16 above.

FKey NOTE

SUBMENU /GEN NOTE/

14) GENERAL NOTE OPTION (FKey NOTE submenu /GEN NOTE/:

The note parameter found under FKey NOTE submenu /GEN NOTE/ allows you to enter a column of notes, with each note being equally spaced. The column can be created from the top

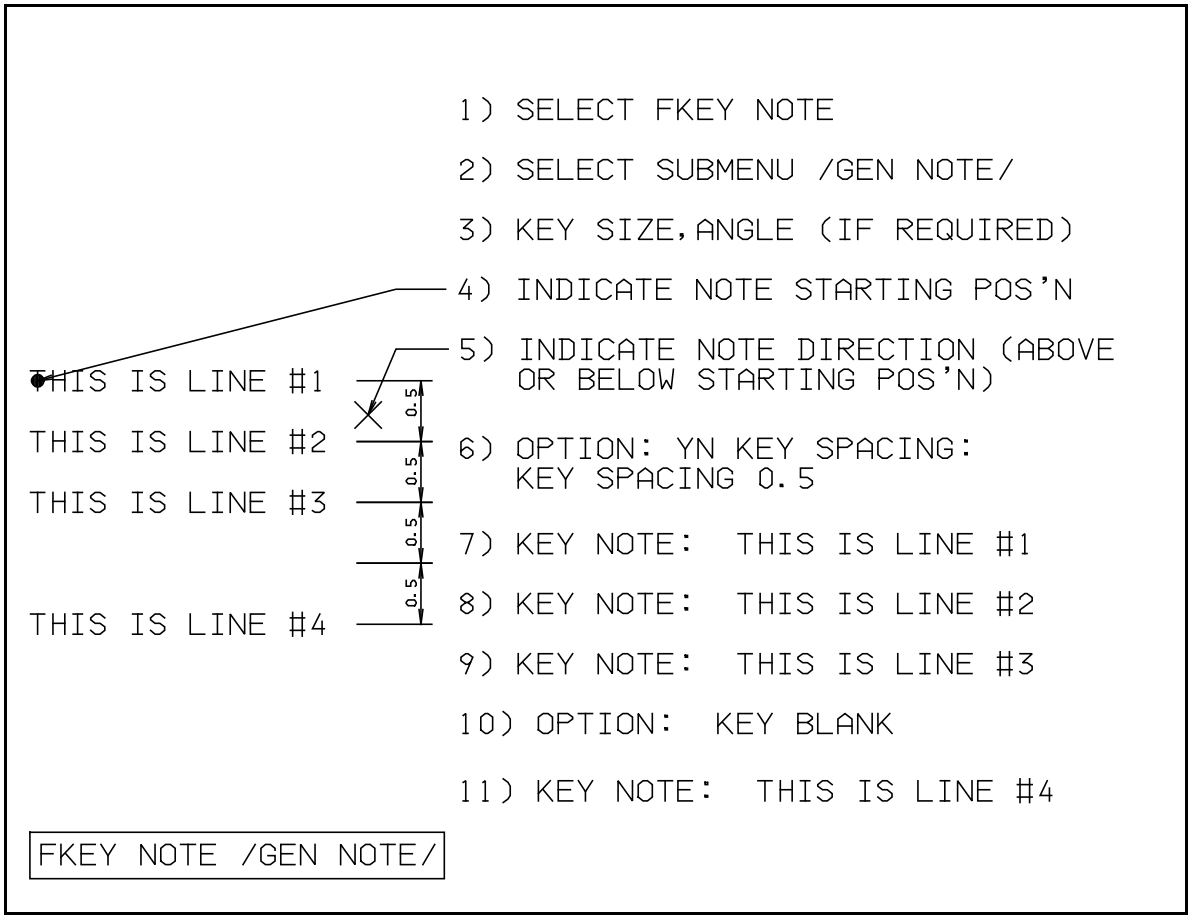

Figure 17 An example of /GEN NOTE/ (general note)

down or the bottom up and can be created from existing notes or new notes. After /GEN NOTE/ is finished, each of the lines of notes are completely separate. This option provides a means to quickly enter information into charts and bills of materials, as well as entering multiline separate notes. An example of a general note is shown in Figure 17 above. Follow the numbered sequence to try it for yourself.

FKey NOTE

SUBMENU /CHG/

The note parameters found under FKey NOTE submenu /CHG/ allow you to change existing notes. You can edit a note (i.e. change the text in the note), move it to a new location, change its size (to standard small or standard large, or a keyed size), change its angle, change its justification and change the length of the note to fit into a fixed length.

15) EDIT AN EXISTING NOTE:

To edit an existing note select FKey NOTE, submenu /CHG/ /EDIT/. The menu prompt ***Sel note*** appears near the top of the display screen. Select an existing note on the screen. The note you selected is now highlighted (i.e. it turns green), the menu prompt changes to read ***Sel note / Key edit***, and the note appears in the key input area at the bottom of the screen. You can use the following keyboard keys to help you enter and edit the note:

- **KEYBOARD KEYS:** You can key in the note, or key over existing characters in the note. The cursor under a character shows you the current entry position.

- **INSERT KEY:** You can press the insert key on your keyboard. The cursor under a character on the key input line will turn green to let you know you are in insert mode. Any characters you type will be inserted before the green cursor. Each time you press the insert key on the keyboard the cursor will toggle from insert mode (green cursor) to overwrite mode (white cursor).

- **DELETE KEY:** Deletes the character above the cursor.

- **END KEY:** Moves the cursor to the end of the text.

- **HOME KEY:** Moves the cursor to the beginning of the text.

- **BACKSPACE KEY:** Deletes the character immediately to the left of the cursor.

- **LEFT AND RIGHT ARROW KEYS:** The left and right arrow keys move the cursor to the left or the right in the key input line.

Remember that a single note can be up to 256 characters long. The text entry line will scroll off to the right if you enter more characters than will fit on a single line.

16) MOVE AN EXISTING NOTE:

To move an existing note select FKey NOTE, subMenu /CHG/ /MOVE/. The menu prompt ***Sel note*** appears near the top of the display screen. Select an existing note on the screen. The note you selected is now highlighted (i.e. it turns green), the menu prompt changes to read ***Key DX,DY / Key blnk for old DX,DY / Sel pt / Ind posn***, and the note ***DX = 0.0000 DY = 0.0000*** appears in the message area near the top of the screen. You can move the note the following ways:

- SELECT a point and the pivot point of the note will move to the selected point.
- INDICATE a position and the pivot point of the note will move to the indicated position.
- KEY in DX,DY (i.e. delta X, delta Y), the distance to move in the X, and the Y directions. A confirmation of the current DX,DY values appears in the message line near the top of the screen. The note will move Delta X and Delta Y as keyed in.
- KEY a blank (i.e. press the ENTER key without having first keyed anything in) and the note will move the existing DX,DY.

17) RESIZE AN EXISTING NOTE:

To resize an existing note select FKey NOTE, submenu /CHG/ /SIZE/. The menu prompt ***Sel note*** appears near the top of the display screen. Select an existing note on the screen. The note you selected is now highlighted (i.e. it turns green) and the menu prompt changes to read ***Sel note / Key size***. You can resize the note the following ways:

- KEY the new note size and the note will change to that size.
- SELECT an existing note (i.e. second note selected) and the first note selected will change to the size of the second note (i.e. you are referencing the size of an existing note).

18) CHANGE THE ANGLE OF AN EXISTING NOTE:

To change the angle of an existing note select FKey NOTE, submenu /CHG/ /ANGLE/. The menu prompt ***Sel note*** appears near the top of the display screen. Select an existing note on the screen. The note you selected is now highlighted (i.e. it turns green), the menu prompt changes to read ***Sel note / Key angle*** and the current angle and the note ***Angle = 0.0000*** appears in the message area near the top of the screen. You can change the angle of the note the following ways:

- KEY the new note angle and the note will rotate to that angle.
- SELECT an existing note (i.e. second note selected) and the first note selected will rotate to the angle of the second note (i.e. you are referencing the angle of an existing note).

19) CHANGE THE SIZE OF AN EXISTING NOTE TO CADAM STANDARD SMALL SIZE:

To change the size of an existing note to CADAM standard small size select FKey NOTE, submenu /CHG/ /SMALL/. The menu prompt ***Sel note*** appears near the top of the display screen. Select an existing note on the screen. The note you selected will change to the CADAM standard small size.

20) CHANGE THE SIZE OF AN EXISTING NOTE TO CADAM STANDARD LARGE SIZE:

To change the size of an existing note to CADAM standard large size select FKey NOTE, submenu /CHG/ /LARGE/. The menu prompt ***Sel note*** appears near the top of the display screen. Select an existing note on the screen. The note you selected will change to the CADAM standard large size.

21) TO REJUSTIFY AN EXISTING NOTE:

To rejustify an existing note select FKey NOTE, submenu /CHG/ /JUST/. The menu prompt ***Sel note*** appears near the top of the display screen. Select an existing note on the screen. The note you selected will be rejustified to the current justification settings. These current justification settings can be seen on the right hand side of the first submenu line displayed after FKey NOTE is selected.

22) TO ADJUST AN EXISTING NOTE TO FIT TO A LENGTH:

To adjust the length of an existing note so that it fits between two points or two lines, or to fixed length select FKey NOTE, submenu /CHG/ /FIT/. The menu prompt ***Sel point / Ind point / Sel note / Sel line / Key length*** appears near the top of the display screen and the note ***Fit = 2.5920*** appears in the message area near the top of the screen (the actual number displayed will vary).

The fit length can be determined in several different ways as follows:

- KEY the length (e.g. 2.2592). The keyed length will be displayed as ***Fit = 2.2592***.

- SELECT (or INDICATE) the first point and the menu prompt ***Sel or Ind point 2*** is displayed near the top of the screen. SELECT (or INDICATE) the second point. The distance between the two points is the fit length. The length will be displayed as ***Fit = 1.6782*** (the actual number displayed will vary).

- SELECT an existing line. The menu prompt ***Sel line 2 / YN one line*** is displayed near the top of the screen. Press the Y/N button on the mouse and the length of the line becomes the fit length. The length will be displayed as ***Fit = 3.8351*** (the actual number displayed will vary).

- SELECT the first of two parallel lines. The menu prompt ***Sel line 2 / YN one line*** is displayed near the top of the screen. SELECT the second of two parallel lines and the distance between the parallel lines becomes the fit length. The length will be displayed as ***Fit = 2.6112*** (the actual number displayed will vary).

Once the fit length is determined select an existing note and that length of that note will be adjusted to the fit length.

An example of FKey NOTE /CHG/ /FIT/ is shown in Figure 18 on page 22-36.

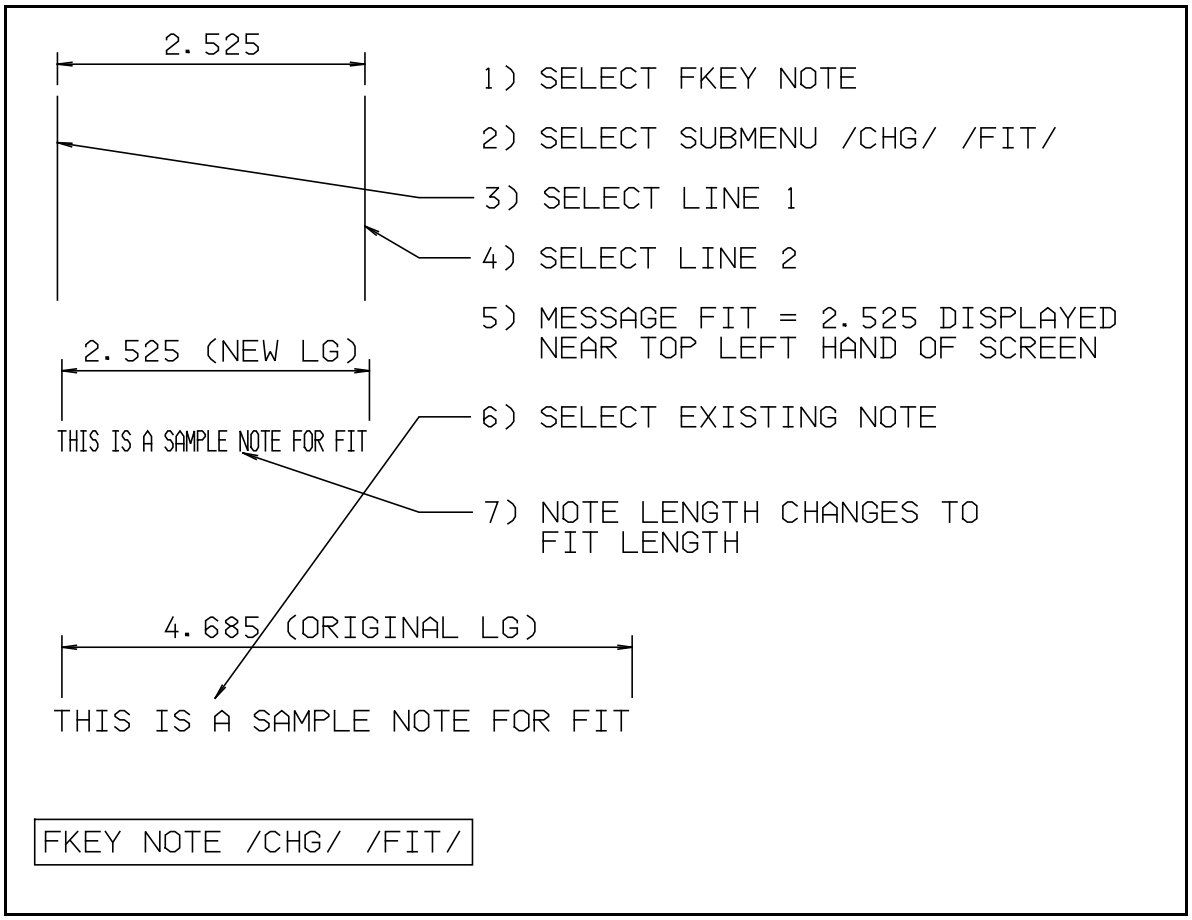

Figure 18 An example of adjusting a note to fit a length

CHAPTER 23

FKey DIMENSION

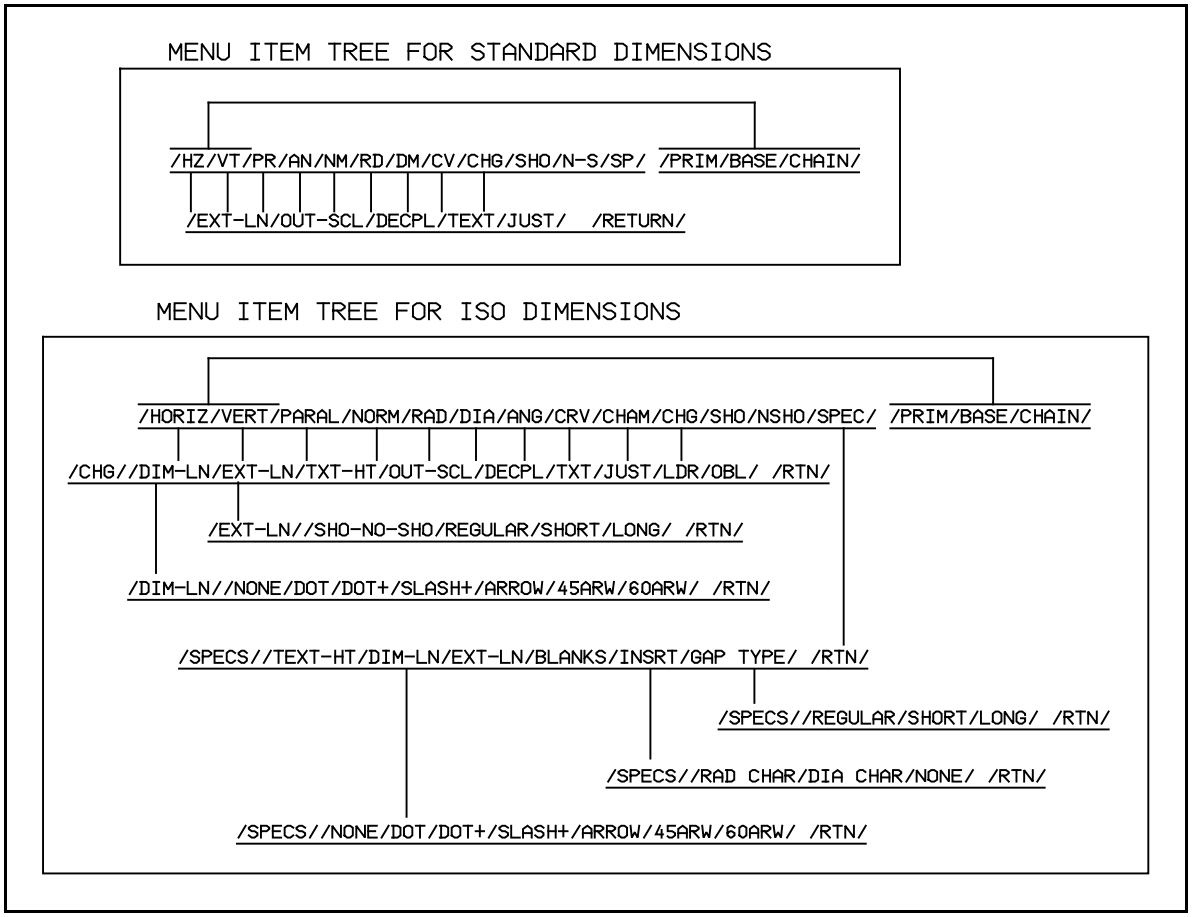

Figure 1 - Menu Item Tree for FKey DIMENSION

MICRO CADAM has two types of dimensioning standards. They are called STANDARD and ISO.

STANDARD dimensions are based on the CADAM Dimension standard system.

ISO dimensions are based on the dimension standard recommended by the International Organization for Standardization.

The default dimensioning standard (i.e. the one the system normally begins with) is set using the option settings program MCOPT (see Chapter 1).

You can verify or change the current active dimensioning standard by selecting FKey FILE

```
FILES            View  PV  Scale   0.02 Wdo   0.775,  0.0  (C)1993 ALTIUM  1.3C
                            Sel option / YN return
                             Dimension = ISO          Drv:C Grp:CAD  Usr:DEMO
        UNITS                VIEW CONV             MAINFRAME COMPATIBILITY
        *    INCH                 1ST ANGLE            DIT/SYM TXT NO SCL
             FEET            *    3RD ANGLE         *  DIT/SYM TXT NORMAL
             MM
             CM
             METER
             OTHERS

        DIMENSION            HATCH/FILL
             STANDARD             OFF
        *    ISO             *    ON

                                                                      /RTN/
```

Figure 2 The display screen accessed by FKey FILE SubMenu /UNITS/

submenu /UNITS/. The display screen shown in Figure 2 above will now appear. Notice that under the DIMENSION label, the two dimensioning standards, STANDARD and ISO appear. The dimension with the asterisk beside it is the current active standard. Select either ISO or STANDARD to make it the active standard and an asterisk will appear beside it. Select submenu /RTN/ or press the Y/N button on the mouse to return to the front page of your drawing.

The menu prompts for both ISO and STANDARD dimensions are similar. ISO dimensions however have many more additional dimensioning options than STANDARD dimensions.

The following types of dimensions can be created:

- HORIZONTAL dimensions
- VERTICAL dimensions
- PARALLEL dimensions
- NORMAL dimensions
- RADIUS dimensions
- DIAMETER dimensions
- ANGLE dimensions
- CURVE dimensions
- CHAMFER dimensions (ISO only)

Dimensions can be modified as follows:

- TEXT HEIGHT changed
- EXTENSION LINES modified
- NUMBER OF DECIMAL PLACES changed, and fractions used
- TEXT added to the dimension
- JUSTIFICATION of the dimension changed
- OUT-OF-SCALE conversion

ISO dimensions can be modified in additional ways:

- INSERTION CHARACTERS defined
- GAP TYPE modified
- LEADERS used
- OBLIQUE dimension lines used
- DIMENSION LINES modified

There are four dimension classes to assist you with dimension creation:

- PRIMARY dimensions
- BASE dimensions
- CHAIN dimensions
- DATUM dimensions

These dimension classes only apply to horizontal and vertical dimensions.

Dimensions can also be created in different units and dual dimensioning can be used.

DIMENSIONS -- TO SCALE OR NOT TO SCALE:

When you add a dimension to a MICRO CADAM drawing, the program interrogates the elements and calculates the exact dimension between them. This dimension is called an **IN SCALE** dimension. The power of any CAD system is due in large part to its "in scale" dimensioning. If you apply a dimension to a part and the resulting dimension is not what you expect it to be, it means that the part is not drawn correctly. The part geometry must be corrected and the part must be redimensioned.

The ***golden rule*** for any CAD system is: **DRAW EVERYTHING TO SCALE, ALL THE TIME, AND EVERY TIME.** If you have drawings that are *out of scale*, then you have time bombs ticking away in your data base, waiting to come back, perhaps years later, and explode, possibly causing tremendous damage. The prime consideration is the integrity of your data base. Make sure that 100% of the drawings in your database are in scale drawings.

Here are three examples of situations where you *would* use **OUT-OF-SCALE** dimensions:

- **Parts that are too long to draw in one piece on a drawing:** Normally a long part is *broken* and drawn in two sections. The part is first dimensioned (between the two broken sections) using an *in scale* dimension. The *in scale* dimension is then converted to an *out-of-scale* dimension by using FKey DIM /CHG/ /OUT-SCL/. Once a dimension is converted to an out-of-scale dimension, you may edit the dimension number by using FKey DIM /CHG/ /TXT/ and type in whatever number you want the dimension to be. Once a dimension is converted to out-of-scale, you cannot convert it back; you must erase it and redimension to apply another in scale dimension. Note that in scale dimensions cannot be edited by submenu /TXT/. In scale dimensions are protected.

- **The hook lift for an overhead crane:** In this case two points would be created on the drawing and an in scale dimension placed between them. This in scale dimension would be converted to an out of scale dimension and the dimension number edited (see the paragraph immediately above). A second arrow would be added to the bottom dimension arrow, showing that this dimension is not in scale.

- **Parts dimensioned using a lookup table:** Sometimes a part will be dimensioned with letters (i.e. A, B, C, D, etc). The letters are then referenced in a look up table, thus providing the dimensions of the part. Any part dimensioned in this manner cannot be mistaken for an in scale dimension.

Examples of these types of out of scale dimensions are shown in Figure 3 on page 23-6. Figure 4 on page 23-6 shows the different parts of a dimension.

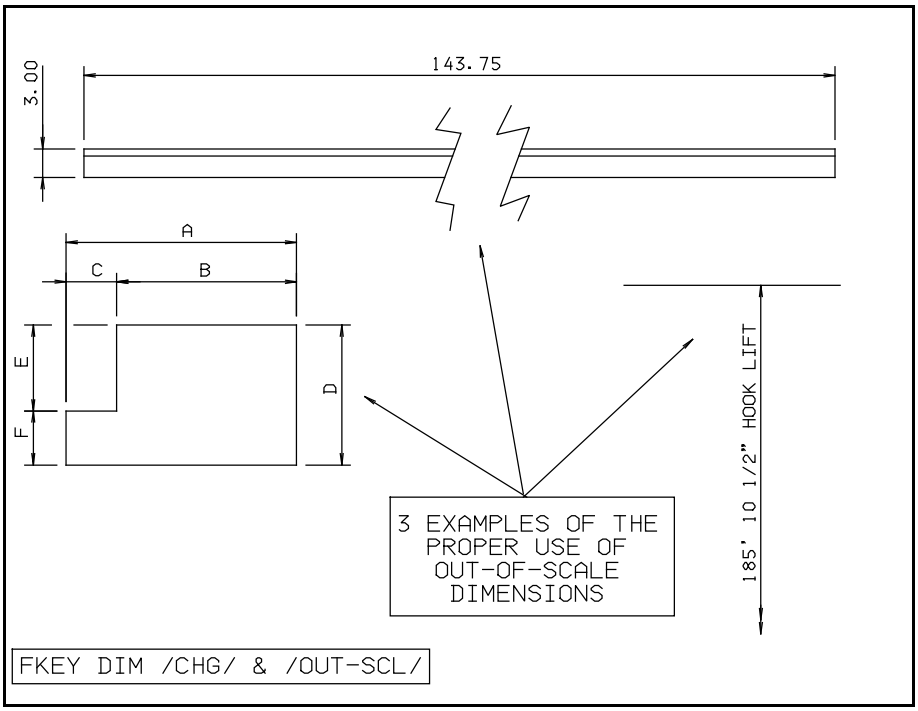

Figure 3 Examples of out of scale dimensions

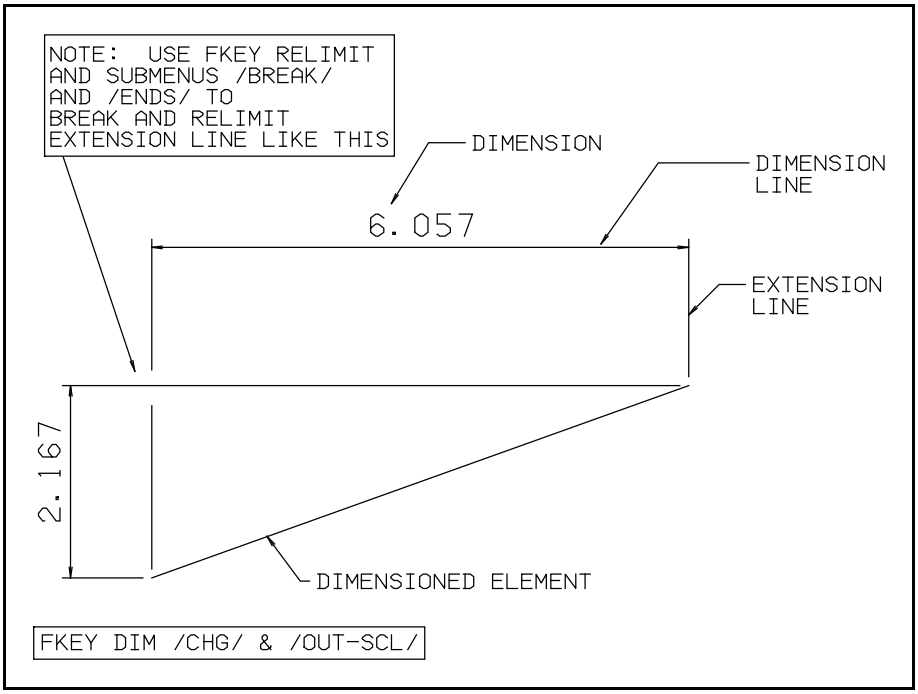

Figure 4 Different parts of a dimension.

FUNCTION KEY DIMENSION SUBMENU OPTIONS FOR STANDARD DIMENSIONS:

- /HZ/ & /VT/ — Creates horizontal and vertical dimensions
  - //PRIM/ — ·The primary dimensioning class
    ·Creates horizontal and vertical dimensions
    ·Creates datum dimensions between the origin and points, lines or circles
  - //BASE/ — ·The base dimensioning class
    ·Creates a series of dimensions measured from a baseline or point
  - //CHAIN/ — ·The chain dimensioning class
    ·Creates a chain of consecutive dimensions
- /VT/ — Creates vertical dimensions
- /PR/ — Creates parallel dimensions
- /AN/ — Creates angular dimensions
- /NM/ — Creates normal dimensions
- /RD/ — Creates radius dimensions
- /DM/ — Creates diameter dimensions
- /CV/ — Creates curve dimensions
- /CHG/ — Allows you to change an existing dimension
  - /EXT-LN/ — No shows the extension line of an existing dimension, or a dimension just created
  - /OUT-SCALE/ — Changes an existing dimension, or a dimension just created to an out-of-scale dimension

- /DECPL/ — Changes the number of decimal places of an existing dimension, or a dimension just created. Can also dimension in fractions instead of decimals.
- /TEXT/ — Adds text to an existing dimension, or a dimension just created
- /JUST/ — Justify the text of an existing dimension, or a dimension just created.

- /SHO/ — Redisplays dimensions that have been no shown.
- /N-S/ — No shows dimensions
- /SP/ — Accesses a special display screen that allows you to:
  - Change the measurement units of a dimension
  - Define the tolerances and limits to be displayed with the dimensions
  - Define the trailing label to be displayed with the dimensions
  - Activates the secondary dimensioning mode (i.e. activates dual dimensioning)

FUNCTION KEY DIMENSION SUBMENU OPTIONS FOR ISO DIMENSIONS:

- /HORZ/ & /VERT/ Creates horizontal and vertical dimensions

  - //PRIM/ ·The primary dimensioning class
    ·Creates horizontal and vertical dimensions
    ·Creates datum dimensions between a datum (reference point) and points, lines or circles

  - //BASE/ ·The base dimensioning class
    ·Creates a series of dimensions measured from a baseline or point

  - //CHAIN/ ·The chain dimensioning class
    ·Creates a chain of consecutive dimensions

- /VERT/ Creates vertical dimensions

- /PARAL/ Creates parallel dimensions

- /NORM/ Creates normal dimensions

- /RAD/ Creates radius dimensions

- /DIA/ Creates diameter dimensions

- /ANG/ Creates angular dimensions

- /CRV/ Creates curve dimensions

- /CHAM/ Creates chamfer dimensions

- /CHG/ Allows you to change an existing dimension (NOTE: ALL TYPES OF DIMENSIONS ACCESS THIS MENU UNDER /CHG/ AFTER THE DIMENSION HAS BEEN POSITIONED)

  - /DIM-LN/ Changes the ends of the witness line of an existing dimension, or a dimension just created

- /NONE/ — Erases any existing end condition
- /DOT/ — Places a dot at the end of the witness line
- /DOT+/ — Places a dot with a + at the end of the witness line
- /SLASH+/ — Places a slash with a + at the end of the witness line
- /ARROW/ — Places an arrow at the end of the witness line
- /45ARW/ — Places a 45-degree arrow at the end of the witness line
- /60ARW/ — Places a 60-degree arrow at the end of the witness line

- /EXT-LN/ — Modifys the distance between an extension line and an existing dimension, or a dimension just created. Also turns the extension line display on/off.
  - /SHO-NO-SHO/ — Turns the display of the extension line on/off
  - /REGULAR/ — The extension line meets the dimensioned element
  - /SHORT/ — The extension line stops a preset distance short of the dimensioned element
  - /LONG/ — The extension line stops a preset distance past the dimensioned element
- /TEXT-HT/ — Changes the text height of an existing dimension, or a dimension just created
- /OUT-SCALE/ — Changes an existing dimension, or a dimension just created to an out-of-scale dimension

- /DECPL/ Changes the number of decimal places of an existing dimension, or a dimension just created. Can also dimension in fractions instead of decimals.
- /TXT/ Adds text to an existing dimension, or a dimension just created
- /JUST/ Justify the text of an existing dimension, or a dimension just created.
- /LDR/ Creates a leader line for an existing dimension, or a dimension just created
- /OBL/ Slants the dimension lines of an existing dimension, or a dimension just created

- /SHO/ Redisplays dimensions that have been no shown.
- /NSHO/ No shows dimensions
- /SPEC/ Accesses a special display screen that allows you to:
  - Change the measurement units of a dimension
  - Define the tolerances and limits to be displayed with the dimensions
  - Define the trailing label to be displayed with the dimensions
  - Activates the secondary dimensioning mode (i.e. dual dimensioning)

- /TEXT-HT/ Sets the default value for the dimension text height
- /DIM-LN/ Sets the default for the end condition of the witness lines
  - /NONE/ Erases any existing end condition

- /DOT/ Places a dot at the end of the witness line
- /DOT+/ Places a dot and a + at the end of the witness line
- /SLASH+/ Places a slash and a + at the end of the witness line
- /ARROW/ Places an arrow at the end of the witness line
- /45ARW/ Places a 45-degree arrow at the end of the witness line
- /60ARW/ Places a 60-degree arrow at the end of the witness line

- /EXT-LN/ Sets the distance for extension lines to overshoot dimensioned elements
- /BLANKS/ Sets the number of blank spaces between the insert characters and dimension text
- /INSRT/ Sets the character to be inserted before the dimension text
  - /RAD CHAR/ All dimensions are displayed with radius dimension characters
  - /DIA CHAR/ All dimensions are displayed with diameter dimension characters
  - /NONE/ No special insert character is displayed
- /GAP TYPE/ Sets the length of extension lines
  - /REGULAR/ The extension line will meet the dimensioned element
  - /SHORT/ The extension line will stop a preset distance

		short of the dimensioned element
·	/LONG/	The extension line will stop a preset distance past the dimensioned element

Specific information on the submenu options for FKey DIM are listed with page numbers as follows:

FKey DIM			
DIM SUBMENU ITEM	ITEM NUMBER	DESCRIPTION	PAGE NO.
/HORZ/	1	HORIZONTAL DIMENSION BETWEEN TWO POINTS	23-17
	2	HORIZONTAL DIMENSION ALONG A LINE	23-18
	3	HORIZONTAL DIMENSION BETWEEN TWO VERTICAL LINES	23-19
/VERT/	4	VERTICAL DIMENSION BETWEEN TWO POINTS	23-23
	5	VERTICAL DIMENSION ALONG A LINE	23-24
	6	VERTICAL DIMENSION BETWEEN TWO VERTICAL LINES	23-25
/PARAL/	7	PARALLEL DIMENSION BETWEEN TWO POINTS	23-29
	8	PARALLEL DIMENSION ALONG A LINE (i.e. the actual length of the line)	23-30
	9	PARALLEL DIMENSION BETWEEN TWO POINTS MEASURED PARALLEL	23-31
/NORM/	10	NORMAL DIMENSION BETWEEN TWO ELEMENTS	23-35
/RAD/	11	RADIUS DIMENSION OF AN ARC OR CIRCLE	23-39
/DIA/	12	DIAMETER DIMENSION OF A CIRCLE	23-43
/ANG/	13	ANGLE DIMENSION BETWEEN TWO INTERSECTING LINES	23-47
/CRV/	14	CURVE DIMENSION OF AN ARC OR SPLINE	23-53
/CHAM/	15	CHAMFER DIMENSION OF AN ARC OR SPLINE	23-57
DIMENSION OPTIONS	PAGE 1	DIMENSION OPTIONS PAGE 1	23-61
	PAGE 2	DIMENSION OPTIONS PAGE 2	23-62
	DEC PL	EXAMPLES OF DIFFERENT DECIMAL PLACES AND ANGLE TYPE SETTINGS	23-63
DIMENSION CLASSES	PRIMARY	PRIMARY DIMENSION CLASS	23-66
	BASE	BASE DIMENSION CLASS	23-67
	CHAIN	CHAIN DIMENSION CLASS	23-68
	DATUM	DATUM DIMENSION CLASS	23-69

FKey DIM

SUBMENU /HZ/

AND

SUBMENU /HORZ/

FKEY DIM SUBMENU /HZ/ (STANDARD DIM) AND /HORZ/ (ISO DIM):

The menu prompts for both STANDARD and ISO dimensions are very similar, so we will only look at the ISO dimensions.

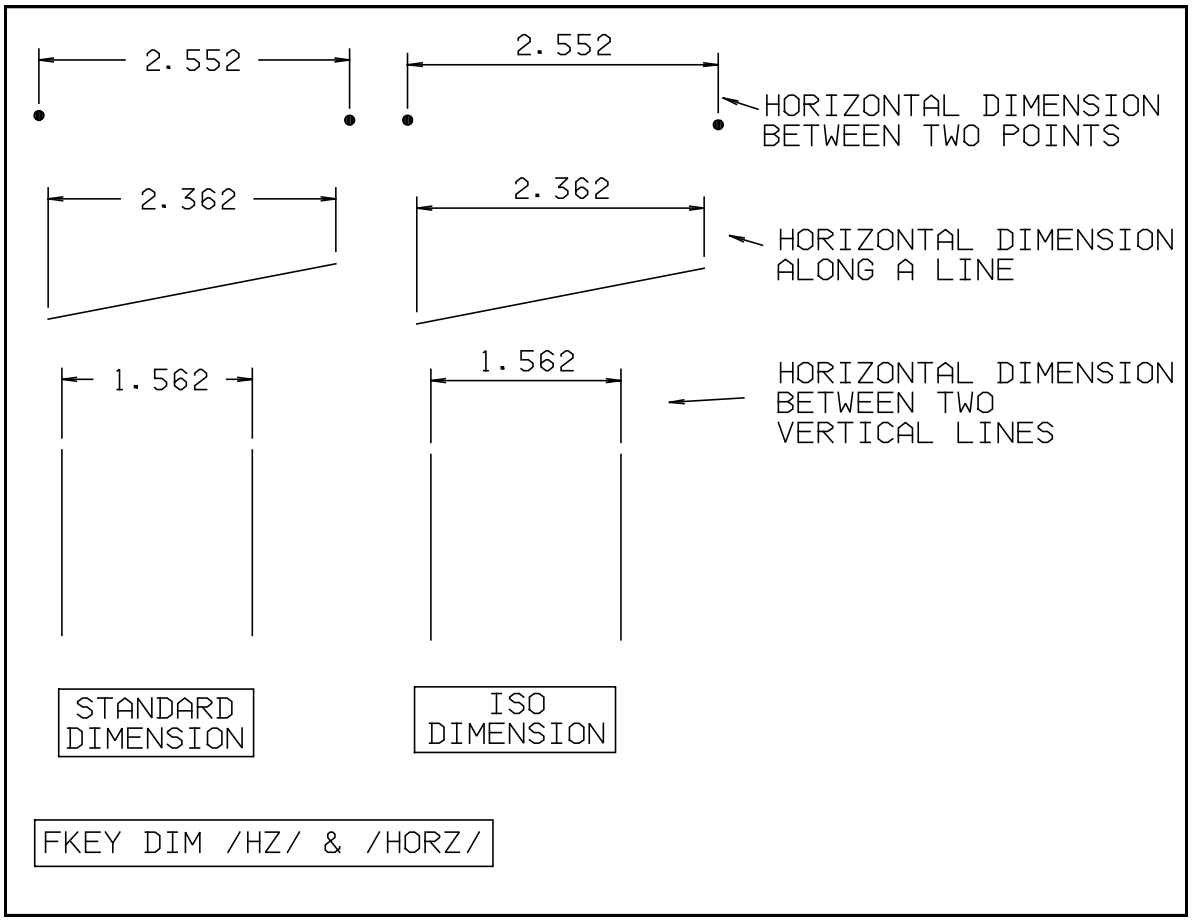

Figure 5 Examples of horizontal dimensions

We will create the dimensions shown in Figure 5 above. It is assumed that the dimensioning standard is ISO. (Check FKey FILES submenu /UNITS/)

1) HORIZONTAL DIMENSION BETWEEN TWO POINTS:

To create a horizontal dimension between two points, do the following:

1. SELECT FKey DIM

2. SELECT submenu /HORZ/ (if it is not already underlined)

   a. The menu prompt ***Sel line or pt*** appears on the menu prompt line near the top of the screen, and the message ***YN datum*** appears on the message line, also near the top of the screen.

3. SELECT the first point

   a. The menu prompt ***Sel point 2 or line 2*** appears on the menu prompt line near the top of the screen.

4. SELECT the second point

   a. The menu prompt ***Sel point or dimension / Ind dimension center*** appears on the menu prompt line, and the message ***Key dec plc =2*** appears on the message line.

5. You can now do any of the following:

   a. SELECT a point about which the dimension will align.

   b. SELECT an existing dimension, and the new dimension will line up with it.

   c. INDICATE the dimension center and the dimension will appear where indicated.

   d. KEY the number of decimal places required. The message line will change to reflect the number of decimal places.

6. After selecting a point, or existing dimension, or indicating a dimension center, the new dimension will appear, and the menu prompt will change to ***Sel line or point / YN erase*** and the message line will read ***Key text/Sel dim to flip/Ind dim ctr***. The following submenu will also appear at the bottom of the screen:

   /HORZ/DIM-LN/EXT-LN/TXT-HT/OUT-SCL/DECPL/TXT/JUST/LDR/OBL/ /RTN/

7. SELECT the submenu options to:

    a. Change the dimension line
    b. Change the extension line
    c. Change the text height
    d. Change the dimension to out-of-scale
    e. Change the number of decimal places, or change to fractions
    f. Add text to the dimension
    g. Justify the dimension
    h. Add a leader line to the dimension
    i. Slant the dimension lines

2) HORIZONTAL DIMENSION ALONG A LINE:

To create a horizontal dimension along a line, do the following:

1. SELECT FKey DIM

2. SELECT submenu /HORZ/ (if it is not already underlined)

    a. The menu prompt ***Sel line or pt*** appears on the menu prompt line near the top of the screen, and the message ***YN datum*** appears on the message line, also near the top of the screen.

3. SELECT the line

    a. The menu prompt ***Sel point or dimension / Ind dim center*** appears on the menu prompt line near the top of the screen, and the message ***Key dec plc = 3*** appears on the message line, also near the top of the screen. .

4. You can now do any of the following:

    a. SELECT a point about which the dimension will align.

    b. SELECT an existing dimension, and the new dimension will line up with it.

    c. INDICATE the dimension center and the dimension will appear where indicated.

d. KEY the number of decimal places required. The message line will change to reflect the number of decimal places.

5. After selecting a point, or existing dimension, or indicating a dimension center, the new dimension will appear, and the menu prompt will change to ***Sel line or point / YN erase*** and the message line will read ***Key text/Sel dim to flip/Ind dim ctr***. The following submenu will also appear at the bottom of the screen:

/HORZ/DIM-LN/EXT-LN/TXT-HT/OUT-SCL/DECPL/TXT/JUST/LDR/OBL/ /RTN/

6. SELECT the submenu options to:

a. Change the dimension line
b. Change the extension line
c. Change the text height
d. Change the dimension to out-of-scale
e. Change the number of decimal places, or change to fractions
f. Add text to the dimension
g. Justify the dimension
h. Add a leader line to the dimension
i. Slant the dimension lines

3) HORIZONTAL DIMENSION BETWEEN TWO VERTICAL LINES:

To create a horizontal dimension between two vertical lines, perform the same steps as item 1.

FKey DIM

SUBMENU /VT/

AND

SUBMENU /VERT/

FKEY DIM SUBMENU /VT/ (STANDARD DIM) AND /VERT/ (ISO DIM):

The menu prompts for both STANDARD and ISO dimensions are very similar, so we will only look at the ISO dimensions.

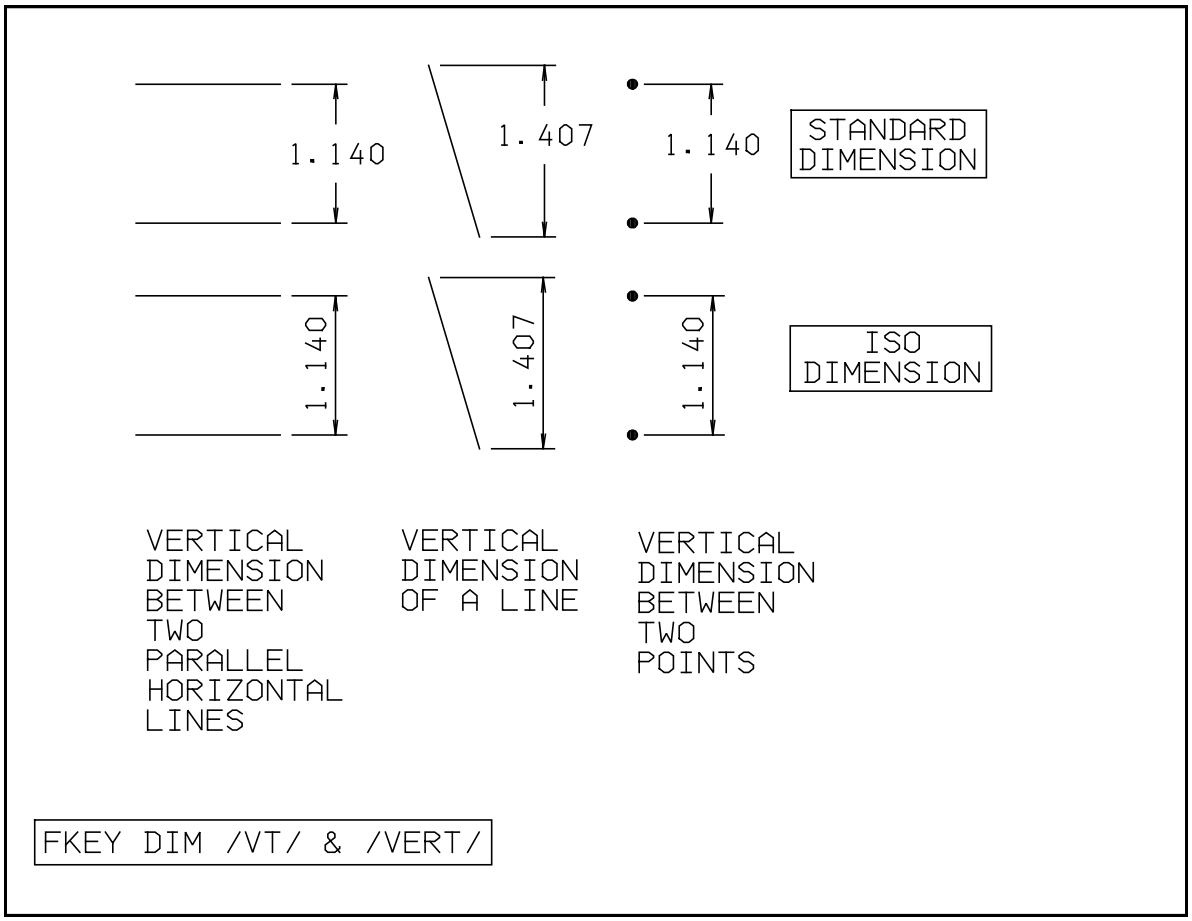

Figure 6 Examples of vertical dimensions

We will create the dimensions shown in Figure 6 above. It is assumed that the dimensioning standard is ISO. (Check FKey FILES submenu /UNITS/ and make sure that the word **ISO** has an asterisk beside it).

4) VERTICAL DIMENSION BETWEEN TWO POINTS:

To create a vertical dimension between two points, do the following:

1. SELECT FKey DIM

2. SELECT submenu /VERT/ (if it is not already underlined)

   a. The menu prompt ***Sel line or pt*** appears on the menu prompt line near the top of the screen, and the message ***YN datum*** appears on the message line, also near the top of the screen.

3. SELECT the first point

   a. The menu prompt ***Sel point 2 or line 2*** appears on the menu prompt line near the top of the screen.

4. SELECT the second point

   a. The menu prompt ***Sel point or dimension / Ind dimension center*** appears on the menu prompt line, and the message ***Key dec plc =2*** appears on the message line.

5. You can now do any of the following:

   a. SELECT a point about which the dimension will align.

   b. SELECT an existing dimension, and the new dimension will line up with it.

   c. INDICATE the dimension center and the dimension will appear where indicated.

   d. KEY the number of decimal places required. The message line will change to reflect the number of decimal places.

6. After selecting a point, or existing dimension, or indicating a dimension center, the new dimension will appear, and the menu prompt will change to ***Sel line or point / YN erase*** and the message line will read ***Key text/Sel dim to flip/Ind dim ctr***. The following submenu will also appear at the bottom of the screen:

   /VERT/DIM-LN/EXT-LN/TXT-HT/OUT-SCL/DECPL/TXT/JUST/LDR/OBL/ /RTN/

7. SELECT the submenu options to:

    a. Change the dimension line
    b. Change the extension line
    c. Change the text height
    d. Change the dimension to out-of-scale
    e. Change the number of decimal places, or change to fractions
    f. Add text to the dimension
    g. Justify the dimension
    h. Add a leader line to the dimension
    i. Slant the dimension lines

5) VERTICAL DIMENSION ALONG A LINE:

To create a vertical dimension along a line, do the following:

1. SELECT FKey DIM

2. SELECT submenu /VERT/ (if it is not already underlined)

    a. The menu prompt ***Sel line or pt*** appears on the menu prompt line near the top of the screen, and the message ***YN datum*** appears on the message line, also near the top of the screen.

3. SELECT the line

    a. The menu prompt ***Sel point or dimension / Ind dim center*** appears on the menu prompt line near the top of the screen, and the message ***Key dec plc = 3*** appears on the message line, also near the top of the screen. .

4. You can now do any of the following:

    a. SELECT a point about which the dimension will align.

    b. SELECT an existing dimension, and the new dimension will line up with it.

    c. INDICATE the dimension center and the dimension will appear where indicated.

d. KEY the number of decimal places required. The message line will change to reflect the number of decimal places.

5. After selecting a point, or existing dimension, or indicating a dimension center, the new dimension will appear, and the menu prompt will change to ***Sel line or point / YN erase*** and the message line will read ***Key text/Sel dim to flip/Ind dim ctr***. The following submenu will also appear at the bottom of the screen:

/VERT/DIM-LN/EXT-LN/TXT-HT/OUT-SCL/DECPL/TXT/JUST/LDR/OBL/ /RTN/

6. SELECT the submenu options to:

a. Change the dimension line
b. Change the extension line
c. Change the text height
d. Change the dimension to out-of-scale
e. Change the number of decimal places, or change to fractions
f. Add text to the dimension
g. Justify the dimension
h. Add a leader line to the dimension
i. Slant the dimension lines

6) VERTICAL DIMENSION BETWEEN TWO VERTICAL LINES:

To create a vertical dimension between two vertical lines, perform the same steps as item 1.

FKey DIM

SUBMENU /PR/

AND

SUBMENU /PARAL/

FKEY DIM SUBMENU /PR/ (STANDARD DIM) AND /PARAL/ (ISO DIM):

The menu prompts for both STANDARD and ISO dimensions are very similar, so we will only look at the ISO dimensions.

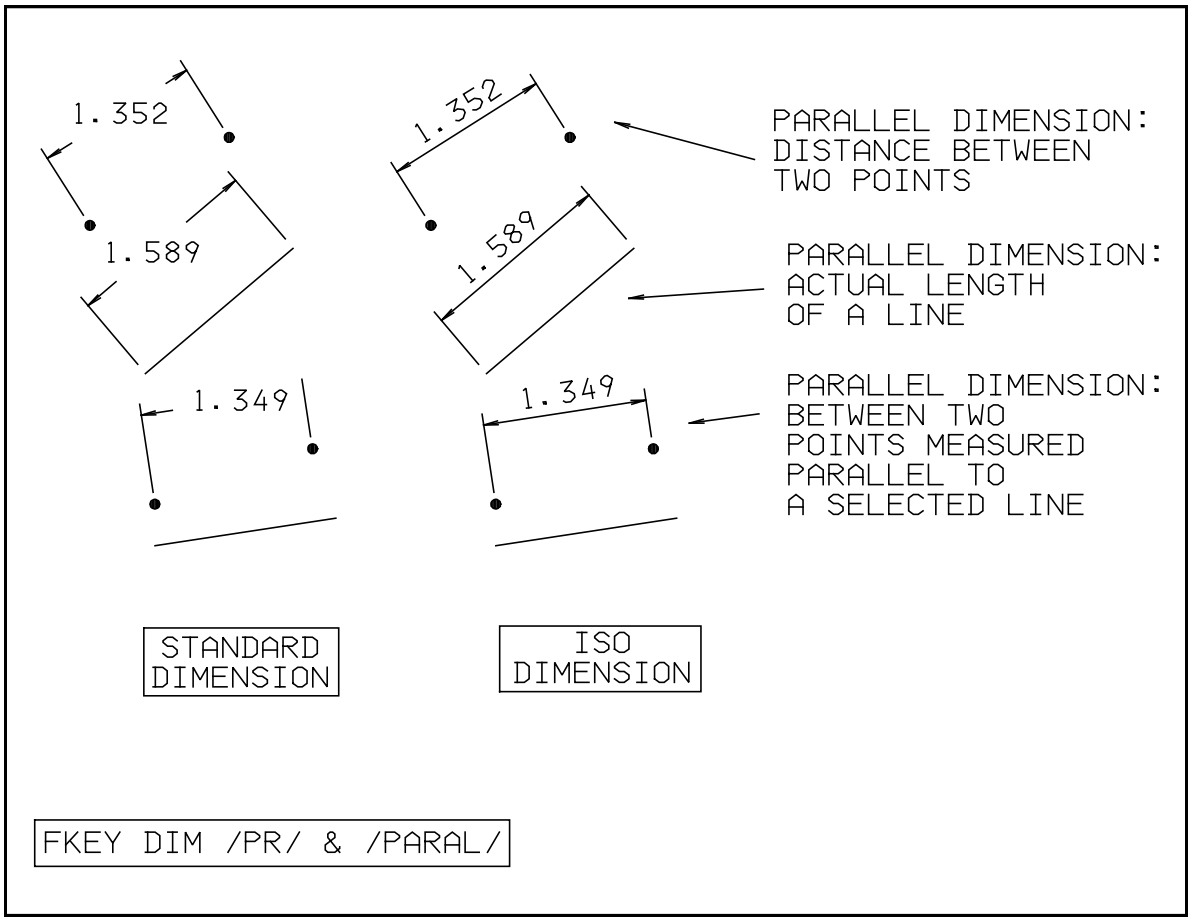

Figure 7 Examples of parallel dimensions

We will create the dimensions shown in Figure 7 above. It is assumed that the dimensioning standard is ISO. (Check FKey FILES submenu /UNITS/)

7) PARALLEL DIMENSION BETWEEN TWO POINTS:

To create a parallel dimension between two points, do the following:

1. SELECT FKey DIM

2. SELECT submenu /PARAL/ (if it is not already underlined)

   a. The menu prompt ***Sel orientation line / Sel point 1 of point-point*** appears on the menu prompt line near the top of the screen.

3. SELECT the first point

   a. The menu prompt ***Sel point 2*** appears on the menu prompt line near the top of the screen.

4. SELECT the second point

   a. The menu prompt ***Sel point or dimension / Ind dimension center*** appears on the menu prompt line, and the message ***Key dec plc =2*** appears on the message line.

5. You can now do any of the following:

   a. SELECT a point about which the dimension will align.

   b. SELECT an existing dimension, and the new dimension will line up with it.

   c. INDICATE the dimension center and the dimension will appear where indicated.

   d. KEY the number of decimal places required. The message line will change to reflect the number of decimal places.

6. After selecting a point, or existing dimension, or indicating a dimension center, the new dimension will appear, and the menu prompt will change to ***Sel orientation line or point 1 / YN erase*** and the message line will read ***Key text/Sel dim to flip/Ind dim ctr***. The following submenu will also appear at the bottom of the screen:

   /PARAL/DIM-LN/EXT-LN/TXT-HT/OUT-SCL/DECPL/TXT/JUST/LDR/OBL/ /RTN/

7. SELECT the submenu options to:

    a. Change the dimension line
    b. Change the extension line
    c. Change the text height
    d. Change the dimension to out-of-scale
    e. Change the number of decimal places, or change to fractions
    f. Add text to the dimension
    g. Justify the dimension
    h. Add a leader line to the dimension
    i. Slant the dimension lines

8) PARALLEL DIMENSION ALONG A LINE (i.e. the actual length of the line):

To create a parallel dimension along a line, do the following:

1. SELECT FKey DIM

2. SELECT submenu /PARAL/ (if it is not already underlined)

    a. The menu prompt ***Sel orientation line / Sel point 1 of point-point*** appears on the menu prompt line near the top of the screen.

3. SELECT the line

    a. The menu prompt ***Sel point 1 / YN Sel dimensions center*** appears on the menu prompt line near the top of the screen, and the message ***Sel dim / Ind dim ctr / Key dec plc =*** appears on the message line, also near the top of the screen. .

4. You can now do any of the following:

    a. SELECT a point about which the dimension will align.

    b. SELECT an existing dimension, and the new dimension will line up with it.

    c. INDICATE the dimension center and the dimension will appear where indicated.

d. KEY the number of decimal places required. The message line will change to reflect the number of decimal places.

5. After selecting a point, or existing dimension, or indicating a dimension center, the new dimension will appear, and the menu prompt will change to ***Sel orientation line or point 1 / YN erase*** and the message line will read ***Key text/Sel dim to flip/Ind dim ctr***. The following submenu will also appear at the bottom of the screen:
/PARAL/DIM-LN/EXT-LN/TXT-HT/OUT-SCL/DECPL/TXT/JUST/LDR/OBL/ /RTN/

6. SELECT the submenu options to:

   a. Change the dimension line
   b. Change the extension line
   c. Change the text height
   d. Change the dimension to out-of-scale
   e. Change the number of decimal places, or change to fractions
   f. Add text to the dimension
   g. Justify the dimension
   h. Add a leader line to the dimension
   i. Slant the dimension lines

9) PARALLEL DIMENSION BETWEEN TWO POINTS MEASURED PARALLEL TO A SELECTED LINE:

To create a parallel dimension between two points, measured parallel to a selected line, do the following:

1. SELECT FKey DIM

2. SELECT submenu /PARAL/ (if it is not already underlined)

   a. The menu prompt ***Sel orientation line / Sel point 1 of point-point*** appears on the menu prompt line near the top of the screen.

3. SELECT the orientation line. The dimension between the points will be created parallel to this line.

   a. The menu prompt ***Sel point 1 / YN Sel dimensions center*** appears on the menu prompt line near the top of the screen, and the message ***Sel dim / Ind dim ctr / Key dec plc =*** appears on the message line, also near the top of the screen. .

4. SELECT point 1.

   a. The menu prompt ***Sel point 2*** appears on the menu prompt line near the top of the screen.

5. SELECT point 2.

   a. The menu prompt ***Sel point or dimension / Ind dimension center*** appears on the menu prompt line near the top of the screen, and the message ***Key decimal plc = 2*** appears on the message line, also near the top of the screen.

6. You can now do any of the following:

   a. SELECT a point about which the dimension will align.

   b. SELECT an existing dimension, and the new dimension will line up with it.

   c. INDICATE the dimension center and the dimension will appear where indicated.

   d. KEY the number of decimal places required. The message line will change to reflect the number of decimal places.

7. After selecting a point, or existing dimension, or indicating a dimension center, the new dimension will appear, and the menu prompt will change to ***Sel orientation line or point 1 / YN erase*** and the message line will read ***Key text/Sel dim to flip/Ind dim ctr***. The following submenu will also appear at the bottom of the screen:

   /PARAL/DIM-LN/EXT-LN/TXT-HT/OUT-SCL/DECPL/TXT/JUST/LDR/OBL/ /RTN/

8. SELECT the submenu options to:

   a. Change the dimension line
   b. Change the extension line
   c. Change the text height
   d. Change the dimension to out-of-scale
   e. Change the number of decimal places, or change to fractions
   f. Add text to the dimension
   g. Justify the dimension
   h. Add a leader line to the dimension
   i. Slant the dimension lines

FKey DIM

SUBMENU /NM/

AND

SUBMENU /NORM/

FKEY DIM SUBMENU /NM/ (STANDARD DIM) AND /NORM/ (ISO DIM):

The menu prompts for both STANDARD and ISO dimensions are very similar, so we will only look at the ISO dimensions.

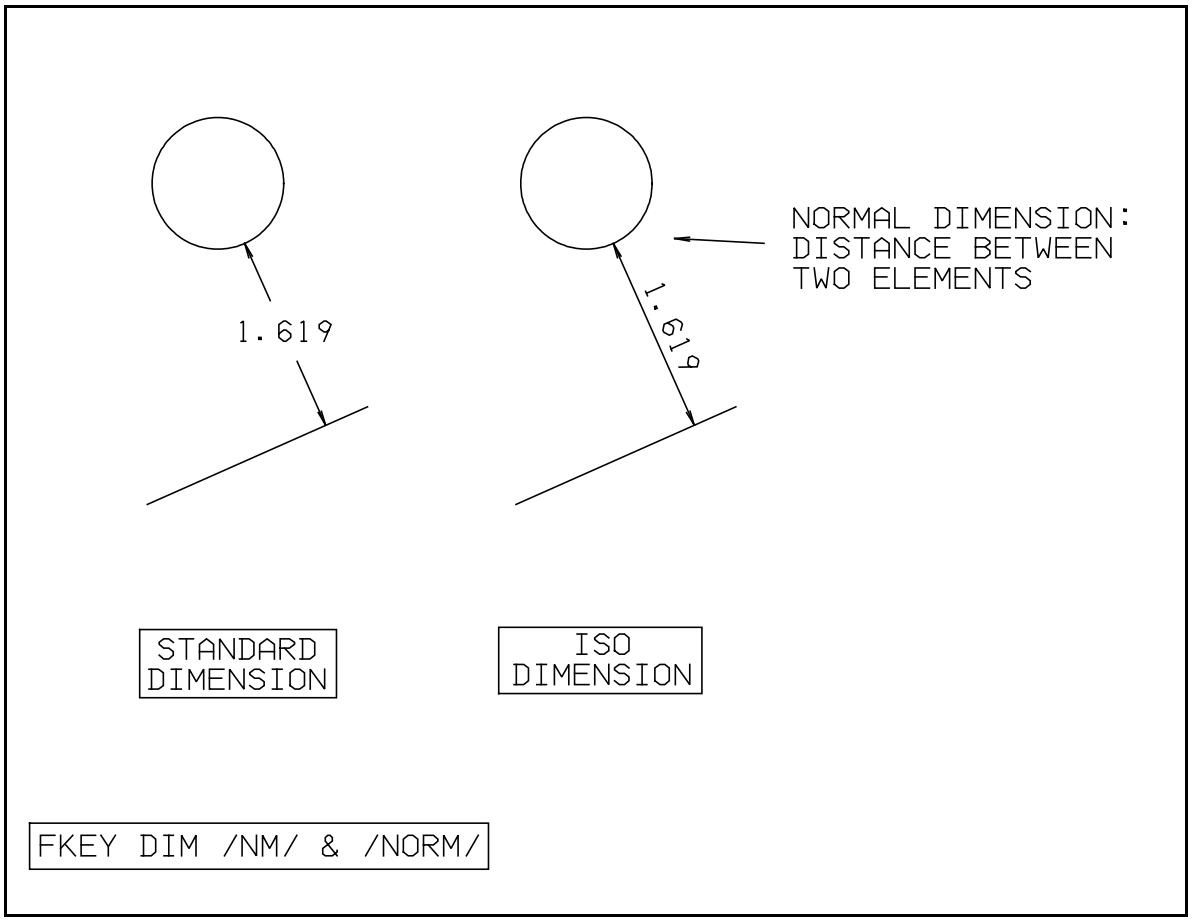

Figure 8 Examples of normal dimensions

We will create the dimensions shown in Figure 8 above. It is assumed that the dimensioning standard is ISO. (Check FKey FILES submenu /UNITS/)

10) NORMAL DIMENSION BETWEEN TWO ELEMENTS:

To create a normal dimension between two elements, do the following:

1. SELECT FKey DIM

2. SELECT submenu /NORM/ (if it is not already underlined)

   a. The menu prompt ***Sel element 1*** appears on the menu prompt line near the top of the screen.

3. SELECT the first element

   a. The menu prompt ***Sel element 2*** appears on the menu prompt line near the top of the screen.

4. SELECT the second element.

   a. The menu prompt ***Sel point or dimension / Ind dimension center*** appears on the menu prompt line, and the message ***Key dec plc =2*** (Note: Quantity may vary) appears on the message line.

5. You can now do any of the following:

   a. SELECT a point about which the dimension will align.

   b. SELECT an existing dimension, and the new dimension will line up with it.

   c. INDICATE the dimension center and the dimension will appear where indicated.

   d. KEY the number of decimal places required. The message line will change to reflect the number of decimal places.

6. After selecting a point, or existing dimension, or indicating a dimension center, the new dimension will appear, and the menu prompt will change to ***Sel element 1 / YN erase*** and the message line will read ***Key text/Sel dim to flip/Ind dim ctr***. The following submenu will also appear at the bottom of the screen:

   /NORM/DIM-LN/EXT-LN/TXT-HT/OUT-SCL/DECPL/TXT/JUST/LDR/OBL/ /RTN/

7. SELECT the submenu options to:

   a. Change the dimension line
   b. Change the extension line
   c. Change the text height
   d. Change the dimension to out-of-scale
   e. Change the number of decimal places, or change to fractions
   f. Add text to the dimension
   g. Justify the dimension
   h. Add a leader line to the dimension
   i. Slant the dimension lines

FKey DIM

SUBMENU /RD/

AND

SUBMENU /RAD/

FKEY DIM SUBMENU /RD/ (STANDARD DIM) AND /RAD/ (ISO DIM):

The menu prompts for both STANDARD and ISO dimensions are very similar, so we will only look at the ISO dimensions.

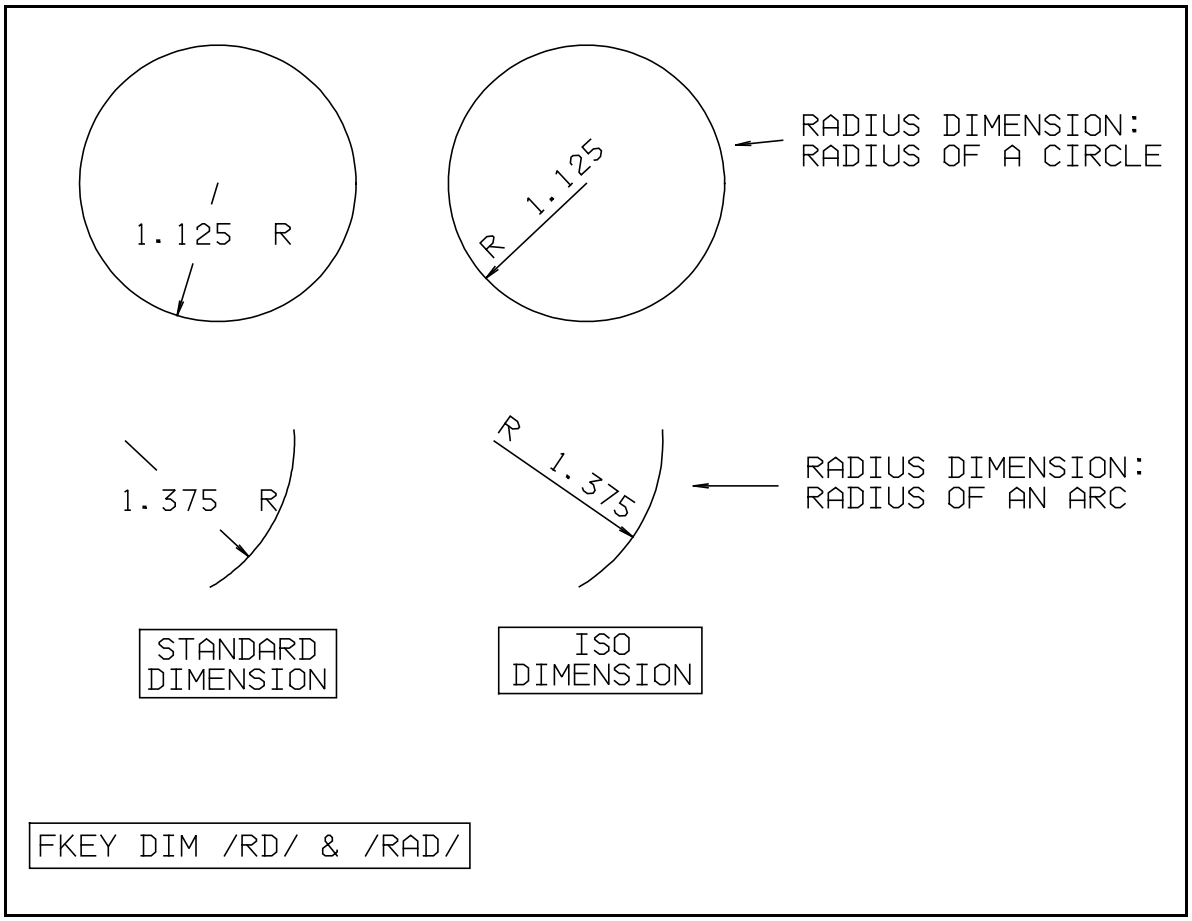

Figure 9 Examples of radius dimensions

We will create the dimensions shown in Figure 9 above. It is assumed that the dimensioning standard is ISO. (Check FKey FILES submenu /UNITS/)

11) RADIUS DIMENSION OF AN ARC OR CIRCLE:

To create a radius dimension of an arc or circle, do the following:

1. SELECT FKey DIM

2. SELECT submenu /RAD/ (if it is not already underlined)

   a. The menu prompt ***Sel circle*** appears on the menu prompt line near the top of the screen.

3. SELECT an arc or circle

   a. The menu prompt ***Sel or ind dimension center*** appears on the menu prompt line, and the message ***Key dec plc =2*** appears on the message line.

4. You can now do any of the following:

   a. SELECT a point about which the dimension will align.

   b. INDICATE the dimension center and the dimension will appear where indicated.

   c. KEY the number of decimal places required. The message line will change to reflect the number of decimal places.

5. After selecting a point, or indicating a dimension center, the new dimension will appear, and the menu prompt will change to ***Sel circle / Sel dimension center / YN erase*** and the message line will read ***Key text/Sel dim to flip/Ind dim ctr***. The following submenu will also appear at the bottom of the screen:

   /RAD/DIM-LN/EXT-LN/TXT-HT/OUT-SCL/DECPL/TXT/JUST/LDR/OBL/ /RTN/

6. SELECT the submenu options to:

   a. Change the dimension line
   b. Change the extension line
   c. Change the text height
   d. Change the dimension to out-of-scale
   e. Change the number of decimal places, or change to fractions
   f. Add text to the dimension

g. Justify the dimension
h. Add a leader line to the dimension
i. Slant the dimension lines

FKey DIM

SUBMENU /DM/

AND

SUBMENU /DIA/

FKEY DIM SUBMENU /DM/ (STANDARD DIM) AND /DIA/ (ISO DIM):

The menu prompts for both STANDARD and ISO dimensions are very similar, so we will only look at the ISO dimensions.

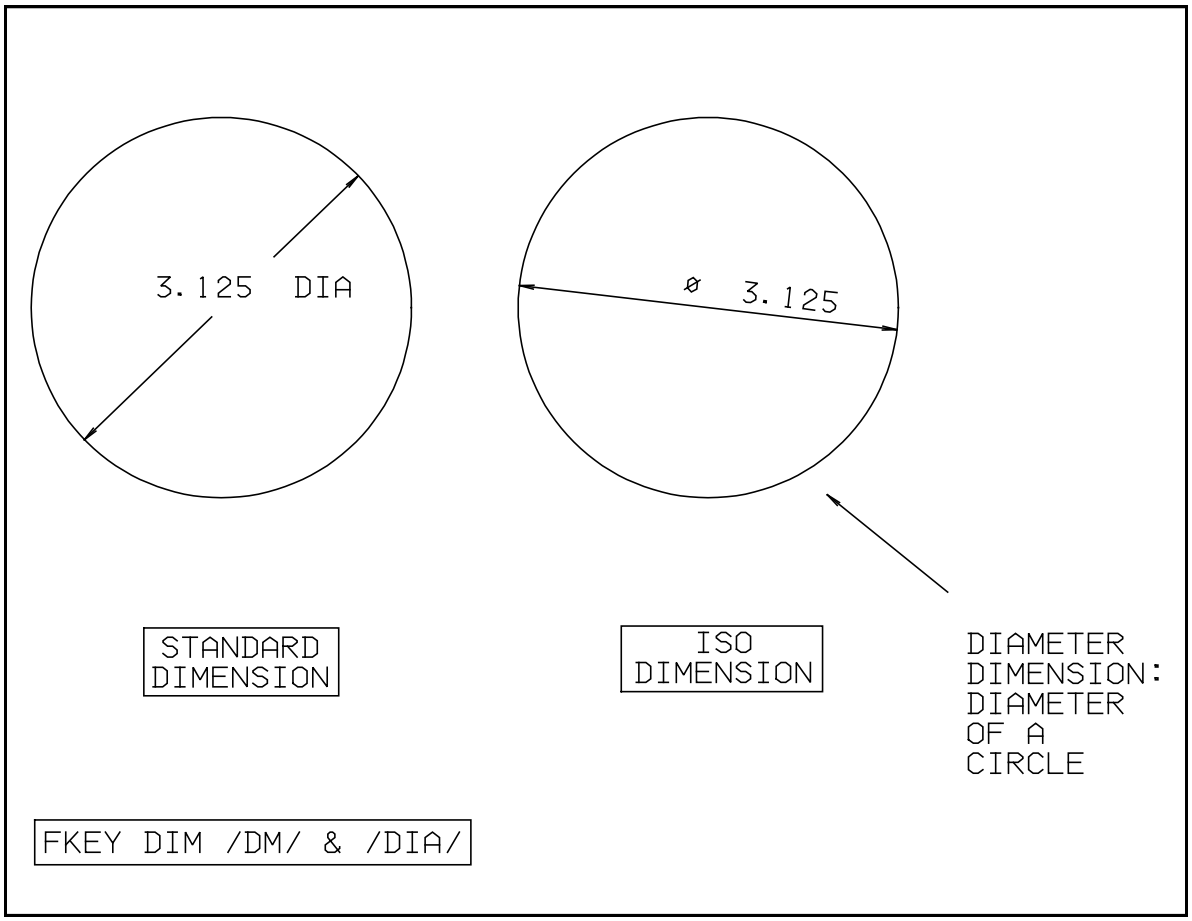

Figure 10 Examples of diameter dimensions

We will create the dimensions shown in Figure 10 above. It is assumed that the dimensioning standard is ISO. (Check FKey FILES submenu /UNITS/)

12) DIAMETER DIMENSION OF A CIRCLE:

To create a diameter dimension of a circle, do the following:

1. SELECT FKey DIM

2. SELECT submenu /RAD/ (if it is not already underlined)

   a. The menu prompt ***Sel circle*** appears on the menu prompt line near the top of the screen.

3. SELECT a circle

   a. The menu prompt ***Sel or ind dimension center*** appears on the menu prompt line, and the message ***Key dec plc =2*** appears on the message line.

4. You can now do any of the following:

   a. SELECT a point about which the dimension will align.

   b. INDICATE the dimension center and the dimension will appear where indicated.

   c. KEY the number of decimal places required. The message line will change to reflect the number of decimal places.

5. After selecting a point, or indicating a dimension center, the new dimension will appear, and the menu prompt will change to ***Sel circle / Sel dimension center / YN erase*** and the message line will read ***Key text/Sel dim to flip/Ind dim ctr***. The following submenu will also appear at the bottom of the screen:

   /RAD/DIM-LN/EXT-LN/TXT-HT/OUT-SCL/DECPL/TXT/JUST/LDR/OBL/ /RTN/

6. SELECT the submenu options to:

   a. Change the dimension line
   b. Change the extension line
   c. Change the text height
   d. Change the dimension to out-of-scale
   e. Change the number of decimal places, or change to fractions
   f. Add text to the dimension

g. Justify the dimension
h. Add a leader line to the dimension
i. Slant the dimension lines

FKey DIM

SUBMENU /AN/

AND

SUBMENU /ANG/

FKEY DIM SUBMENU /AN/ (STANDARD DIM) AND /ANG/ (ISO DIM):

The menu prompts for both STANDARD and ISO dimensions are very similar, so we will only look at the ISO dimensions.

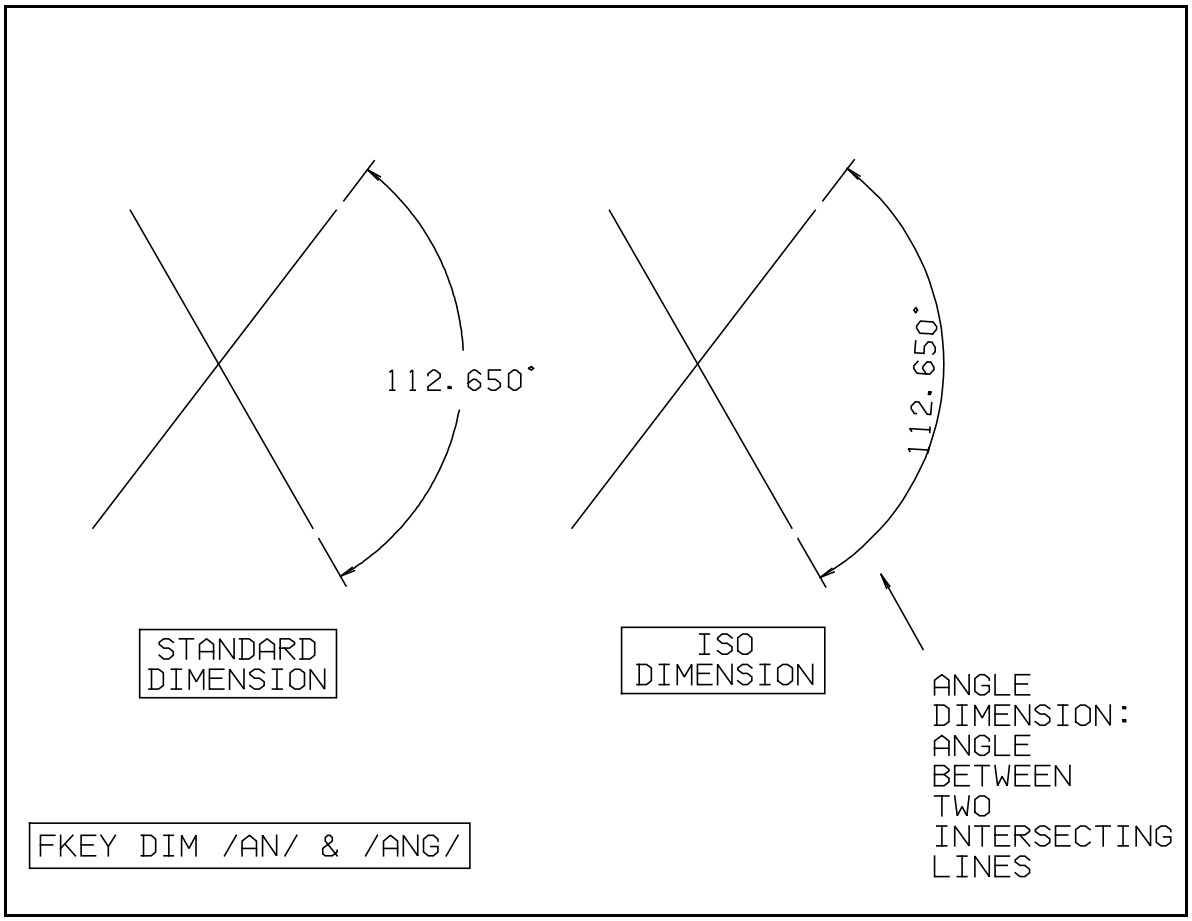

Figure 11 Examples of angle dimensions

We will create the dimensions shown in Figure 11 above. It is assumed that the dimensioning standard is ISO. (Check FKey FILES submenu /UNITS/)

13) ANGLE DIMENSION BETWEEN TWO INTERSECTING LINES:

To create an angle dimension between two intersecting lines, do the following:

1. SELECT FKey DIM

2. SELECT submenu /ANG/ (if it is not already underlined)

   a. The menu prompt ***Sel line / Key angle type or decimal place = -3*** appears on the menu prompt line near the top of the screen.

3. SELECT the first of two intersecting lines

   a. The menu prompt ***Ind end / Sel line 2*** appears on the menu prompt line.

4. INDICATE the end of the intersecting line the dimension is to start from. All dimensions run in the counter clockwise (CCW) direction from the indicated end of the first line to the indicated end of the second line.

   a. The menu prompt ***Sel line 2*** appears on the menu prompt line.

5. SELECT the second of two intersecting lines

   a. The menu prompt ***Ind end*** appears on the menu prompt line.

6. INDICATE the end of the second intersecting line. All dimensions run in the counter clockwise (CCW) direction from the indicated end of the first line to the indicated end of the second line.

   a. The menu prompt ***Sel ang or curv dim / Sel or ind dim ctr*** appears on the menu prompt line.

7. You can now do any of the following:

   a. SELECT an existing dimension and the new dimension will line up with it.

   b. SELECT a point about which the dimension will align.

   c. INDICATE the dimension center and the dimension will appear where indicated.

8. After selecting a point, or indicating a dimension center, the new dimension will appear, and the menu prompt will change to ***Sel ln, dim ctr, ang, or curv dim / YN erase*** and the message line will read ***Key text/Sel dim to flip/Ind dim ctr***. The following submenu will also appear at the bottom of the screen:

   /ANG/DIM-LN/EXT-LN/TXT-HT/OUT-SCL/DECPL/TXT/JUST/LDR/OBL/ /RTN/

9. SELECT the submenu options to:

   a. Change the dimension line
   b. Change the extension line
   c. Change the text height
   d. Change the dimension to out-of-scale
   e. Change the number of decimal places, or change to fractions
   f. Add text to the dimension
   g. Justify the dimension
   h. Add a leader line to the dimension
   i. Slant the dimension lines

An angular dimensioning sample is shown in Figure 12 on page 49.

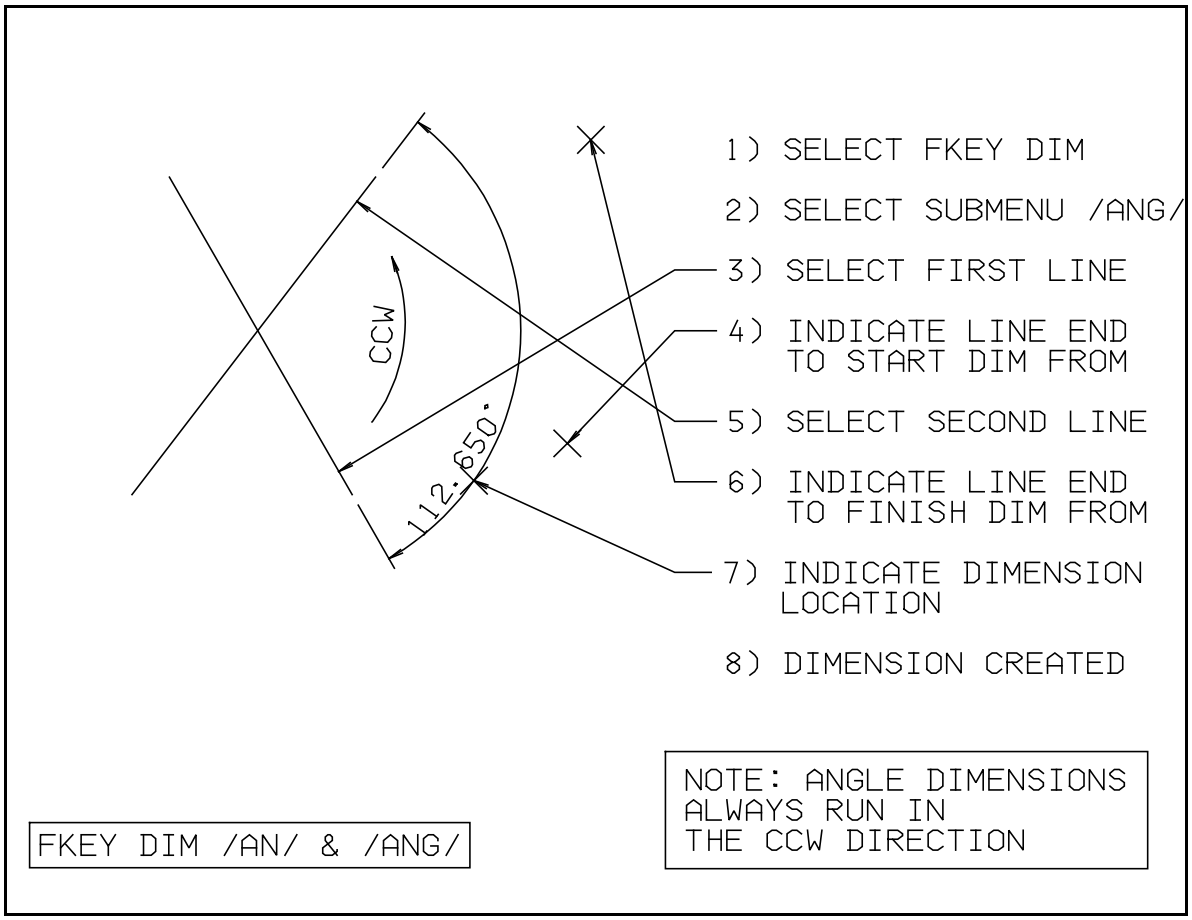

Figure 12 An angular dimensioning example.

FKey DIM

SUBMENU /CV/

AND

SUBMENU /CRV/

FKEY DIM SUBMENU /CV/ (STANDARD DIM) AND /CRV/ (ISO DIM):

The menu prompts for both STANDARD and ISO dimensions are very similar, so we will only look at the ISO dimensions.

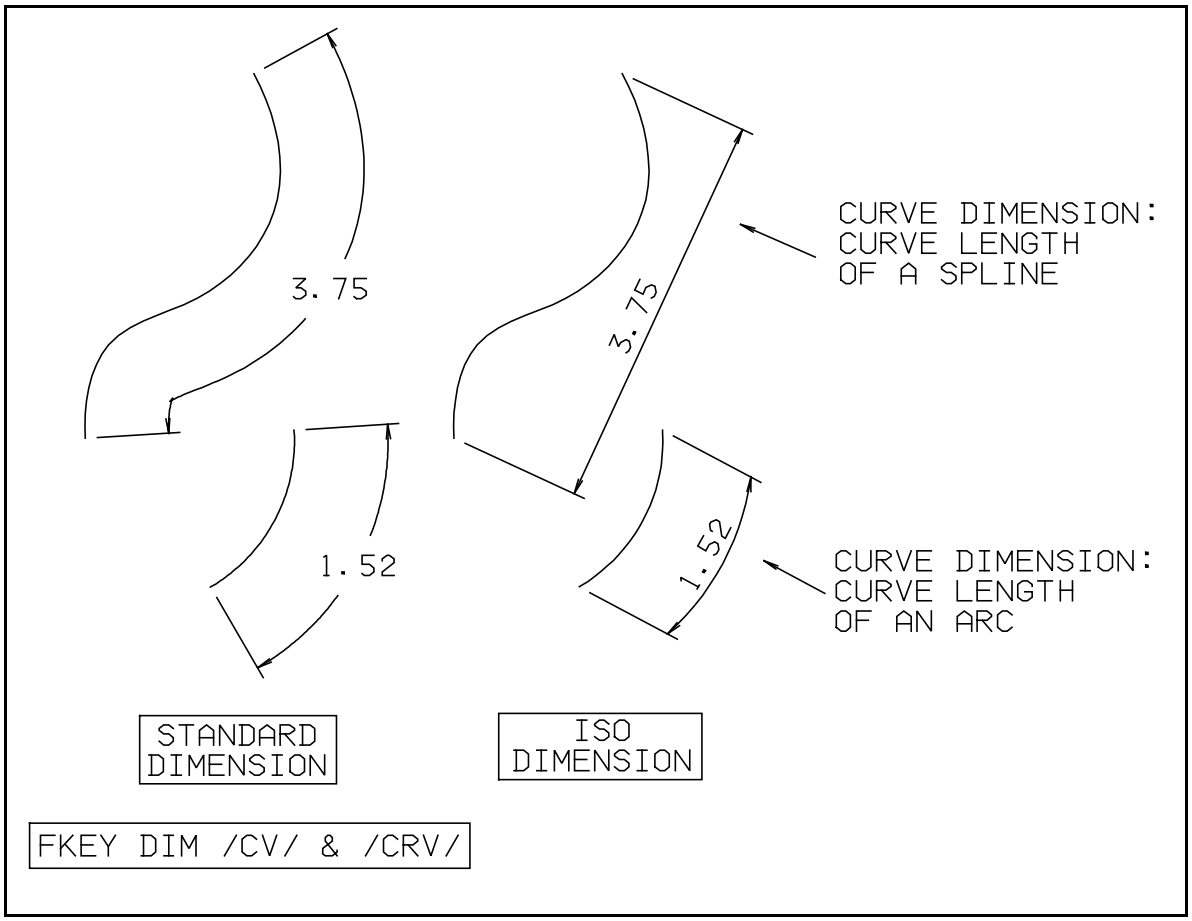

Figure 13 Examples of curve dimensions

We will create the dimensions shown in 52 above. It is assumed that the dimensioning standard is ISO. (Check FKey FILES submenu /UNITS/). Note that both arcs and splines can have their curve length dimensioned.

14) CURVE DIMENSION OF AN ARC OR SPLINE:

To create a curve dimension of an arc or spline, do the following:

1. SELECT FKey DIM

2. SELECT submenu /CRV/ (if it is not already underlined)

   a. The menu prompt ***Sel circle or spline*** appears on the menu prompt line near the top of the screen.

3. SELECT a circle or spline

   a. The menu prompt ***Sel pt, ang, or curv dim / YN Sel dim ctr*** appears on the menu prompt line, and the message ***Ind dim ctr / Key dec plc =2*** appears on the message line.

4. You can now do any of the following:

   a. SELECT an existing dimension and the new dimension will line up with it.

   b. SELECT a point about which the dimension will align.

   c. INDICATE the dimension center and the dimension will appear where indicated.

   d. KEY the number of decimal places required. The message line will change to reflect the number of decimal places.

5. After selecting a point, or indicating a dimension center, the new dimension will appear, and the menu prompt will change to ***Sel cir, dim ctr, ang, or curv dim / YN erase*** and the message line will read ***Key text/Sel dim to flip/Ind dim ctr***. The following submenu will also appear at the bottom of the screen:

   /CRV/DIM-LN/EXT-LN/TXT-HT/OUT-SCL/DECPL/TXT/JUST/LDR/OBL/ /RTN/

6. SELECT the submenu options to:

   a. Change the dimension line
   b. Change the extension line
   c. Change the text height

d. Change the dimension to out-of-scale
e. Change the number of decimal places, or change to fractions
f. Add text to the dimension
g. Justify the dimension
h. Add a leader line to the dimension
i. Slant the dimension lines

FKey DIM

SUBMENU /CHAM/

FKEY DIM /CRV/ (ISO DIM):

This dimension type is only available in ISO dimension.

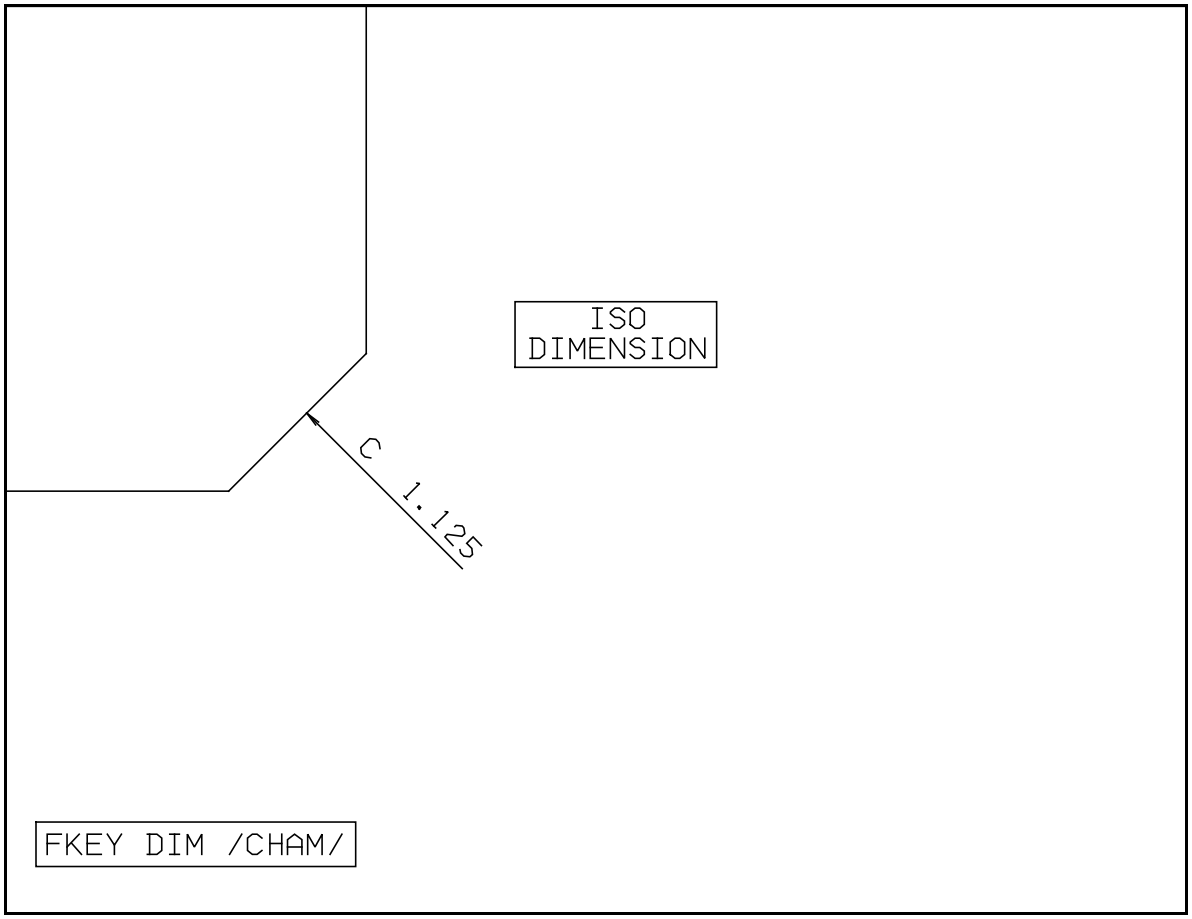

Figure 14 Examples of chamfer dimensions

We will create the dimensions shown in Figure 14 above. It is assumed that the dimensioning standard is ISO. (Check FKey FILES submenu /UNITS/).

15) CHAMFER DIMENSION OF AN ARC OR SPLINE:

To create a chamfer dimension of an arc or spline, do the following:

1. SELECT FKey DIM

2. SELECT submenu /CHAM/ (if it is not already underlined)

   a. The menu prompt ***Sel chamfer line*** appears on the menu prompt line near the top of the screen.

3. SELECT the chamfer line

   a. The menu prompt ***Sel dimension / Sel or ind dimension center*** appears on the menu prompt line, and the message ***Key dec plc =2*** appears on the message line.

4. You can now do any of the following:

   a. SELECT an existing dimension and the new dimension will line up with it.

   b. SELECT a point about which the dimension will align.

   c. INDICATE the dimension center and the dimension will appear where indicated.

   d. KEY the number of decimal places required. The message line will change to reflect the number of decimal places.

5. After selecting a point, or indicating a dimension center, the new dimension will appear, and the menu prompt will change to ***Sel chamfer line / YN erase*** and the message line will read ***Key text/Sel dim to flip/Ind dim ctr***. The following submenu will also appear at the bottom of the screen:

   /CHAM/DIM-LN/EXT-LN/TXT-HT/OUT-SCL/DECPL/TXT/JUST/LDR/OBL/ /RTN/

6. SELECT the submenu options to:

   a. Change the dimension line
   b. Change the extension line
   c. Change the text height
   d. Change the dimension to out-of-scale

e. Change the number of decimal places, or change to fractions
f. Add text to the dimension
g. Justify the dimension
h. Add a leader line to the dimension
i. Slant the dimension lines

A SUMMARY OF

DIFFERENT DIMENSIONING

OPTIONS

There are many ways to modify the way a dimension is presented. These are called dimension options and can be found under FKey DIM submenu /SPEC/ (or /SP/ for standard dimension). When you first access submenu /SPEC/ you are presented with the display screen shown in

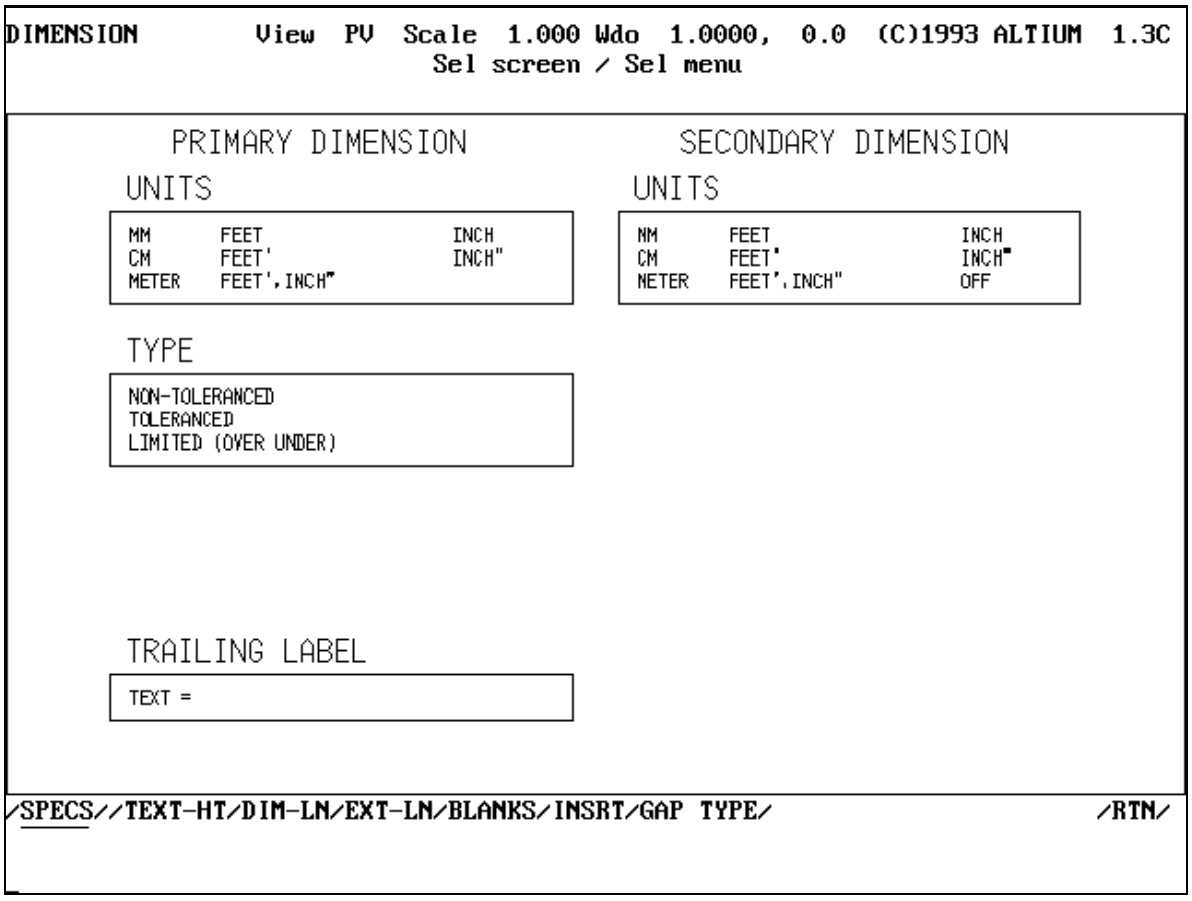

Figure 15 An example of the display screen shown when FKey DIM SubMenu /SPEC/ is selected

Figure 15 above. This screen appears configured for **NON-TOLERANCED** and secondary dimensions **OFF**. Should you select **TOLERANCED**, **LIMITED (OVER UNDER)** or secondary dimension to **MM** or **CM** or **METER** (or any other setting) then addition information will appear on the screen.

The submenu on Figure 15 allows you to set your dimensioning defaults. Note that a similar submenu appears after a dimension has been created (you may adjust your dimensioning options for the current dimension) and also when the /CHG/ submenu has been accessed to change an existing dimension.

The different dimensioning options available are summarized on the following two pages:

DIMENSIONING OPTIONS PAGE 1:

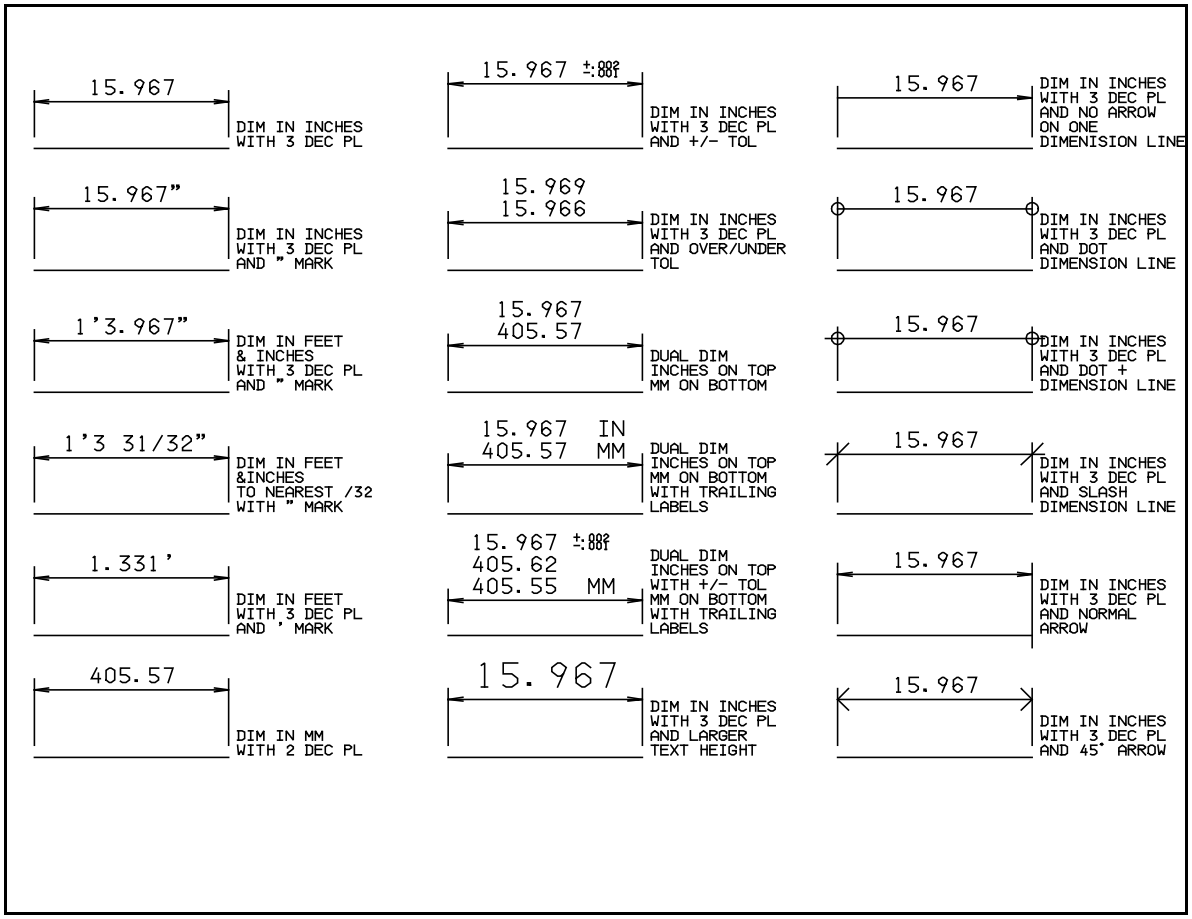

Figure 16 A summary of different dimensioning options *PAGE 1*

Note that you have different dimensioning results by keying in decimal places in different ways:

1) When prompted for decimal places key in a number between 0 and 8. This will provide results such as: 5.9375 and 11.38797174

2) When prompted for decimal places key in a *negative* number such as -2, -4, -8, -16, -32, -64, or -128. The negative sign tells the system to dimension using fractions, and the number is the denominator of the fraction. For example enter -16 for decimal places and the number 5.9375" will be dimensioned as 5 15/16".

DIMENSIONING OPTIONS PAGE 2:

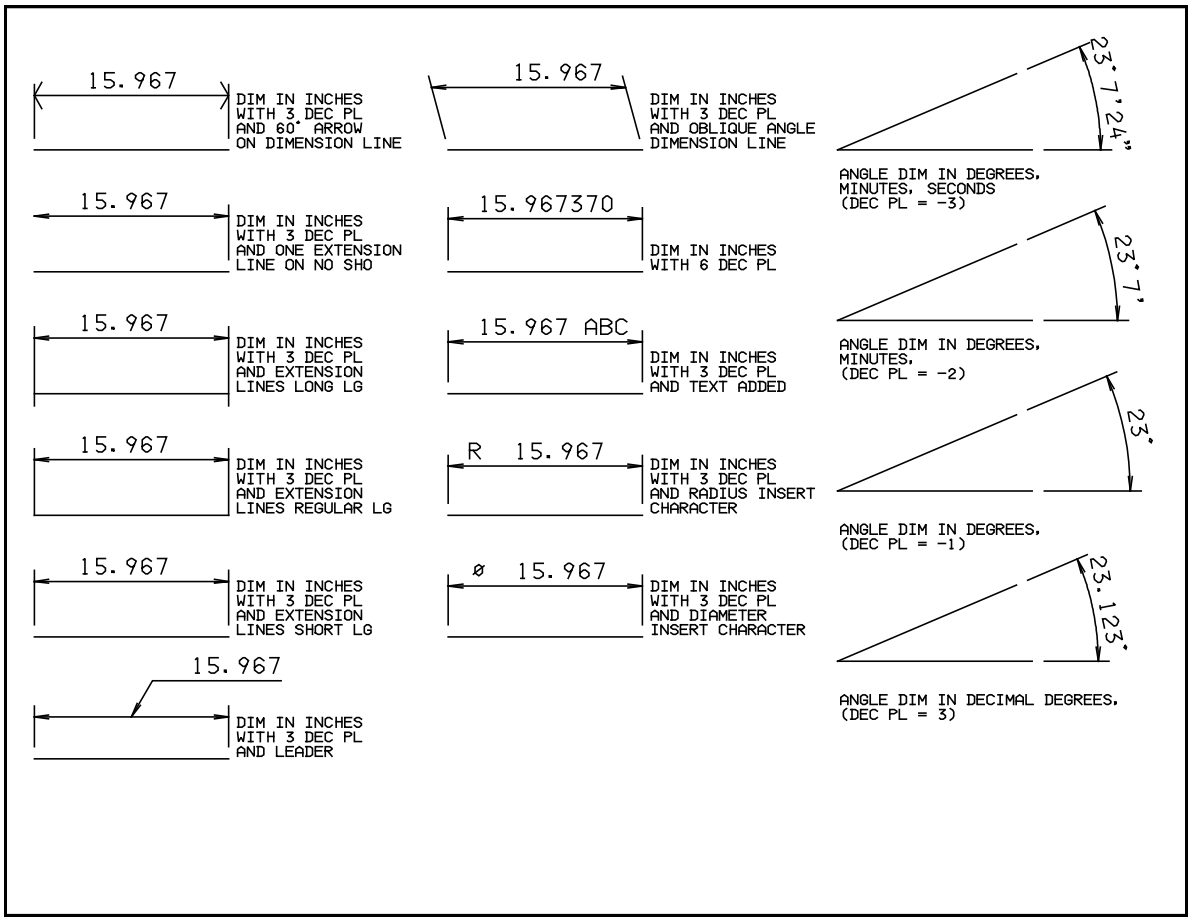

Figure 17 A summary of different dimensioning options *PAGE 2*

Note that angle dimensions can have different dimensioning results by keying in decimal places (a positive number between 0 and 3) or an angle type (a negative number between -1 and -3).

The different decimal place and angle type options are summarized in Figure 18 on page 63.

EXAMPLES OF DIFFERENT DECIMAL PLACES AND ANGLE TYPE SETTINGS:

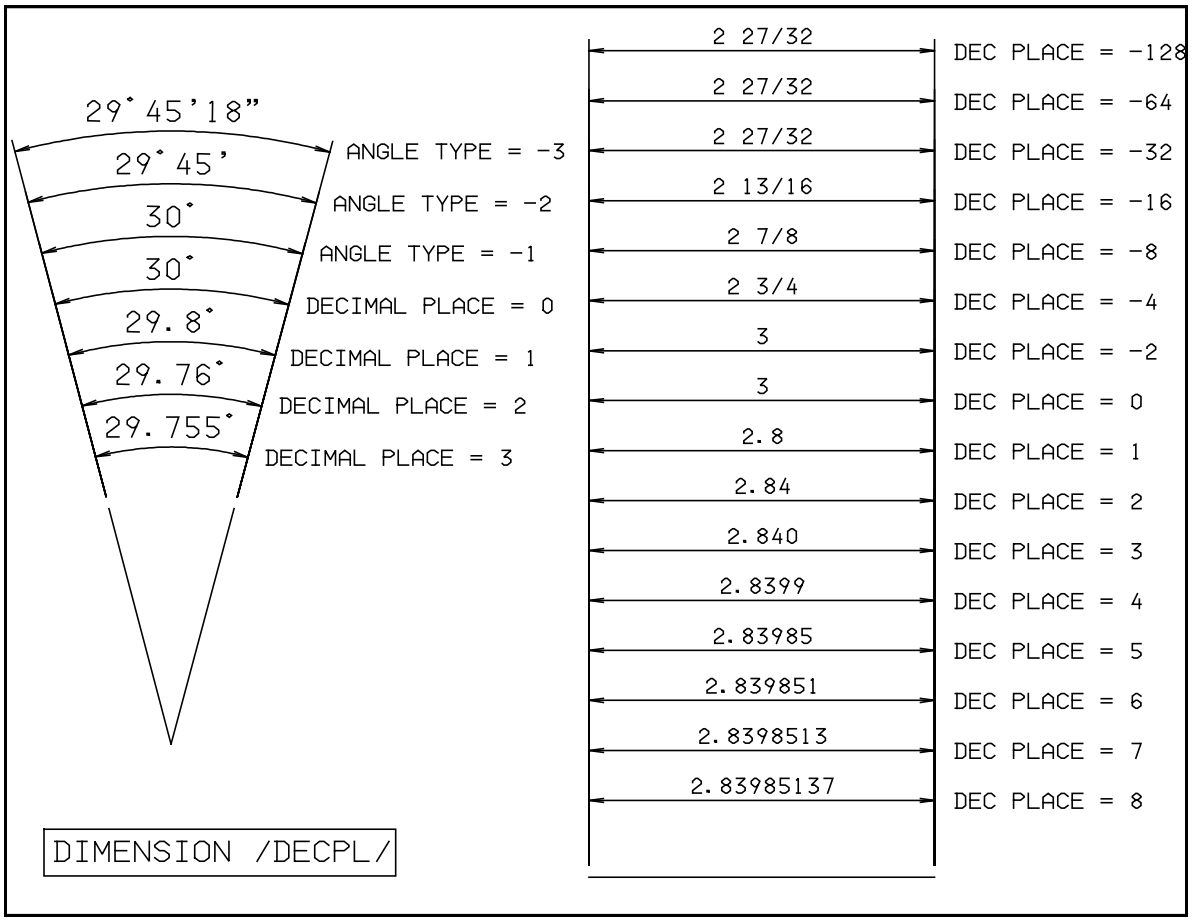

Figure 18 Examples of different decimal places and angle types.

THE FOUR DIMENSIONING CLASSES

PRIMARY DIMENSIONS (/PRIM/)

BASE DIMENSIONS (/BASE/)

CHAIN DIMENSIONS (/CHAIN/)

DATUM DIMENSIONS (/DATUM/)

The four dimension classes are found under FKey DIM submenu /HORZ/ or submenu /VERT/. The primary dimensioning class is the default and is the type of dimensioning used in this chapter up to this point. The other three classes (BASE, CHAIN, and DATUM) provide additional functionality in adding multiple dimensions and are available only for horizontal and vertical dimensions. The four classes are summarized on the following pages:

PRIMARY DIMENSIONING CLASS:

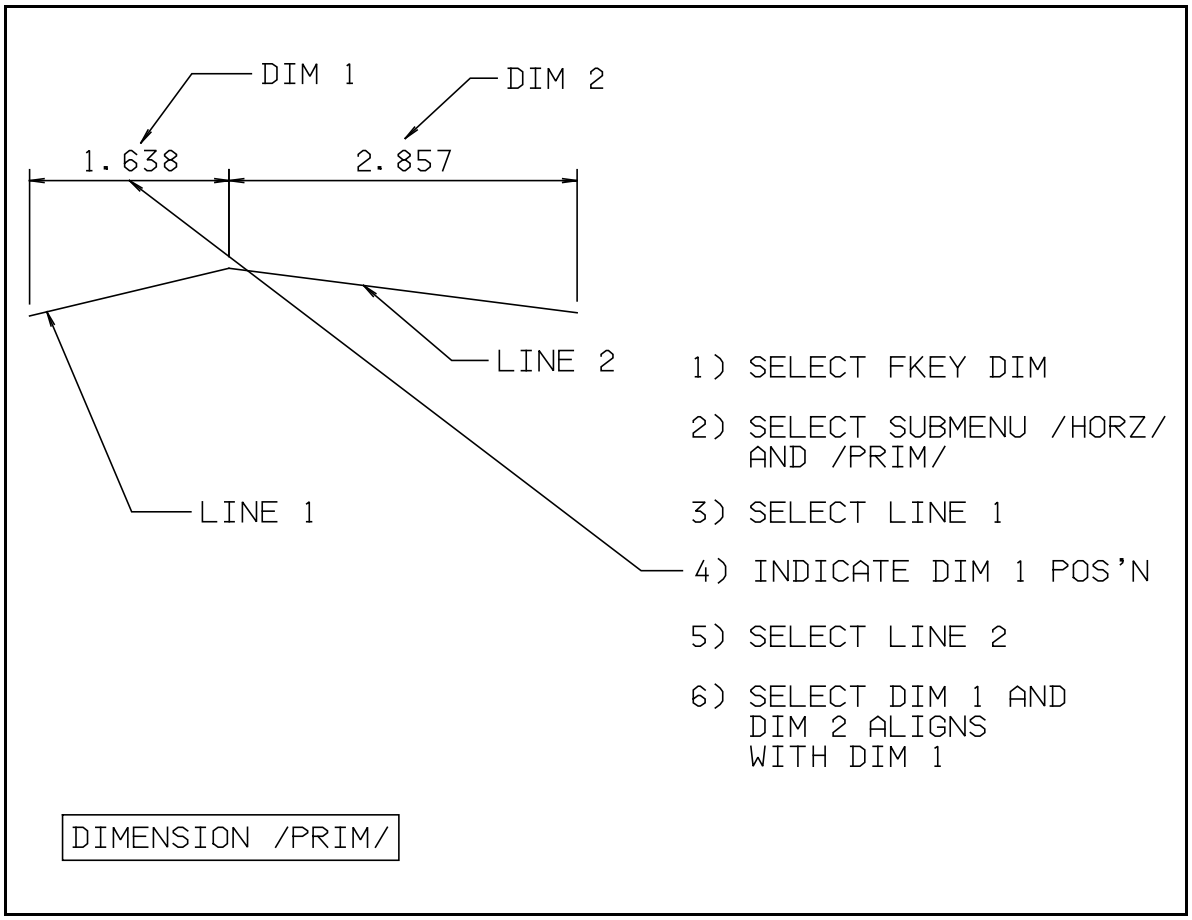

Figure 19 An example of the primary dimensioning class.

BASE DIMENSIONING CLASS:

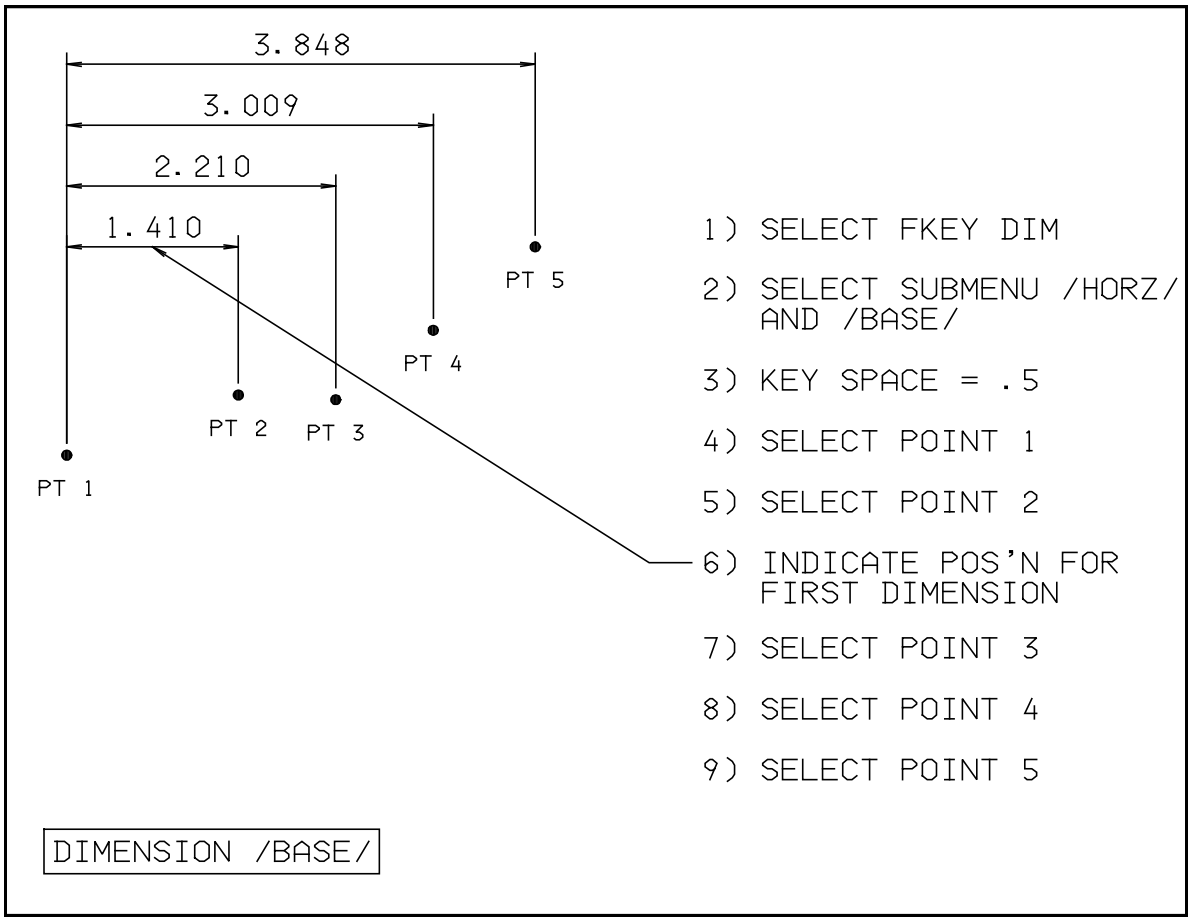

Figure 20 An example of the base dimensioning class

Note that you have the option to key the spacing between the dimensions.

CHAIN DIMENSIONING CLASS:

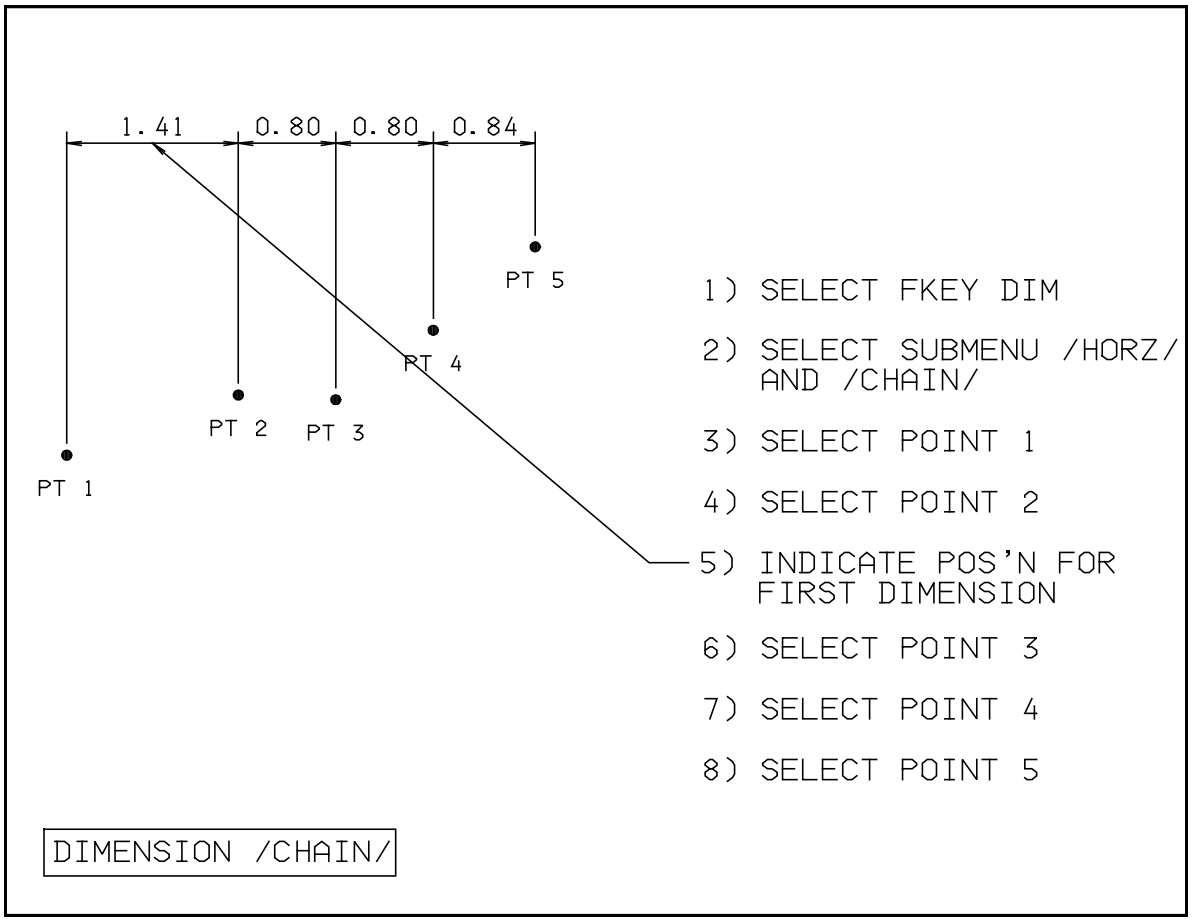

Figure 21 An example of the chain dimensioning class.

DATUM DIMENSIONING CLASS:

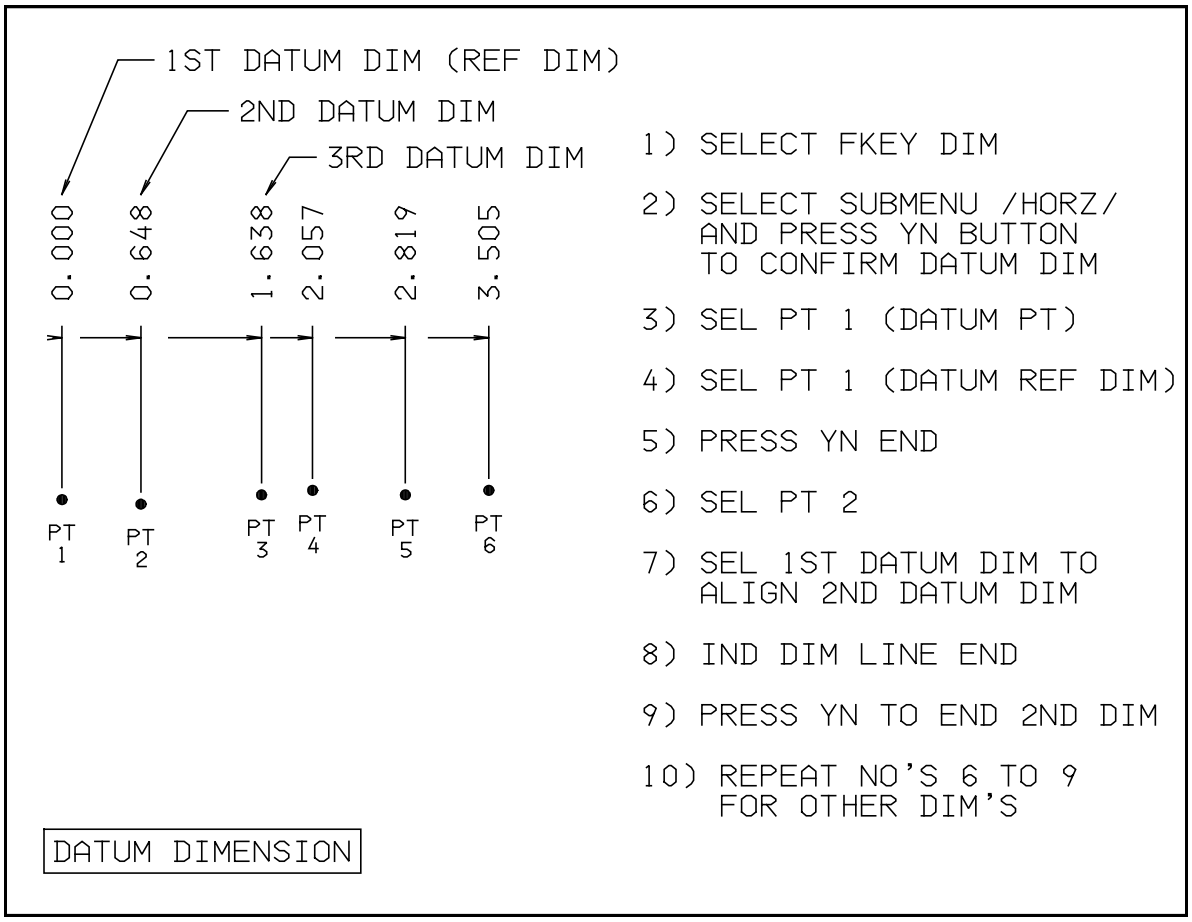

Figure 22 An example of the datum dimensioning class

Note that ISO datum dimensions can start from any selected point.

STANDARD datum dimensions must start from the origin. To move the origin to the point where you want to start datum dimensioning, create an alternate co-ordinate system at the required point (See FKey ORIGIN submenu /START/).

CHAPTER 24

FKey SYMBOL

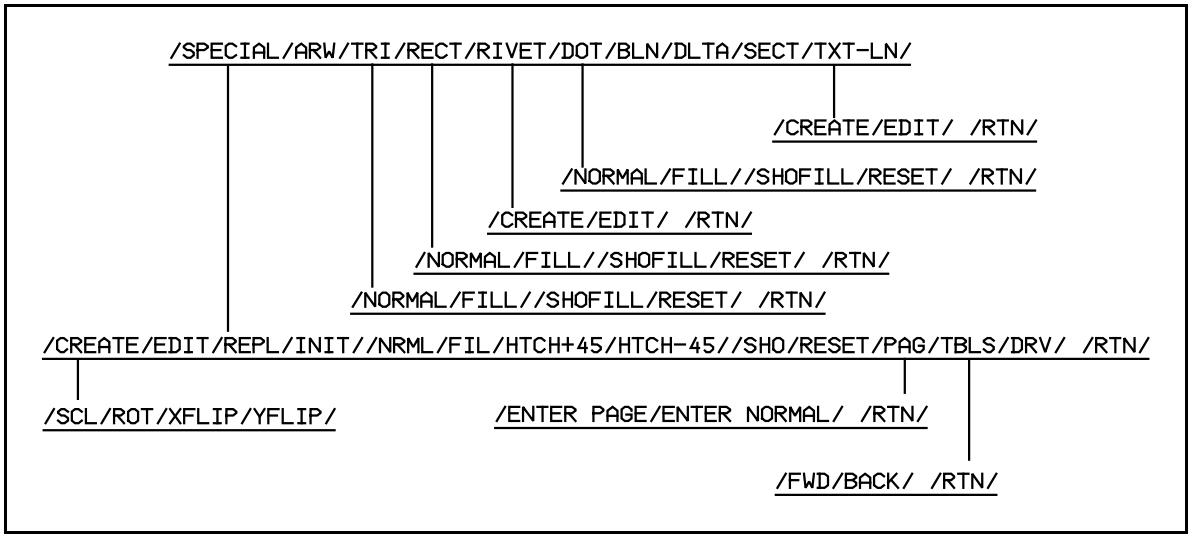

Figure 1 - Menu Item Tree for FKey SYMBOL

Fkey SYMBOL provides a quick and easy way of placing new symbols onto your drawing and editing existing symbols.

A symbol is a Micro CADAM image that has its geometry defined somewhere other than in the existing drawing.

Micro CADAM has available two types of symbols. They are:

- Standard Symbols
- Special Symbols

Standard symbols are part of the program code and are always present. Examples of standard symbols are: arrow, triangle, rectangle, rivet, dot, balloon, delta, section arrow and text line. Examples of standard symbols are shown in Figure 2 on page 24-2.

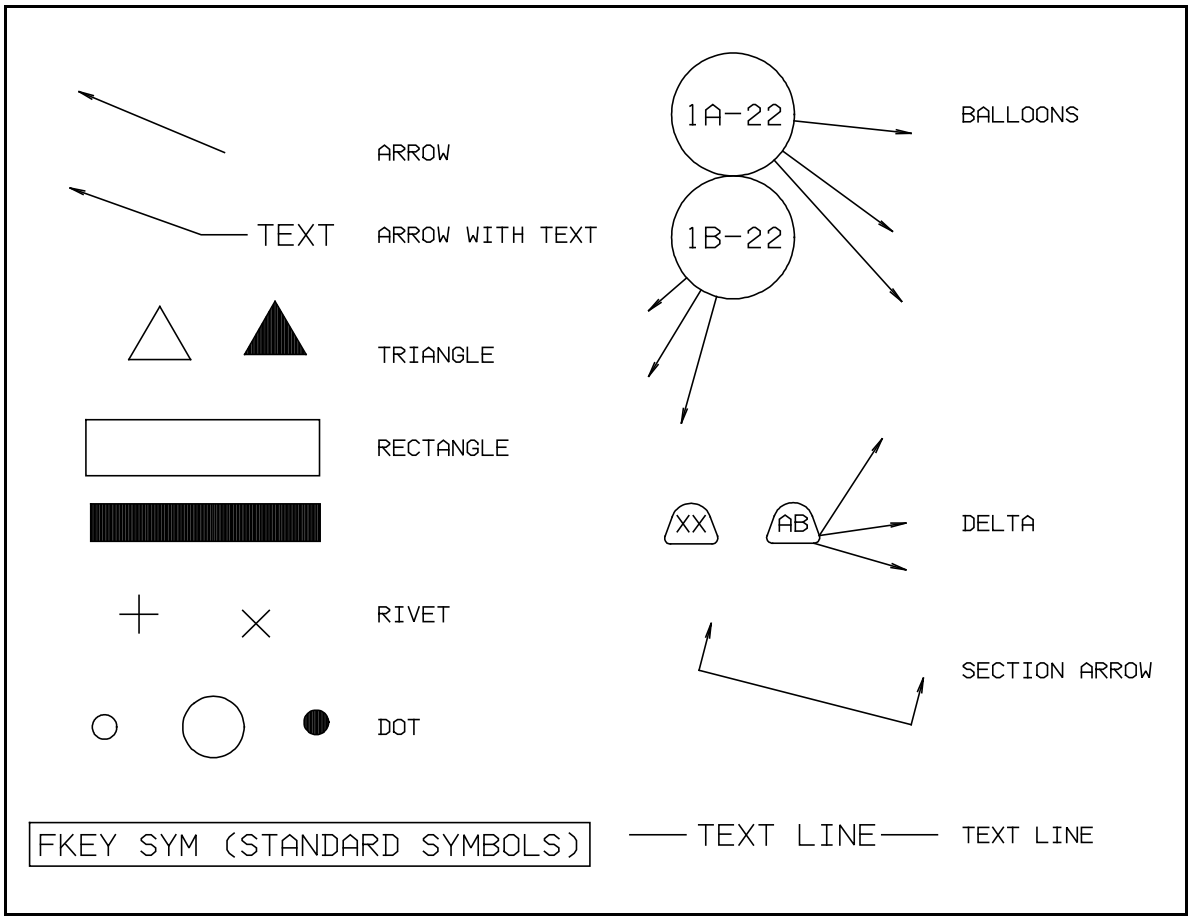

Figure 2 Examples of standard symbols

Special symbols are composed of geometry created by the cad operator and stored in a special place (group SYS and user SYMBOL). When used in a drawing, special symbols are referenced by pointers showing their symbol table and symbol number.

Examples of special symbols are shown in Figure 3 on page 24-3.

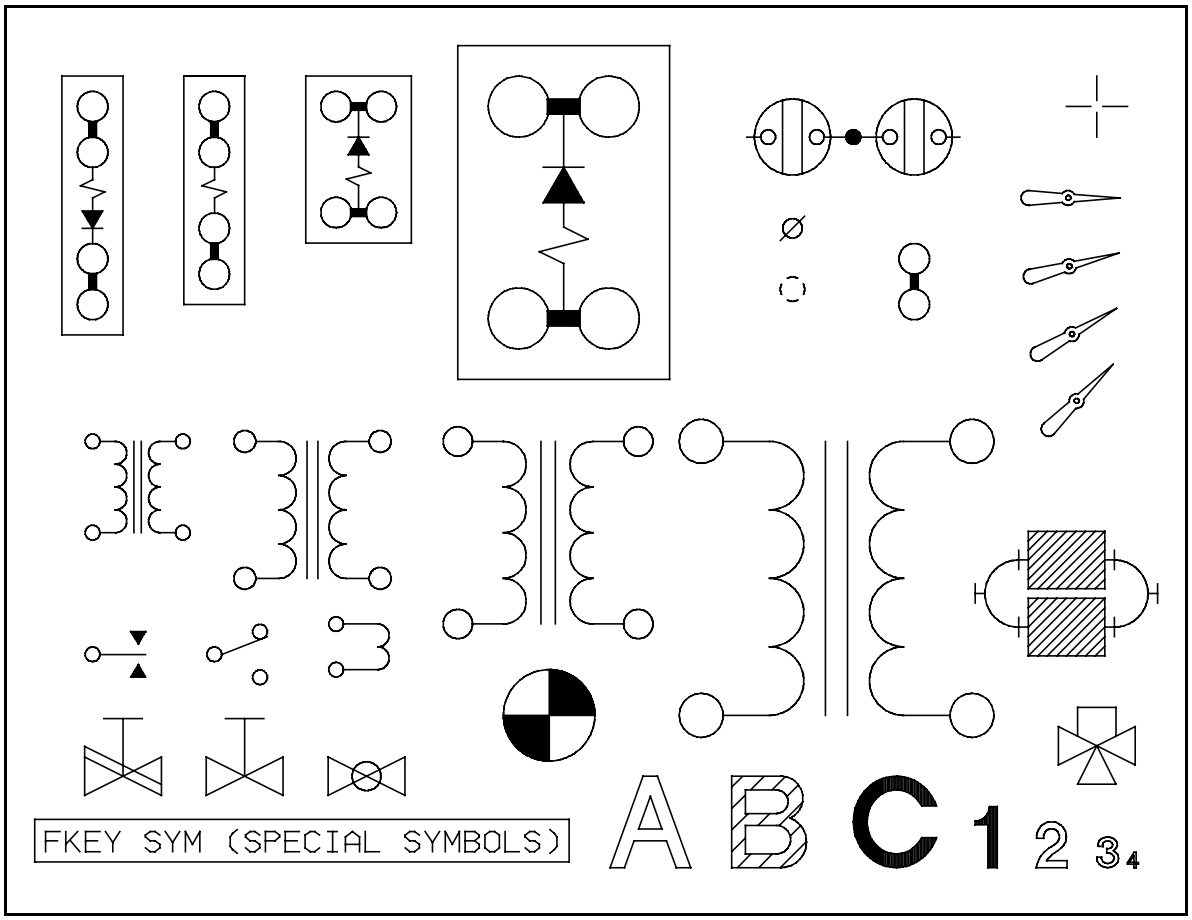

Figure 3 Examples of special symbols

MENU ITEM TREE DESCRIPTION:

- /SPECIAL/ Accesses special symbols defined in your own symbol table
  - /CREATE/ Creates a special symbol at a specific location
    - /SCL/ Allows you to change the scale of the special symbol that was just created
    - /ROT/ Allows you to rotate the special symbol that was just created
    - /XFLIP/ Allows you to flip the special symbol that was just created about its X axis

- /YFLIP/ Allows you to flip the special symbol that was just created about its Y axis

- /EDIT/ Edits an existing special symbol. You may change its scale, rotation angle, flip it about its X or Y axis, and change the fill pattern of an existing special symbol.

- /INIT/ Initializes the symbols in the drawing. This option reloads the symbols from the symbol table onto the symbol pointers in the drawing. This is necessary if a symbol definition should change, or if symbols have been brought down from mainframe or professional cadam.

- //NRML/ Places an unfilled special symbol

- //FIL/ Places a filled special symbol

- /HTCH+45/ Crosshatches a symbol at a 45 degree angle

- /HTCH-45/ Crosshatches a symbol at a -45 (i.e. 135) degree angle

- /SHOW/ Displays only the symbols of the defined fill pattern

- /RESET/ Restores the entire display after /SHOW/ has been selected

- /PAGE/ Displays a specific symbol table. You may select a symbol from this display screen to place it into your drawing.

  - /ENTER PAGE/ Makes the system go directly to the current symbol table upon selecting primary menu option /SPECIAL/

  - /ENTER NORMAL/ Returns to the normal symbol menu-message structure

- /TBLS/ Displays a list of available symbol tables. Select the table you want and that table will become the active special symbol table (Select /FWD/ or /BACK/ if necessary to flip through the pages)

- /DRIVE/ Changes the drive where the special symbols are found.

- /RTN/ Returns to the previous menu level

- /ARW/ Creates an arrow at a defined point, or uses a line, circle or ellipse as a starting point. Also allows you to place text at the end of the arrow.

- /TRI/ Creates an equilateral triangle, or changes an existing triangle

  - /NORMAL/ Creates an unfilled triangle

  - /FILL/ Creates an filled triangle

  - /SHOFILL/ Displays all filled triangles (and all other filled symbols and dittos)

  - /RESET/ Restores the entire display after /SHOFILL/ has been selected

  - /RTN/ Returns to the previous menu level

- /RECT/ Creates a new rectangle by defining the two corner points, or by defining the height and width. Also modifies an existing rectangle by redefining an existing corner point, or defining a new height and width.

  - /NORMAL/ Creates an unfilled rectangle

  - /FILL/ Creates a filled rectangle

  - /SHOFILL/ Displays filled rectangles and all other filled symbols or dittos

  - /RESET/ Redisplays the entire drawing after /SHOFILL/ has been selected

  - /RTN/ Returns to the previous menu level

- /RIVET/ Creates or modifies a rivet

  - /CREATE/ Creates a rivet

  - /EDIT/ Modifies an existing rivet

  - /RTN/ Returns to the previous menu level

- /DOT/ Creates or edits a dot

  - /NORMAL/ Creates an unfilled dot

- /FILL/ Creates a filled dot
- /SHOFILL/ Displays filled dots and all other filled symbols and dittos
- /RESET/ Redisplays the entire screen after /SHOFILL/ has been selected
- /RTN/ Returns to the previous menu level

- /BLN/ Creates a balloon by defining a centerpoint, or by defining a centerpoint and radius in one step.
  Creates a balloon using a line, arrow, or another balloon to define its location.
- /DLTA/ Creates a delta
- /SECT/ Creates a section line arrow
- /TEXT-LN/ Creates or modifies a textline
  - /CREATE/ Creates a point-to-point textline
    Creates a specified length vertical or angled textline
    Creates a horizontal, vertical or angled textline between a point and a line
  - /EDIT/ Edits an existing textline
  - /RTN/ Returns to the previous menu level

FKey SYMBOL

BEGINNER SECTION

STANDARD SYMBOLS

FKey SYMBOL

SUBMENU / ARW /

FKey SYMBOL SubMenu /ARW/ allows you to create arrows the following ways:

1) Create an arrow at a defined point
2) Create an arrow using a line as a starting point
3) Create an arrow using a circle as a starting point
4) Create an arrow using an ellipse as a starting point

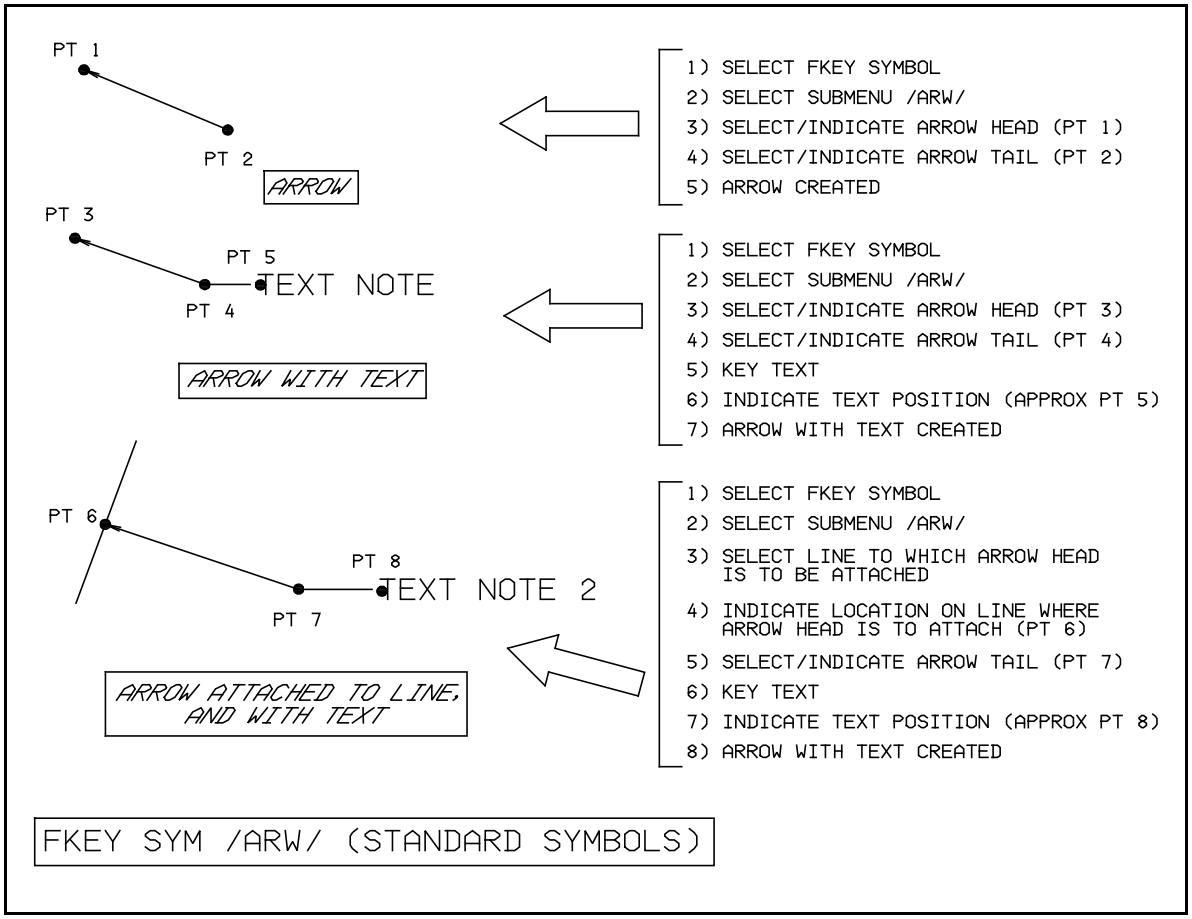

Figure 4 Examples of different arrow constructions

In addition, text may be attached to an arrow as it is created. Different types of arrow construction are shown in Figure 4 above. Note that the example with the arrow head attached to the line would work exactly the same if a circle or ellipse was selected instead of the line.

FKey SYMBOL

SUBMENU / TRI /

FKey SYMBOL SubMenu /TRI/ allows you to create and edit equilateral triangles the following ways: (Note that the triangles can be filled or unfilled.)

1) Create a triangle starting at a defined point with a keyed rotation angle.
2) Create a triangle starting at a defined point and selecting a second point to define the rotation angle.
3) Create a triangle starting at a defined point and selecting a line to define the rotation angle.
4) Create a triangle starting at a defined point and selecting a circle or spline to define the rotation angle.

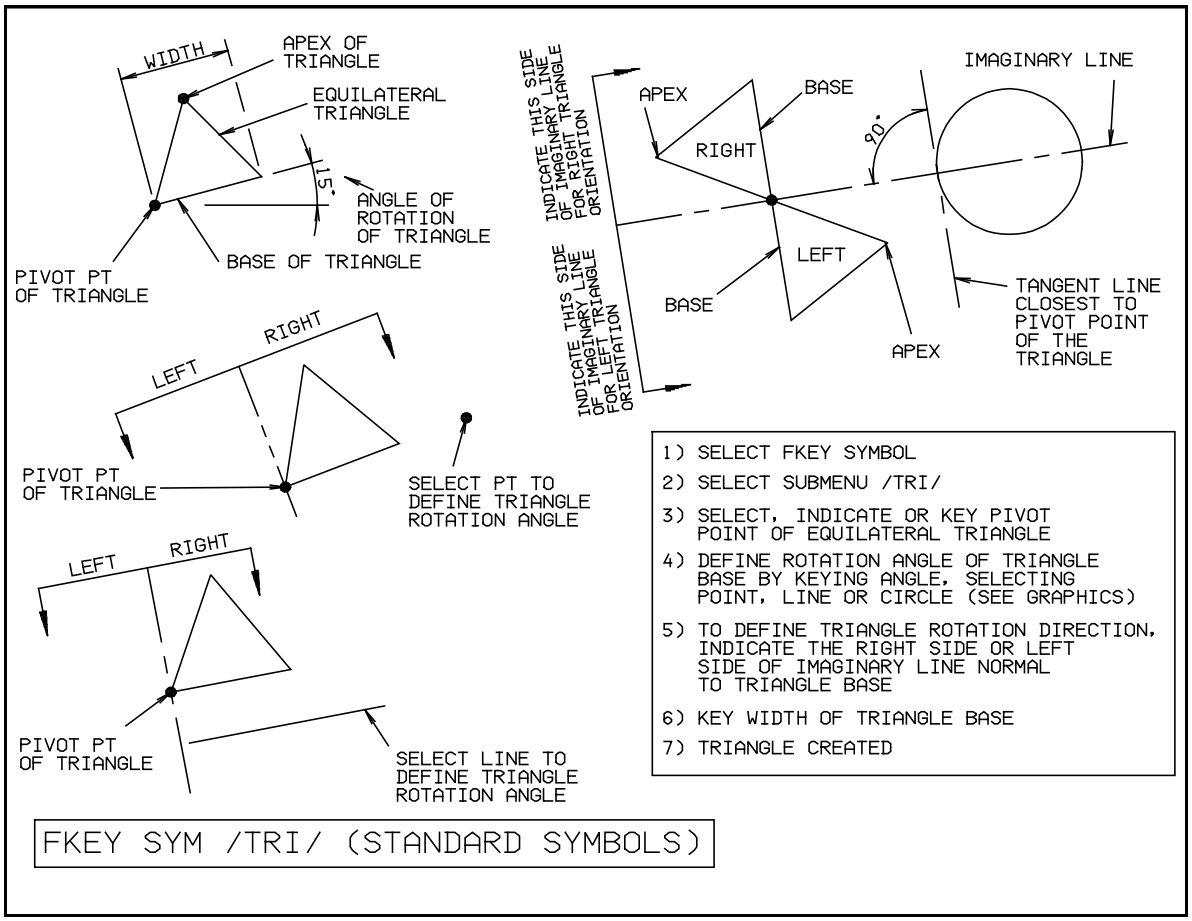

Figure 5 Examples of different triangle constructions

Different types of triangle construction are shown in Figure 5 above. Note that the once the angle of rotation of the triangle has been defined, the apex of the triangle can be pointed up or down, depending on which side of the imaginary line you indicate direction. This imaginary line goes through the pivot point of the triangle and is normal (i.e. at 90°) to the triangle base.

FKey SYMBOL

SUBMENU / RECT /

FKey SYMBOL SubMenu /RECT/ allows you to create and edit rectangles the following ways: (Note that the rectangles can be filled or unfilled.)

1) Create a rectangle by defining two diagonally opposite corner points.
2) Create a rectangle by defining one corner point and keying in the width and height. The resulting rectangle may appear in any one of four different quadrants.
3) Create a rectangle around a note by selecting the first character in the note.

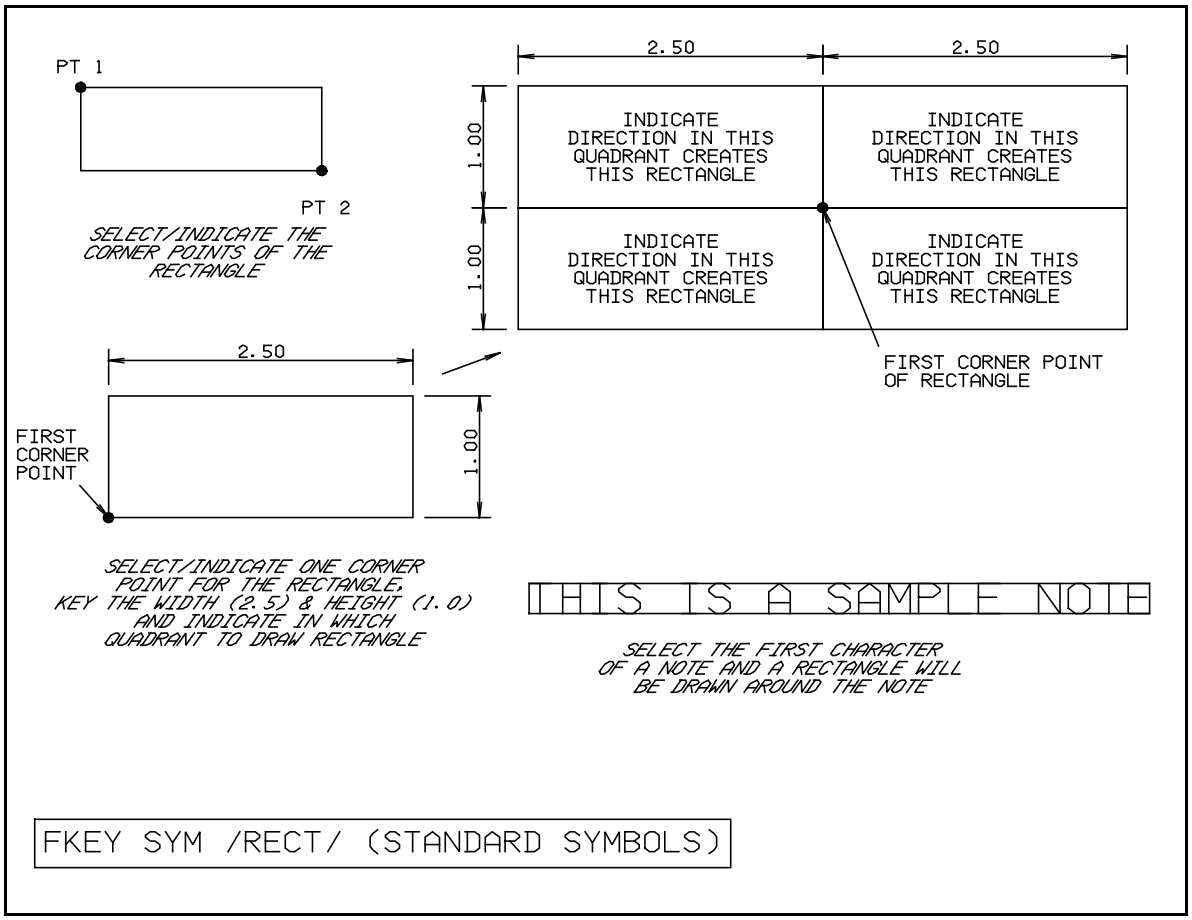

Figure 6 Examples of different rectangle constructions

Different types of rectangle construction are shown in Figure 6 above.

FKey SYMBOL

SUBMENU / RIVET /

FKey SYMBOL SubMenu /RIVET/ allows you to create and edit rivets the following ways:

1) Create a rivet by defining the pivot point of the rivet, and keying its rotation angle.
2) Create a rivet by defining the pivot point of the rivet, and selecting another point to define the rotation angle.
3) Create a rivet by defining the pivot point of the rivet, and selecting a line to define the rotation angle.
4) Create a rivet by defining the pivot point of the river, and selecting a circle or spline to define the rotation angle. The rotation angle of the base is the same angle as the tangent line to the circle (or spline) at the closest to the pivot point of the rivet.

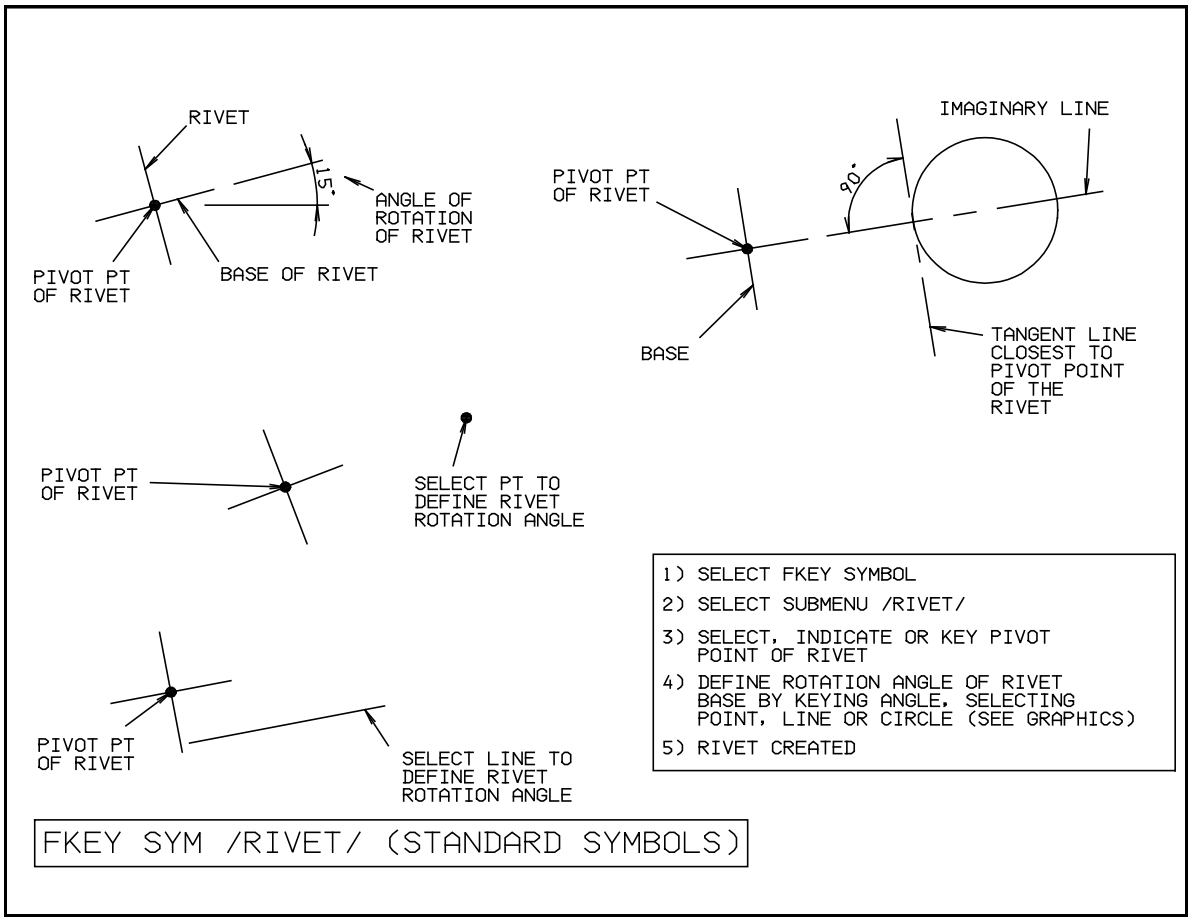

Figure 7 Examples of different rivet constructions

Different types of rivet construction are shown in Figure 7 above.

FKey SYMBOL

SUBMENU / DOT /

FKey SYMBOL SubMenu /DOT/ allows you to create and edit dots the following ways: (Note that the dots can be filled or unfilled.)

1) Create a dot by defining its center point and keying its radius.

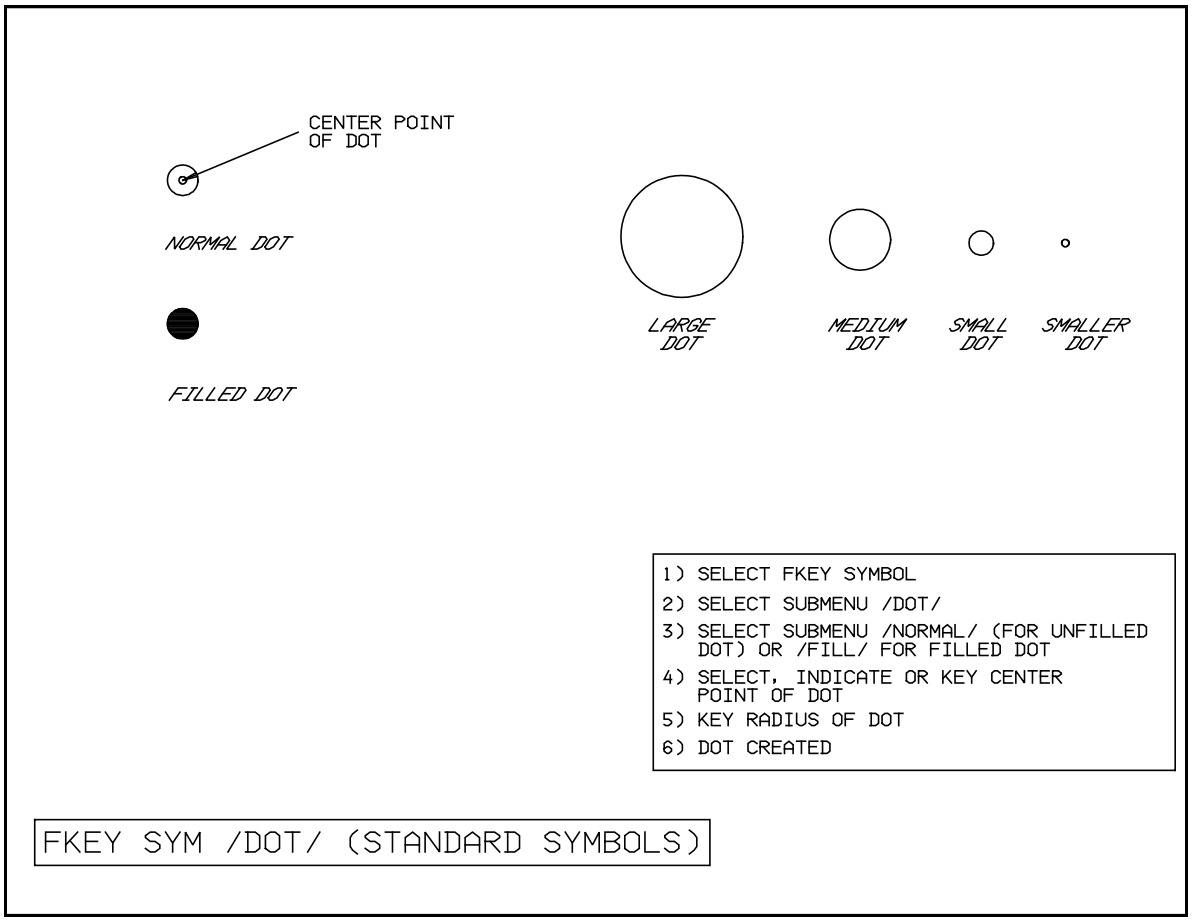

Figure 8 Examples of different dot constructions

Different types of dot construction are shown in Figure 8 above.

FKey SYMBOL

SUBMENU / BLN /

FKey SYMBOL SubMenu /BLN/ allows you to create and edit balloons the following ways:

1) Create a balloon by defining the pivot point of the balloon and its radius, and keying in text.
2) Create a balloon by referencing an existing balloon, indicating the direction of the new balloon, selecting an existing element, indicating where the arrow will be attached, and then keying in text.

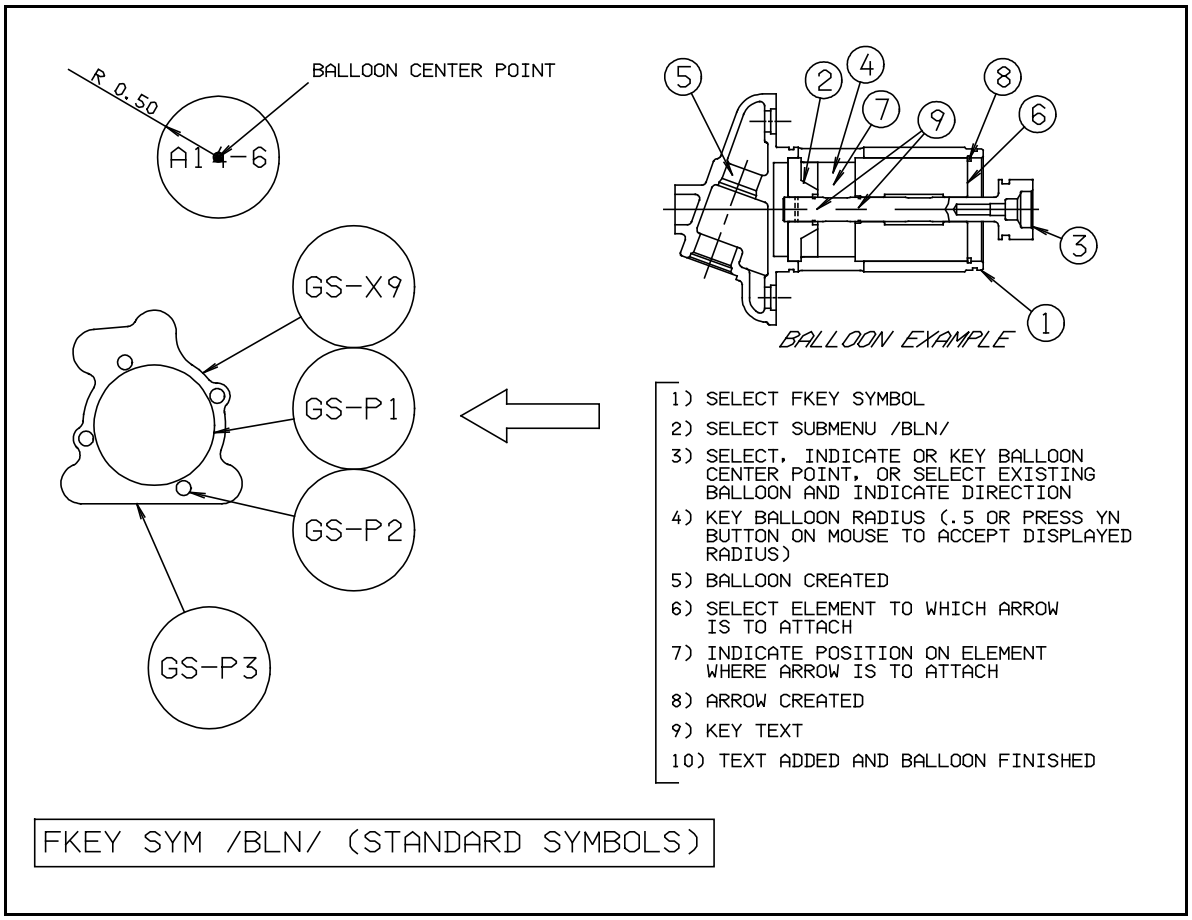

Figure 9 Examples of different balloon constructions

Different types of balloon construction are shown in Figure 9 above.

FKey SYMBOL

SUBMENU / DELTA /

FKey SYMBOL SubMenu /DELTA/ allows you to create and edit deltas the following ways:

1) Create a delta by defining the pivot point of the delta and keying in text (maximum 2 characters).
2) Create a delta by defining the pivot point of the delta, selecting an existing element, indicating where the arrow will be attached, and then keying in the text (maximum 2 characters).

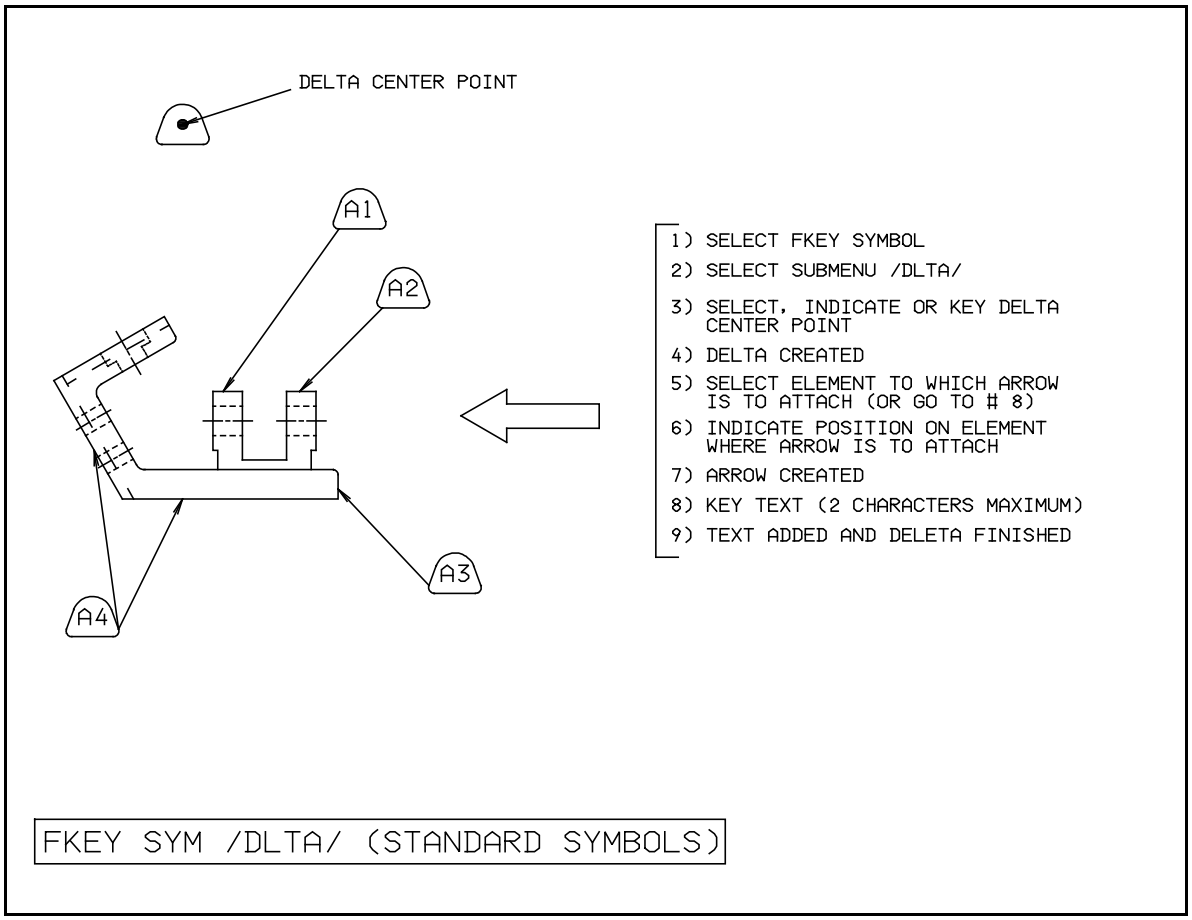

Figure 10 Examples of different delta constructions

Different types of delta construction are shown in Figure 10 above.

FKey SYMBOL

SUBMENU / SECT /

FKey SYMBOL SubMenu /SECT/ allows you to create section lines the following way:

1) Create a section by selecting an existing line, indicating the location where the end of the line will be relimited to, then indicating on which side of the line the section arrow will appear. The same procedure applies to the other end of the section line.

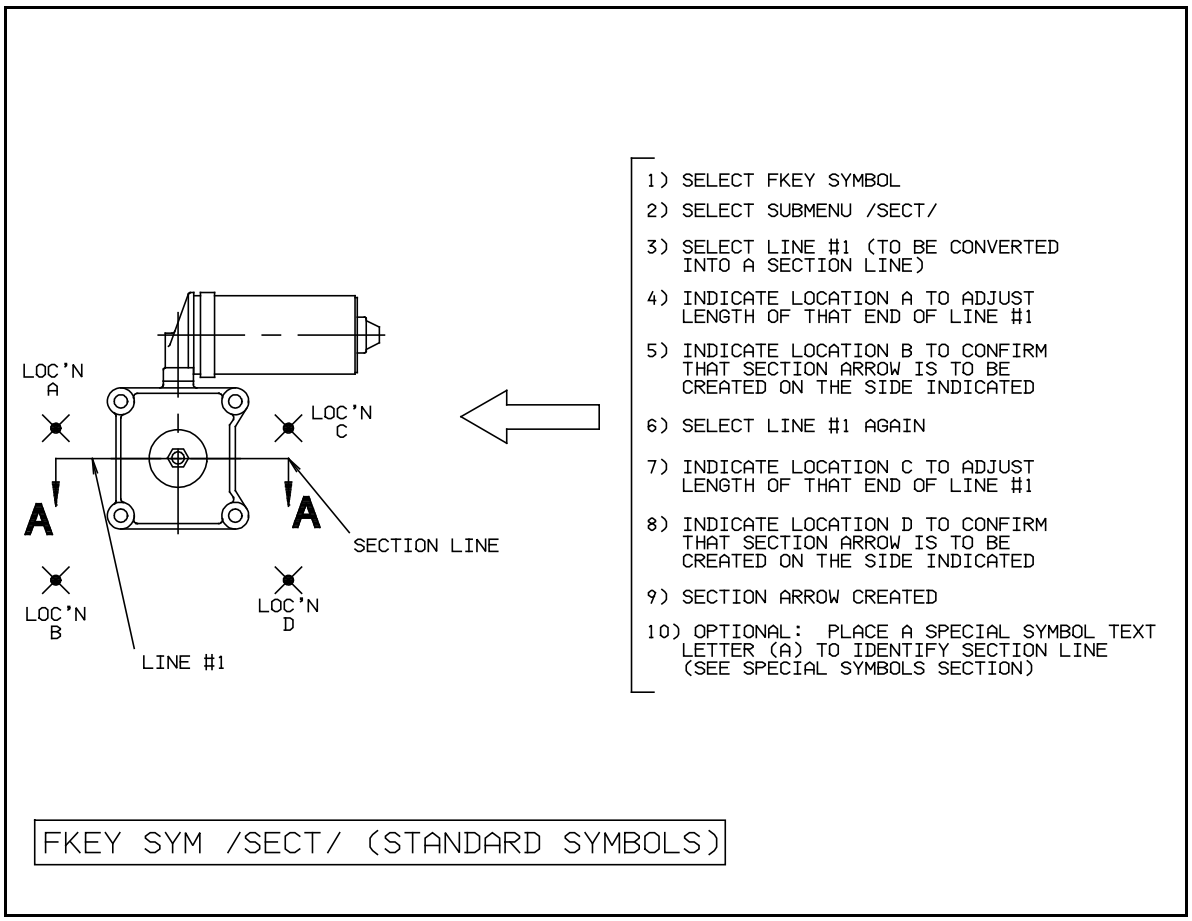

Figure 11 Examples of section line construction

An example of section line construction is shown in Figure 11 above.

FKey SYMBOL

SUBMENU / TXT-LN /

FKey SYMBOL SubMenu /TXT-LN/ allows you to create and edit text lines the following ways:

1) Create a text line between two points.
2) Create a horizontal text line.
3) Create a vertical text line.
4) Create a text line at any angle.

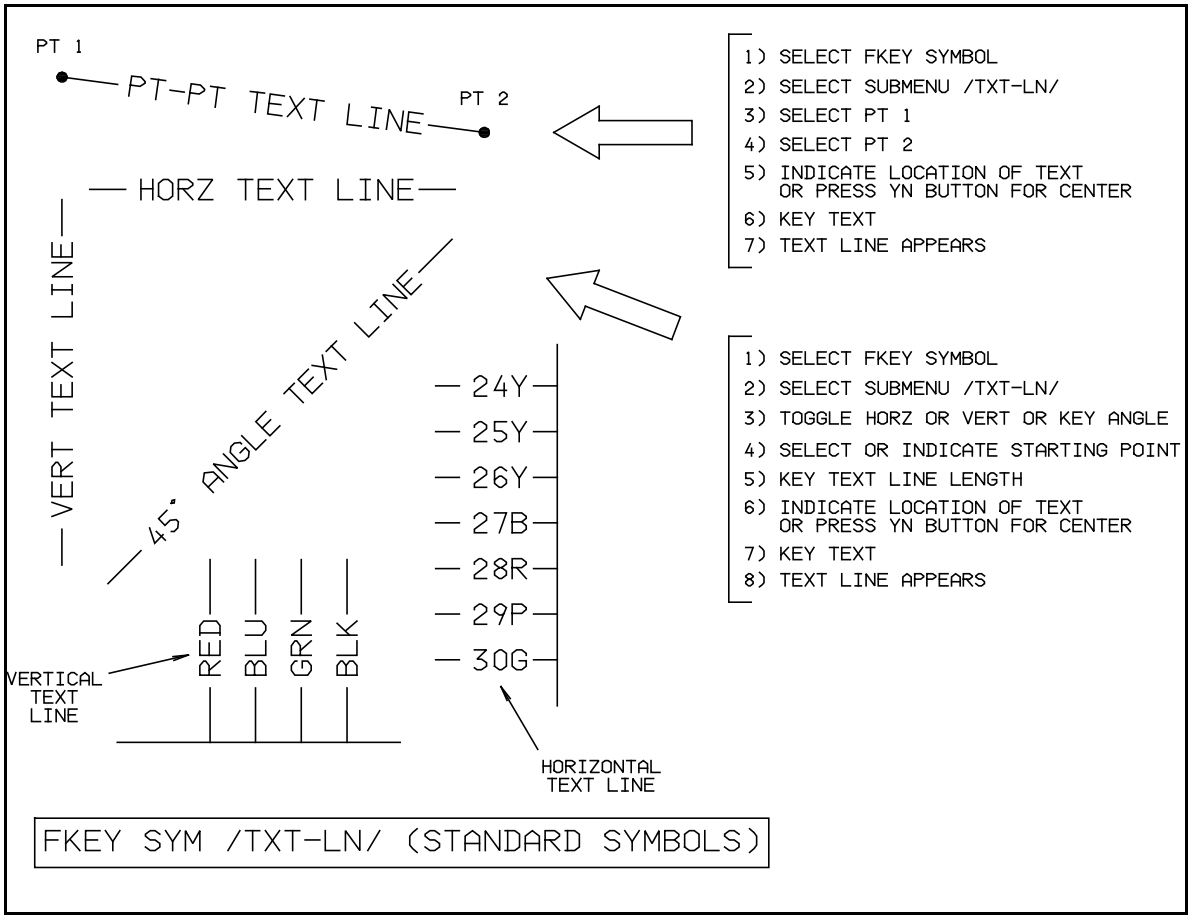

Figure 12 Examples of different text line constructions

Different types of text line construction are shown in Figure 12 above.

FKey SYMBOL

ADVANCED SECTION

SPECIAL SYMBOLS

FKey SYMBOL

SUBMENU / SPECIAL /

INTRODUCTION:

In general you may create a group with any 4 character name you want, and a user with any 6 character name you want. However, MICRO CADAM has a ***user*** name that is a reserved name, and a ***group,user*** name that is a reserved group,user name.

The user name ***STDLIB*** is a reserved user name. User *STDLIB* is the place where standard library drawings are kept. Please see FKey DETAIL in Chapter 26 for more information on standard library.

The group,user combination ***SYS,SYMBOL*** is a reserved group and user name. Group *SYS* and user *SYMBOL* is the place where special symbols are kept.

ACCESSING THE SYMBOL TABLE DISPLAY PAGE AND MAKING A SYMBOL TABLE ACTIVE:

To access special symbols, press FKey SYMBOL and select SubMenu /SPEC/. The submenu at the bottom of the display screen will change to read *//CREATE/EDIT/REPL/INIT//NRML/FIL/HTCH+45/HTCH-45//SHO/RESET/PAG/TBLS/DRV/ /RTN*. At this point select the submenu item /TBLS/ and the display page shown in Figure 13 on page 24-31 will appear. This page presents you with a list of all available symbol tables, including a text description on the right side.

(NOTE: If the message ***Table not found*** appears on the right side near the top of the screen either the symbol tables have not been copied onto the hard disk, or you have to select the /DRV/ submenu option and change to the drive where the symbol tables reside)

If necessary select the submenu items /FWD/BACK/ to flip forward or backwards through the symbol pages to see all available symbol tables.

To make a symbol table active, select it from the symbol table list. Let's select ***SYMTB005 PIPING SYMBOLS (INCH)*** from the symbol table to make it active (i.e. position the green cursor on top of the word SYMTB005 and press the SELECT button on the mouse).

```
SYMBOL          View  PV  Scale   0.02 Wdo  4.7395,  0.0  (C)1993 ALTIUM  1.3C
                          Sel filename / Key page #
Id=GARAGE ADDITION                                  Drv:C Grp:SYS  Usr:SYMBOL

                                                          PAGE 1
   SYMTB000        1     SAMPLE SYMBOLS
   SYMTB001        1     MECHANICAL SYMBOL (MM) (#1-10)
   SYMTB001        11    MECHANICAL SYMBOL (MM) (#11-20)
   SYMTB002              PIPING SYMBOLS (MM)
   SYMTB004        1     MECHANICAL SYMBOL (INCH) (#1-10)
   SYMTB004        11    MECHANICAL SYMBOL (INCH) (#11-12)
   SYMTB005              PIPING SYMBOLS (INCH)
   SYMTB128        1     FONT SYMBOL TABLE: HELVETICA MED.
   SYMTB128        127   FONT SYMBOL TABLE: HELVETICA MED.

/FWD/BACK/                                                              /RTN/
```

Figure 13 Symbol table display screen.

ACCESSING THE SYMBOL DISPLAY PAGE FOR THE ACTIVE SYMBOL TABLE:

After making the symbol table active, you will be returned to your display screen. To call up a display page of available symbols within SYMTB005 select submenu /PAG/. The display page shown in Figure 14 on page 24-32 will appear. To make a symbol active, select it from the display page of available symbols. You will now be returned to your drawing screen.

(NOTE: After selecting the submenu item /PAG/ the submenu will change as the symbol display screen appears. The submenu items /ENTER PAGE/ and /ENTER NORMAL/ will appear. /ENTER PAGE/ is an optional setting that immediately places you in this display screen after you select /SPECIAL/ on the main submenu screen. It is a shortcut to immediately present you with a symbol display screen after selecting the /SPECIAL/ submenu. Select /ENTER NORMAL/ to revert to the normal way of entering the symbol display page.)

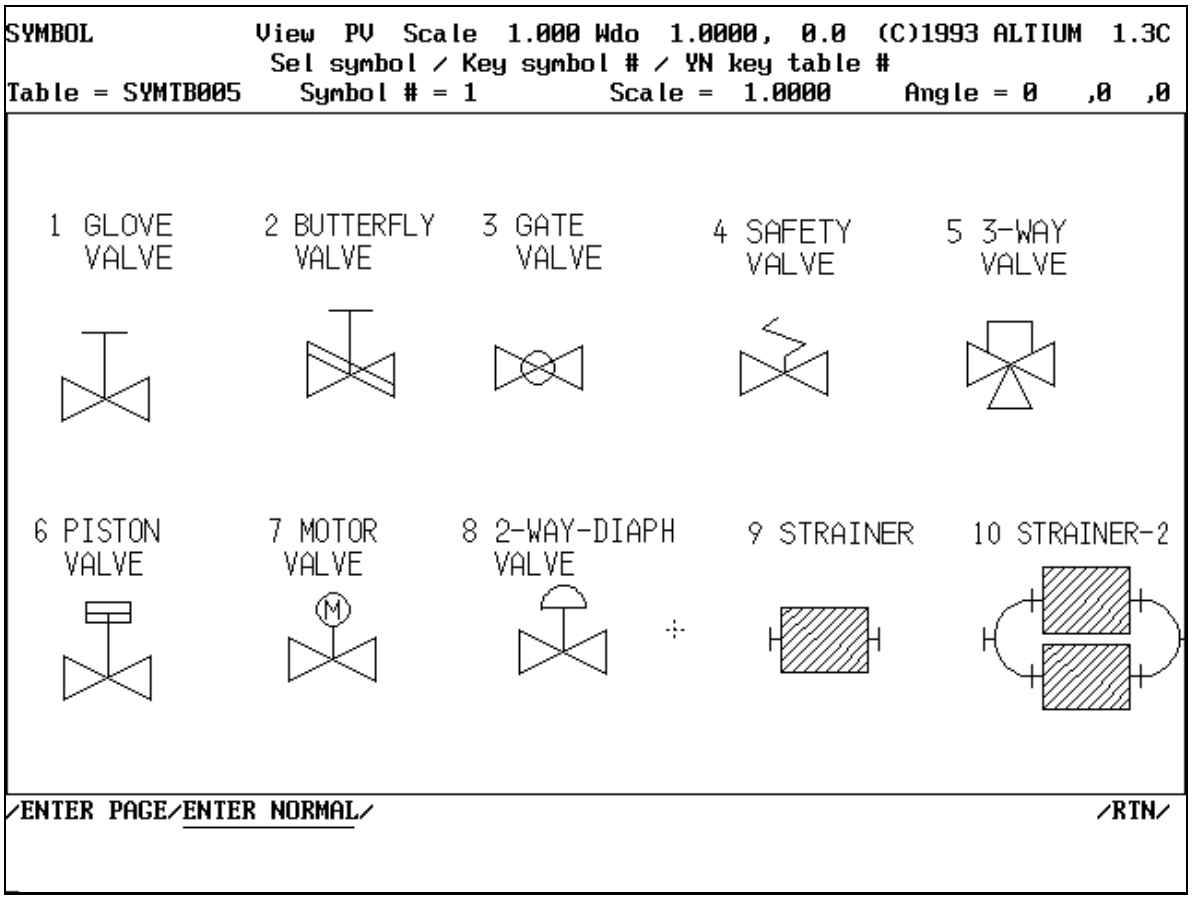

Figure 14 Symbol display page screen for SYMTB005 symbol table

PLACING A SYMBOL ON YOUR DRAWING:

To place the active symbol on your drawing screen SELECT a point or INDICATE a position and the symbol will appear.

You may now modify the symbol just created as follows:

- **/SCL/** You may scale the symbol by selecting the /SCL/ submenu option and keying in the absolute scale for the symbol. For example, a scale of 2 will make the symbol twice as large, and a scale of .5 will make the symbol half as large. The symbol scales around its definition point.

- **/ROT/** You may rotate the symbol to any angle by selecting the /ROT/ submenu option and keying in the absolute angle of rotation. The symbol rotates around its definition point.

- **/XFLIP/ and /YFLIP/** You may flip the symbol around its X axis or Y axis by selecting the submenu items /XFLIP/ and /YFLIP/. Each time you select the submenu item the symbol will flip to the opposite side of the axis. The X axis and Y axis refer to the normal orientation of the symbol definition point.

The /SCL/, /ROT/ and /XFLIP/ /YFLIP/ options are shown in Figure 15 on page 24-34.

Prior to placing the symbol on your drawing you also have the option to choose the type of fill that the symbol will have. The following submenu options adjust the type of fill the symbol will have:

- **/NRML/** The symbol will not have a fill.

- **/FIL/** The symbol will have a solid fill.

- **/HTCH+45/** The symbol will be filled with X hatching running at a 45 degree angle.

- **/HTCH-45/** The symbol will be filled with X hatching running at a -45 degree angle.

The /NRML/, /FIL/, /HTCH+45/ and /HTCH-45/ options are shown in Figure 15 on page 24-34.

HOW SYMBOLS FIT INSIDE A MICRO CADAM DRAWING:

When a Micro CADAM symbol is first placed onto a drawing, a copy of the symbol geometry is placed inside the current drawing. This symbol geometry is not available for us to see or edit. Think of it as a detail page that cannot be viewed or accessed. This hidden 'detail' page is used to display the symbol image on the front page of the drawing similar to the way a regular detail page can be used to display a ditto.

The first time the symbol is used in a drawing the geometry is copied from the symbol table in SYS,SYMBOL and inserted into the hidden detail page in the drawing. Should the geometry in the symbol table be subsequently changed, this change will not be reflected in the hidden detail page until the submenu item /INIT/ is selected. /INIT/ scans the entire drawing for symbols and interrogates any symbols it finds for their symbol table number and symbol number (in the table). It then goes to SYS,SYMBOL and recopies all of the symbol geometry in the symbol tables into the hidden detail pages in the current drawing. In this way, all of the symbols in a drawing are refreshed.

Because symbols can be refreshed on a drawing it is never a good idea to change an existing

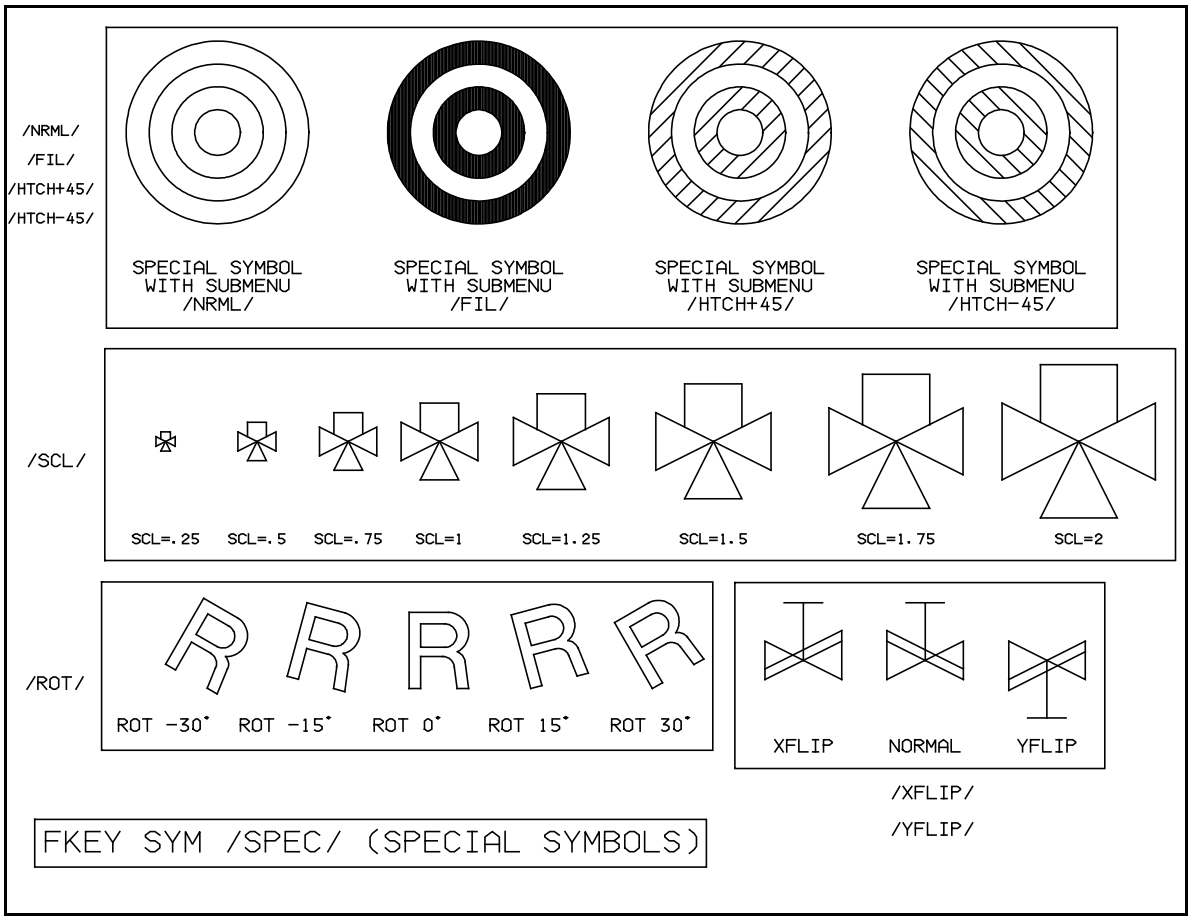

Figure 15 Examples of symbol fill options, and /SCL/, /ROT/ and /XFLIP/ & /YFLIP/ options

symbol without fully considering how the changes will affect a drawing should /INIT/ be used. Generally once a symbol table is put into production, it is never removed or changed.

SYMBOLS IN MAINFRAME CADAM:

When mainframe CADAM users access a special symbol and place it into their drawing, they are really only inserting a pointer into the drawing. This pointer references the symbol table and symbol number in that table. Each time the drawing is called up onto the display screen, mainframe CADAM scans the drawing for symbol pointers, then calls any symbols from the symbol table and displays them on the drawing. Thus mainframe symbols are not a part of the drawing.

When mainframe CADAM drawings are transferred to MICRO CADAM using the Data Transfer

utility, these symbol pointers are transferred with the drawing. FKey SYMBOL SubMenu /INIT/ must be selected to refresh the symbol pointers with the current symbol geometry. Thus to ensure that symbols are mapped correctly between mainframe and MICRO CADAM, the symbol tables must be identical on both systems. For example symbol No. 23 in symbol table 119 must be exactly the same in mainframe CADAM and MICRO CADAM. When MICRO CADAM drawings are transferred to mainframe CADAM, the symbol pointers are transferred with the drawing and the symbol refresh occurs automatically when the drawing is first called onto the screen.

SHOWING SYMBOLS AND REDISPLAYING A DRAWING:

Sometimes when working on a drawing you are not sure if items displayed are symbols, or dittos, or geometry. One way to find out is to use FKey ANALYZE and check to see what type of element is analyzed. Another way is to select FKey SYMBOL /SPECIAL/ /SHO/. All of the symbols will be displayed. Select SYMBOL /SPECIAL/ /RESET/ to redisplay the entire drawing.

EDITING AN EXISTING SYMBOL ON A DRAWING:

To edit an existing symbol on a drawing SELECT FKey SYMBOL and submenu /SPECIAL/ /EDIT/. The menu prompt ***Sel symbol to edit*** will appear near the top of the display screen. Select the symbol you want to edit. The symbol will highlight, /SCL/ will be underlined by default, and the menu prompt ***Key scale = 1.25*** (the number will vary) will appear near the top of the screen. In addition, the information line ***Table = Symtb005 Symbol # =5 Scale = 1.25 Angle = 0, 0, 0*** with all the attributes of the selected symbol will appear near the top of the screen. Key a new scale and the selected symbol will change to that scale.

If you select submenu /ROT/ the menu prompt ***Sel element / Key angle = 15.000*** will appear near the top of the screen. Select an element to define the new rotation angle, or key the new rotation angle. The selected symbol will rotate to the new angle.

If you select submenu /XFLIP/ or /YFLIP/ the selected symbol will xflip or yflip.

You may also select any of the fill conditions /NRML/FIL/HTCH+45/HTCH-45/ and the selected symbol will change to that fill condition.

REPLACING AN EXISTING SYMBOL ON A DRAWING WITH ANOTHER SYMBOL:

To replace an existing symbol on a drawing with another symbol, select FKey SYMBOL SubMenu /SPECIAL/ /REPL/. The menu prompt ***Sel replacement symbol / Key symbol #*** will appear near the top of the screen.

Select a replacement symbol already on the screen (i.e. an existing symbol) or key the number of the symbol you want to use for the replacement symbol. (NOTE: It is sometimes required to access the symbol tables and place onto the drawing a copy of the symbol you want to use as the replacement symbol prior to starting the replacement procedure.)

The menu prompt will change to read ***Sel symbol to replace***. Select the symbol you want replaced and the selected symbol will be replaced with the replacement symbol.

Note that this replacement option is fast and easy way to replace a normally open contact with a normally closed contact, etc.

USING FKEY RELIMIT /BREAK/ /BREAK AROUND/ WITH SYMBOLS:

FKey RELIMIT SubMenu /BREAK/ /BREAK AROUND/ can be used in conjunction with symbols in flow charts or diagrams or other cases where a line must break around a symbol.

USING FKEY GROUP /TRAP/ STRETCH/ WITH SYMBOLS AND DIAGRAMS:

After the line has broken around a symbol, use FKey GROUP /TRAP/ /STRETCH/ to move a symbol, and have the lines either side of it automatically adjust their length.

USING MULTILINES WITH SYMBOLS IN DIAGRAMS:

Multilines can be very useful when making electrical, hydraulic or pneumatic diagrams involving symbols. Apply a multiline and adjust its position to suit the requirements of the diagram. Then apply the symbols as required. After the symbols are applied use the /CNVT/ multiline option to convert all multilines to regular lines. Now use the FKey RELIMIT /BREAK/ /BREAK AROUND/ option to cause the lines to break around the symbols. Use of FKey POINT /GRID/ /LOCKON/ will also assist in the construction of these diagrams.

MAKING YOUR OWN SYMBOL TABLES AND SYMBOLS:

Making your own symbol tables and symbols is not difficult, as long as you follow a few rules:

1. All symbol tables are regular MICRO CADAM drawings filed in ***SYS,SYMBOL***.

2. All symbol tables must be filed with names adhering to the following naming convention:

   a. **SYMTBXXX ,Y** (for example SYMTB119 or SYMTB121,1)

   b. The 'XXX' is the symbol table number. Be sure not to use existing numbers.

   c. The 'Y' can be any of the numbers 1, 64, 127 or 190. This is a way having up to 200 symbols in one symbol table for mainframe CADAM compatibility. Each CADAM drawing can have a maximum of 63 detail pages. The 'Y' number is a means of mapping the detail number to the symbol number. For example, Y = 1 means that detail page 1 is symbol # 1; Y = 64 means that detail page 1 is symbol # 64; Y = 127 means that detail page 1 is symbol # 127, and detail page two is symbol # 128, etc.

      The following are symbol name examples:

      SYMTB089

      SYMTB112,1 (Detail page #1 is symbol #1 of symbol table #112)
      SYMTB112,64 (Detail page #1 is symbol #64 of symbol table #112)
      SYMTB112,127 (Detail page #1 is symbol #127 of symbol table #112)
      SYMTB112,190 (Detail page #1 is symbol #190 of symbol table #112)

      The four separate SYMTB112,? models comprise a single symbol table #112. You may have up to 200 symbol tables and each symbol table may have up to 200 symbols.

3. Each SYMTBXXX,? model has geometry in its detail pages. The geometry on the detail pages will become the symbol geometry.

4. Each detail page may not include another symbol unless the symbol is a member of the same symbol table.

5. The pivot point of the geometry on the detail page is the pivot point of the symbol.

6. The detail cannot be scaled.

7. For a symbol that is to be filled follow these guidelines:

   a. There must be a continuous outer boundary. Unclosed elements, such as line segments, can ruin the fill pattern.

   b. There can be more than one fill boundary, but make sure to keep fill boundaries concentric or the symbol may not display properly.

8. Place dittos from each of the detail pages onto the front display page in view PV. The area of the symbol page displayed is the same position and size as the page that first appears when you call up the drawing. A good way to delineate the area available for symbol display is to call up the drawing and when it first displays the front page immediately access FKey LINE /HORZ/ and /VERT/ /UNLIM/ and INDICATE horizontal unlimited length lines at the upper and lower extremes of the display page, and vertical unlimited length lines at the left and right extremes of the display page. Corner these lines and you can now change your window size and position and still have your symbol display area marked. Erase these lines after the construction of the symbol display page is finished.

A diagram showing the construction details of a symbol table #5 (i.e. SYMTB005), and the symbols in that table is shown in Figure 16 on page 24-39.

CREATING A NEW SYMBOL TABLE:

Here is a detailed procedure for creating a new symbol table:

1. Change to group,user **SYS,SYMBOL** (use FKey FILE, select SubMenu /USER/ and key *sys,symbol*). Note that the information line near the top of the display screen will confirm that you are in sys,symbol.

2. Decide on the symbol table number you want to use. Check all existing numbers in that table and decide which symbol table number you want to use. It can be between 0 and 200. Lets use symbol table number 133.

3. Start a new drawing using symbol table number 133. Select FKey FILE and submenu /START/ and key in the file name ***SYMTB133,***. Note that the symbol table name must

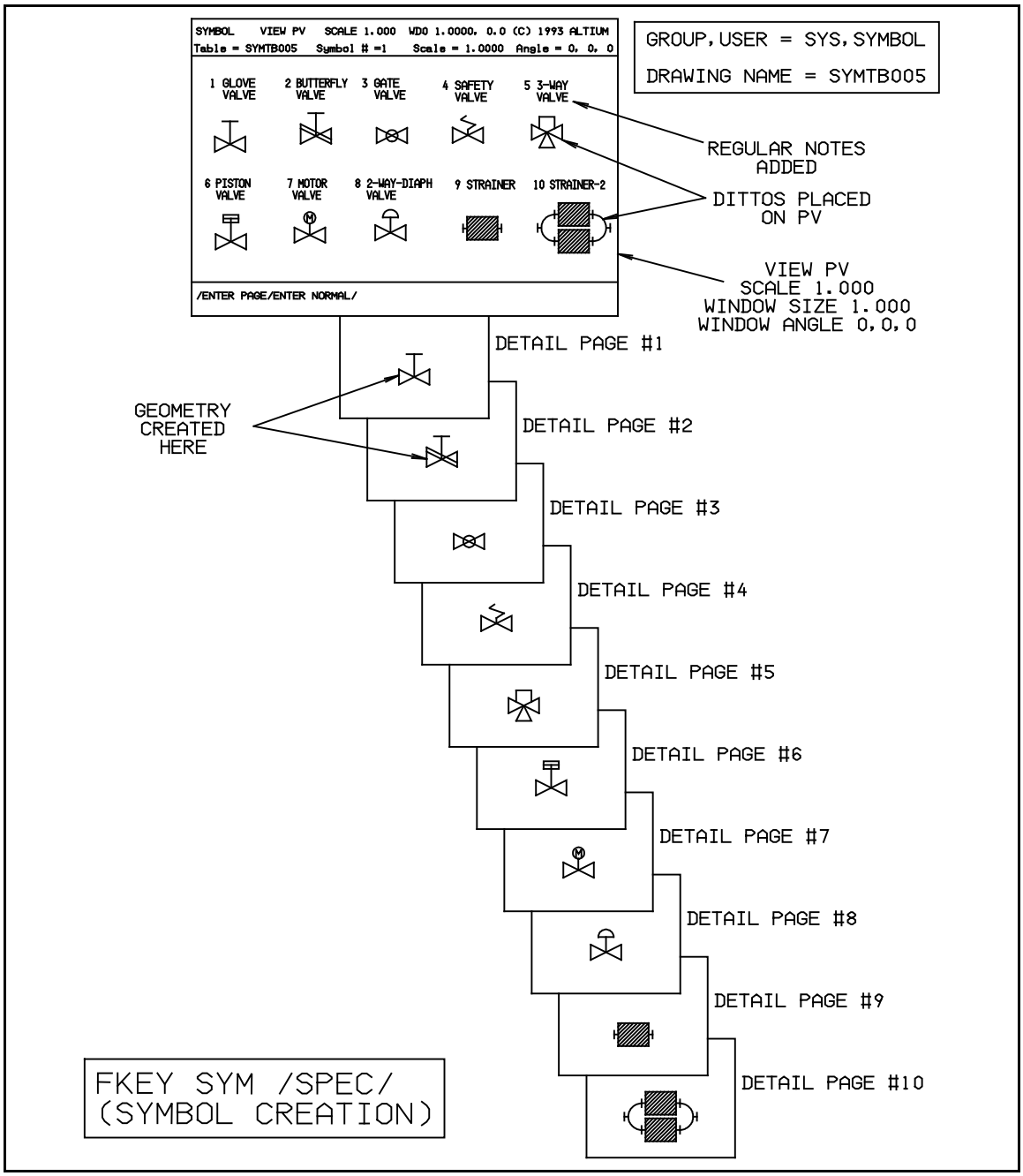

Figure 16 An example of symbol table construction

match this syntax exactly (the symbol table number may be different). Make sure to use a comma (,) immediately after the name since in this case we do not want a 4 character FN after the comma (i.e. we do not want more than 63 symbols in this symbol table).

4. Outline the symbol display area. As soon as you press the enter key after typing the file name (SYMTB113,) the new drawing will be started and a blank front page will appear. Notice that the window size is 1.000; the scale is 1.000; and the active view is PV.

   Press the YN button on your mouse to erase the axis arrows. Now before you move or resize the drawing, press FKey LINE and SubMenu /HORZ/ and indicate horizontal unlimited length lines at the extreme top and the extreme bottom of the display screen. Now select submenu /VERT/ and indicate unlimited vertical length lines at the extreme left and the extreme right of the display screen. Select FKey CORNER SubMenu /CORNER/ and corner the four lines. You are left with a rectangle that represents the area of the display screen that will be displayed when you access your symbol display page. Having the rectangle drawn on the front screen now allows you to move and resize your window repeatedly, and still return to the area of the screen where the symbols will display. (Note: This rectangle will be erased when you are finished with the symbol table creation.)

5. Start a new detail page. Select FKey DETAIL and SubMenu /START/. Detail page one will appear. (Note that the word *Detail* appears at the top of the screen information area. This is the only way that you know you are in a detail page.)

6. Create you symbol on this detail page using lines, circles, corner, relimit, etc.

7. When you are finished creating the symbol geometry on the detail page, select FKey DETAIL and SubMenu /PIVOT/ and select one point on the geometry that will become the pivot point of the detail page, and of the symbol.

8. Select SubMenu /RTN/ to return to the front page. (Note that the word *View* appears at the top of the screen information area. This is the only way that you know you are on the front display page.)

9. Repeat steps No. 5, 6, 7 and 8 to create geometry on additional detail pages. You may have a maximum of 63 detail pages in the drawing (and hence a maximum of 63 symbols in this one drawing).

10. Place dittos on the front page. After you have finished creating the geometry on the detail pages, return to the front page (FKey DETAIL and submenu /RTN/). Make sure that the word *View* appears at the top of the display page.

    Select FKey DETAIL and submenu /DITTO/ and press the YN button on your mouse to let the system know you want to key in the number of the detail page that you want to use to make a ditto. Key in the number 1. Now indicate on the front page (and inside

the rectangle just drawn) and the ditto will appear. You may use FKey GROUP submenu /TRANSLATE/ /SCALE/ to reduce the size of the ditto if necessary. You may also find FKey POINT and submenu /GRID/ useful for displaying a grid to help you space the dittos.

Repeat the process and apply dittos for the rest of the detail pages.

11. Add descriptive text next to each ditto. If necessary you may add descriptive text next to each ditto. Size and position the text as required. The text will not become part of the symbol.

12. Remove the lines forming the rectangle drawn in step no. 4. Use FKey SHOW and submenu /ERASE/.

13. Attach text to the drawing name. Descriptive text may be attached to the drawing name. This text is automatically displayed when the symbol table list is displayed. To attach text to the file name select FKey /FILE/ and submenu /TEXT/. You will be presented with a text display page. Key in the symbol table descriptive text at the bottom of the screen and press the enter key. The text will appear on the screen in the graphical display area. Press the YN button on your mouse to return to the front display page.

14. File the drawing. Select FKey FILE and press the YN button on the mouse to file with the name *SYMTB113,*. Your symbol table has now been created and filed.

15. Change to your working group,user and use the symbol table. Select FKey FILE and submenu /USER/ and key *CAD,TRAIN* (assuming you are returning to cad,train to work). Call up an existing drawing, or start a new drawing. Select FKey SYMBOL and submenu /SPECIAL/ and /TBLS/ and you are presented with a list of symbol tables.

    (Note: If the message *Table not found* appears you may have to change to the drive where the symbol table resides. MICRO CADAM CORNERSTONE defaults to drive C, so if you have loaded the program on drive D, you will have to change the submenu /DRV/ to reflect drive D).

    Select SYMTB113 from the display screen. This is now your active symbol table. You are returned to your drawing.

    Select submenu /PAG/ and you are presented with the symbol display page for symbol table No. 113. Select the symbol you want to use and you are returned to your drawing. Indicate or select a position where you want the symbol displayed, and the symbol will appear.

Modify the symbol if necessary by using /SCL/, /ROT/, /XFLIP/, /YFLIP/, /NRML/, /FIL/, /HTCH+45/, /HTCH-45/

CHAPTER 25

FKey AUXVIEW

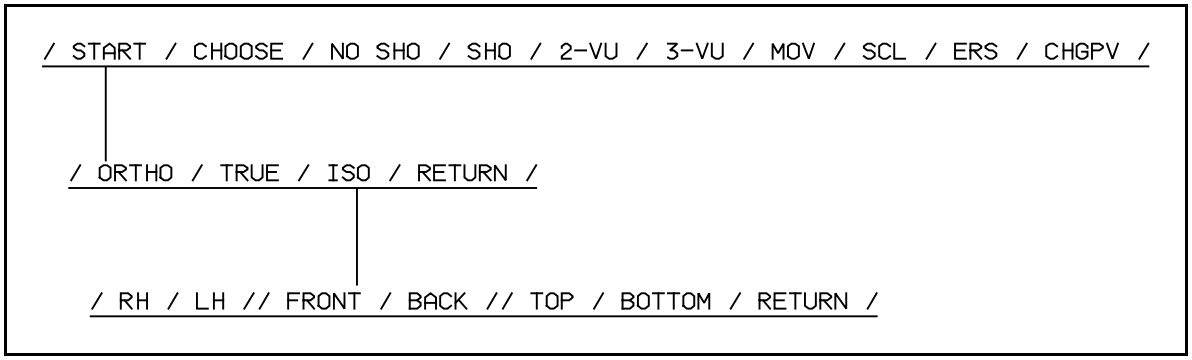

Figure 1 Menu Item Tree for FL AUXVIEW

MICRO CADAM is unique in that it is a 2½ D product and works with auxiliary views. Each auxiliary view is mathematically related to every other view. Thus there is *intelligence* between the views and each view *knows* where the other views are located.

Another way of describing MICRO CADAM 2½ D software is that it has the ease of use of 2D and the power of 3D.

Each MICRO CADAM drawing can have up to 63 Auxiliary views. Auxiliary views can be thought of as transparent foils on top of an overhead projector; when looking at them on the screen they all appear to be a single drawing. However if you take a marker and start to draw on top of the pile of foils, only the foil on top is actually being drawn on. The foil on top is called the ACTIVE Auxiliary View. Auxiliary views can be 'shuffled' to the top by using the Sub Menu function CHOOSE so that information can be added or deleted, or so information can be projected between auxiliary views. Figure 2 on page 25-2 shows this transparency analogy.

With FKey AUXVIEW you can develop the following types of views:

- Orthographic view
- Axonometric view

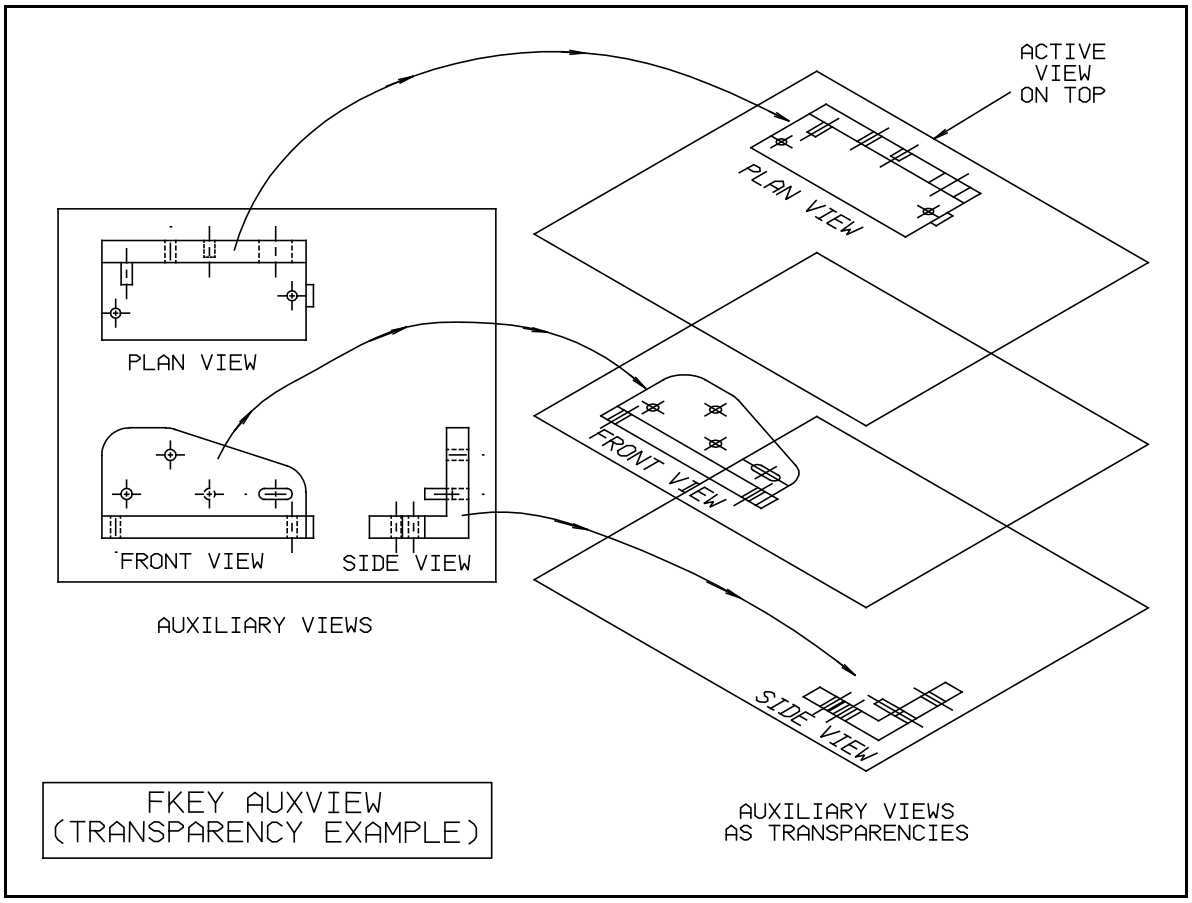

Figure 2 Auxiliary Views as transparencies

- Isometric view
- True view

ORTHOGRAPHIC VIEWS:

Orthographic views permit a three dimensional object to be drawn on a single plane, such as a sheet of paper. One, two, three, or more orthographic views of the object can be created. As many views as necessary to completely describe the object are drawn. Examples of orthographic views can be seen on Figure 3 on page 25-3.

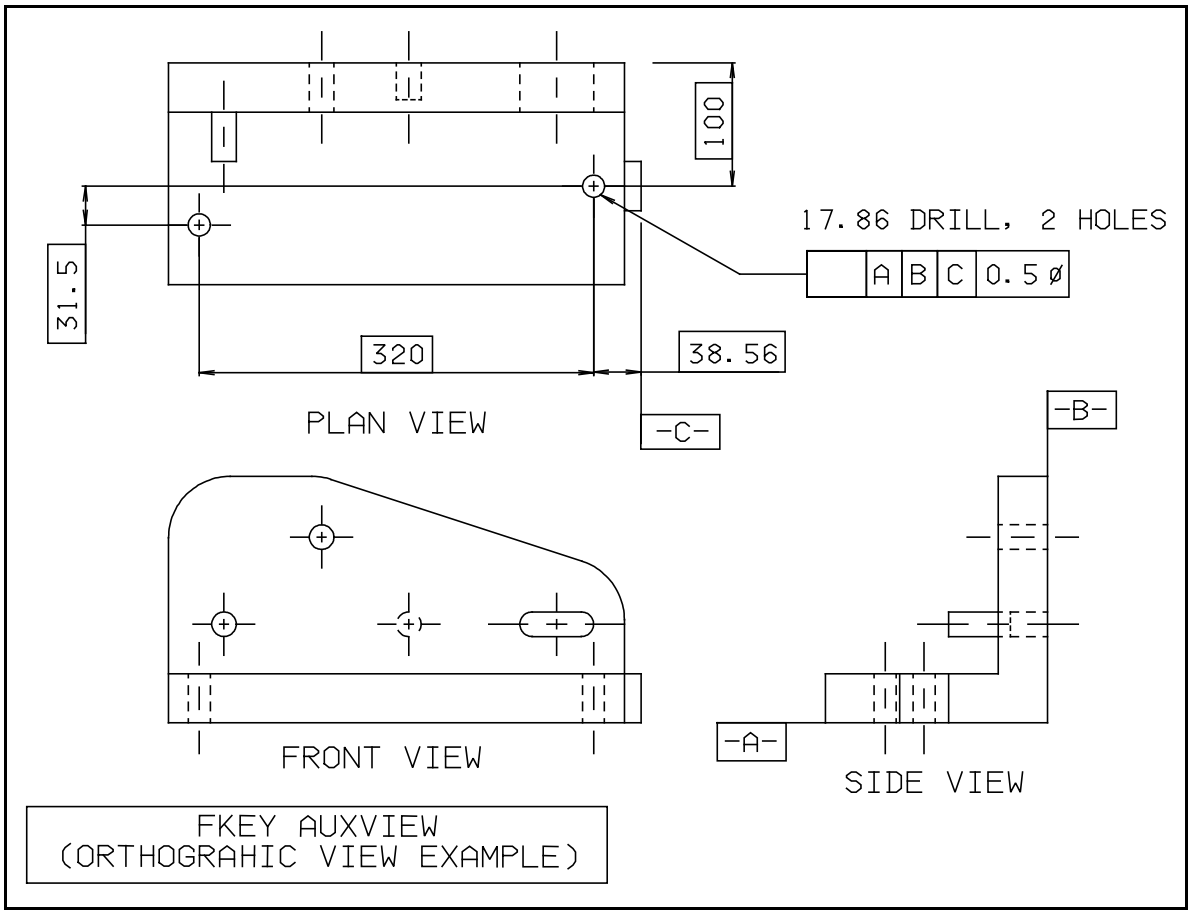

Figure 3 Examples of orthographic views

AXONOMETRIC VIEWS:

In axonometric views the object is displayed at any rotational angle around the X, Y, Z axes. The angles are chosen such that the three faces of an object are shown in a single view, and projected onto a plane. An axonometric view is created semiautomatically using information from existing orthographic views. An axonometric view allows you to draw an object rotated at any angle in 3D space. Examples of axonometric views can be seen in Figure 4 on page 25-4.

ISOMETRIC VIEWS:

An isometric view is a special case of an axonometric view in which the rotational angles around the X, Y, and Z axes are predefined. MICRO CADAM has eight predefined isometric angles available for use. An example of an isometric view is shown in Figure 5 on page 25-5.

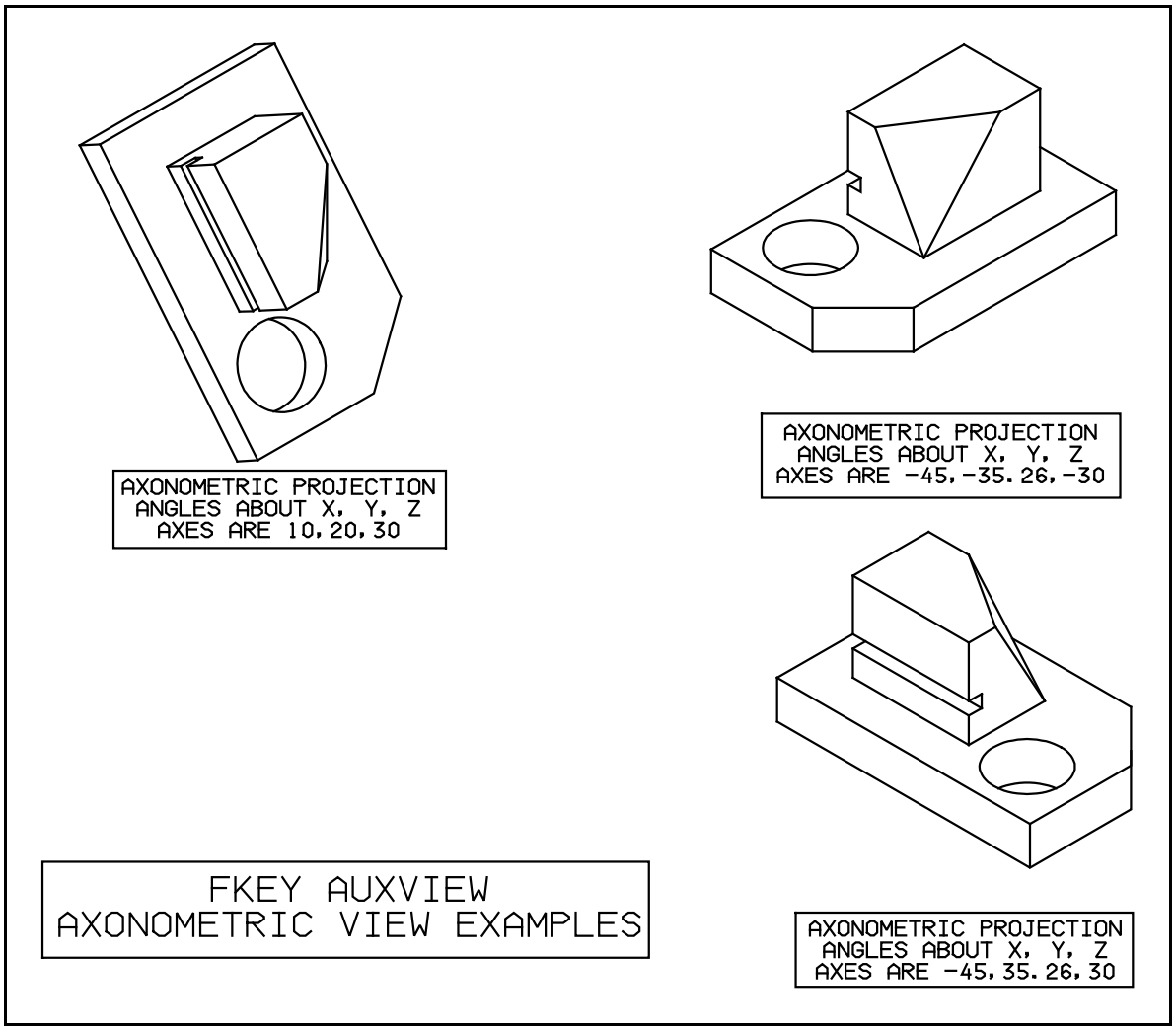

Figure 4 Examples of axonometric views

Axonometric and isometric projections are useful for purposes such as illustrative drawings, installation and maintenance drawings, educational aids, design sketches, complicated mechanical drawings, and proposal drawings for the architectural and mechanical designer.

TRUE VIEWS:

You can create a true view of an inclined or skew plane by defining the desired plane and establishing a line of sight normal to that plane. The resulting view shows the true relationship of the geometry in that plane. An example of a true view is shown in Figure 6 on page 25-6.

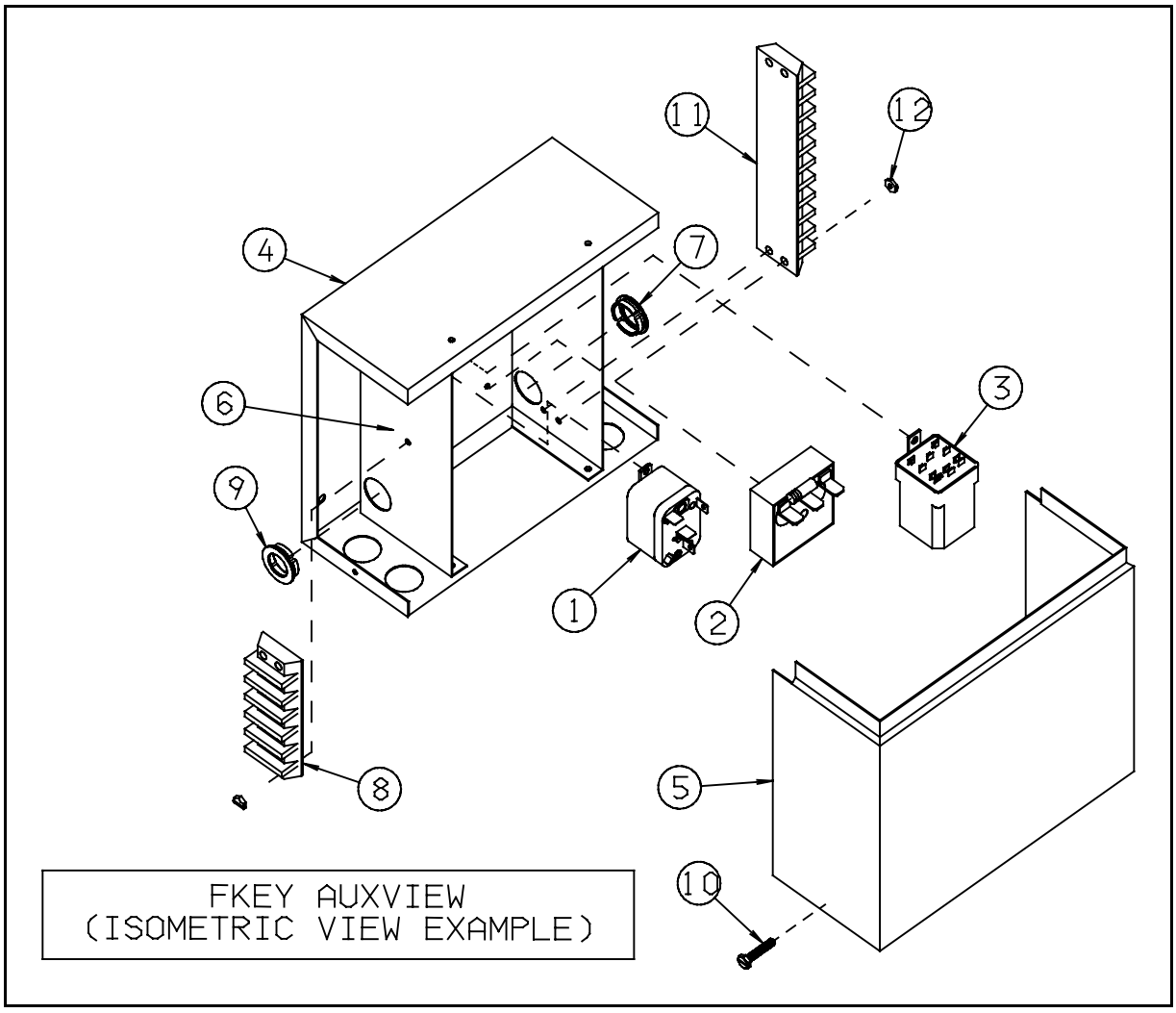

Figure 5 An example of an isometric view.

OTHER USES FOR AUXILIARY VIEWS:

ENLARGED DETAIL VIEWS:

Auxiliary views can also be used to construct enlarged detail views. There are many situations where small details on an object must be enlarged for both viewing and dimensioning. MICRO CADAM handles these by creating an auxiliary view with a larger scale and copying the detail geometry into this view. The geometry is always full size and drawn to scale, but the picture is larger.

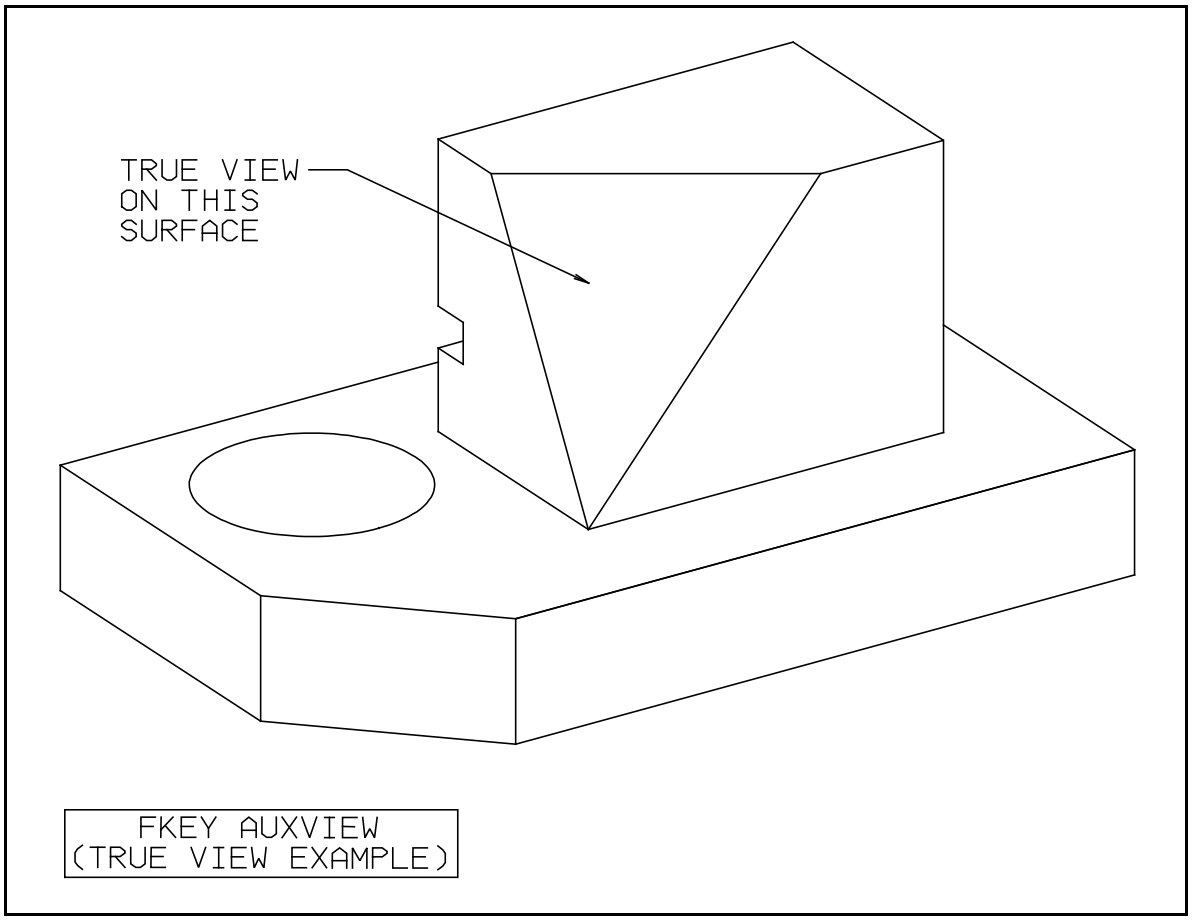

Figure 6 An example of a true view.

STARTER FORMATS:

Auxiliary views are also used to hold starter formats. A starter format is an outline of your drawing paper (drawn full size) and contains title block information and plot data which tells the program which part of the drawing to plot, and what scale to plot it at. In the CADAM user world the starter format is commonly placed on an auxiliary view called *View 99*. View 99 has a scale of 1.0 (full size) because your paper is full size.

AUXILIARY VIEWS USED AS LAYERS:

Auxiliary views can also be used as layers of a drawing. You can have up to 63 layers (i.e. auxiliary views) on a single drawing. Each view can be shown or no shown and can be moved and realigned with other views.

FUNCTION KEY AUXVIEW SUBMENU OPTIONS:

- /START/ Allows you to start a new auxiliary view and define its axis block and location. There are three available view choices:
  - /ORTHO/ Allows you to construct standard orthographic views of an object.
  - /TRUE/ Allows you to construct a true view on an inclined or skew plane.
  - /ISO/ Allows you to construct an axonometric or isometric view of a solid object from three orthographic views.
    - /RH/ Constructs a right hand isometric view.
    - /LH/ Constructs a left hand isometric view.
    - /FRONT/ Constructs a front isometric view.
    - /BACK/ Constructs a back isometric view.
    - /TOP/ Constructs a top isometric view.
    - /BOTTOM/ Constructs a bottom isometric view.
    - /RETURN/ Returns you to the next higher level in the menu.
  - /RETURN/ Returns you to the next higher level in the menu.
- /CHOOSE/ Allows you to make an existing view current (i.e. active).
- /NO SHO/ Allows you to temporarily no show an auxiliary view (i.e. move it into the no show world).
- /SHO/ Redisplays an entire view, all or part of which was temporarily concealed.
- /2-VU/ Used to develop a second view and any subsequent views from another view. Construction of lines representing X and Y coordinates can be projected from an existing view into the active view. Unlimited length lines are projected from existing points and circle tangents.

  Also projects lines tangent to a circle to create the edges of a cylinder in

an isometric view.

- /3-VU/ Used to develop a third view and any subsequent views from two other views.

- /MOVE/ Used to relocate and/or rotate a view with respect to its own origin, but without affecting its relationship to any other views. All views still remain geometrically connected.

- /SCL/ Used to change the scale of a view without affecting its relationship to other views. This scale is used exactly like the engineering/drafting scale on a manual drafting board.

- /ERS/ Used to erase an entire view in one operation. The primary view cannot be erased, and neither can a parent view on which other views are dependent.

- /CHGPV/ Used to designate an auxiliary view as the primary view, an exchange their identities. THIS OPTION IS RARELY USED BECAUSE OF ITS IMPACT ON OTHER VIEWS.

FKey AUXVIEW

SUBMENU /START/

AND

SUBMENU /START/ /ORTHO/

FKEY AUXVIEW /START/ CONCEPTS:

FKey AUXVIEW SubMenu /START/ allows you to start an auxiliary view. Orthographic, True, Axonometric and Isometric views can be started. Orthographic views can be started from any existing view. True, Axonometric and Isometric views ***MUST*** be started from view PV (i.e. with View PV being the active view).

ORTHOGRAPHIC VIEW CONCEPTS (FKEY AUXVIEW /START/ /ORTHO/):

Orthographic views permit a three dimensional object to be drawn on a single plane, such as a sheet of paper. In each orthographic view the object is viewed perpendicular (i.e. normal) to the main face such that one face of the object is depicted in each view.

There are two types of orthographic projection. They are:

- Third Angle
- First Angle

Third Angle orthographic projection is used in Canada and the United States. First Angle projection is used in Europe. MICRO CADAM allows you to select the type of orthographic projection you want to use. If you press FKey FILES and submenu /UNITS/ you will be presented with a display screen that has an area called **VIEW CONV**. An asterisk (i.e. "*") will appear beside the active view convention. All orthographic views in this book will be third angle. All comments regarding 3rd angle projection also apply to 1st angle projection.

To understand how MICRO CADAM handles multiple orthographic views, imagine that the object you are drawing is inside a glass box. Each of the six sides of the glass box is considered to be an auxiliary view, and the images of the object (top, front, right, side, etc.) are projected onto each of the sides of the box. A graphic showing this glass box is shown in Figure 7 on page 25-11.

When MICRO CADAM creates orthographic views, it unfolds this glass box and displays the projected images onto a flat plane. A graphic showing the glass box (with its projected images) laid flat onto a plane is shown in Figure 8 on page 25-12.

Every MICRO CADAM drawing has an auxiliary view called View PV. Each auxiliary view has a 2 character designation. In this case the 2 character designation PV stands for *Plan View* or *Primary View*. Other common designations are FV (Front View), SV (Side View), TR (True View), IS (Isometric View) and 99 (View 99 ... this is where the starter format is located. Please see the chapter on Plotting for more information on the starter format).

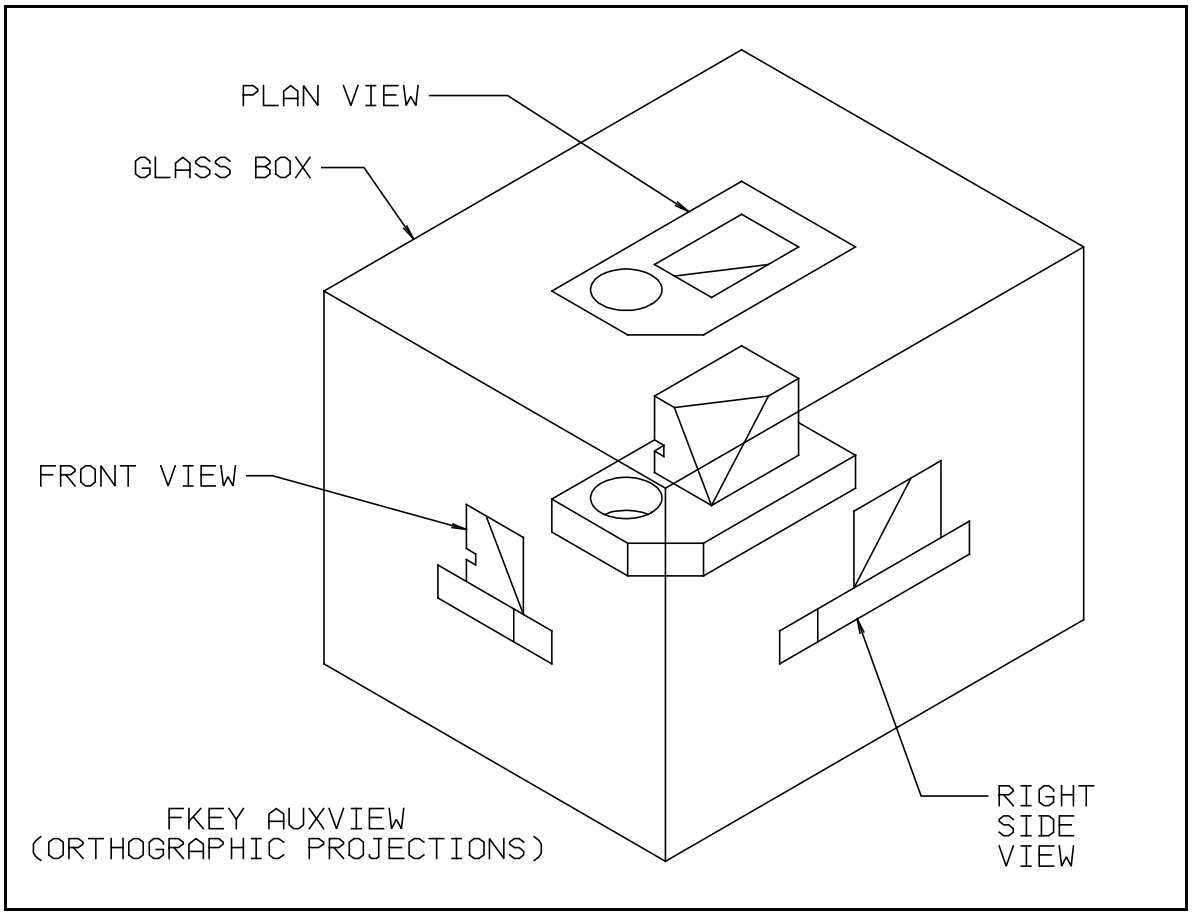

Figure 7 The glass box analogy of multiple orthographic views

There are several important things to be aware of regarding auxiliary views:

1. If you try to select an element and nothing happens, it may be on a different auxiliary view. To find out, select FKey AUXVIEW and submenu /CHOOSE/. Select the element again and look near the top of the display screen to see if the view designation changes (submenu /CHOOSE/ allows you to select elements in other nonactive views). If the view designation does change (for example from PV to FV), the element was in another view and you have now made that view active (i.e. moved it to the top of the transparency stack). Return to your previous function and you will now be able to select the element.

2. Auxiliary views and detail pages take up the same 'memory' space in the computer. Thus you cannot put auxiliary views on a detail page.

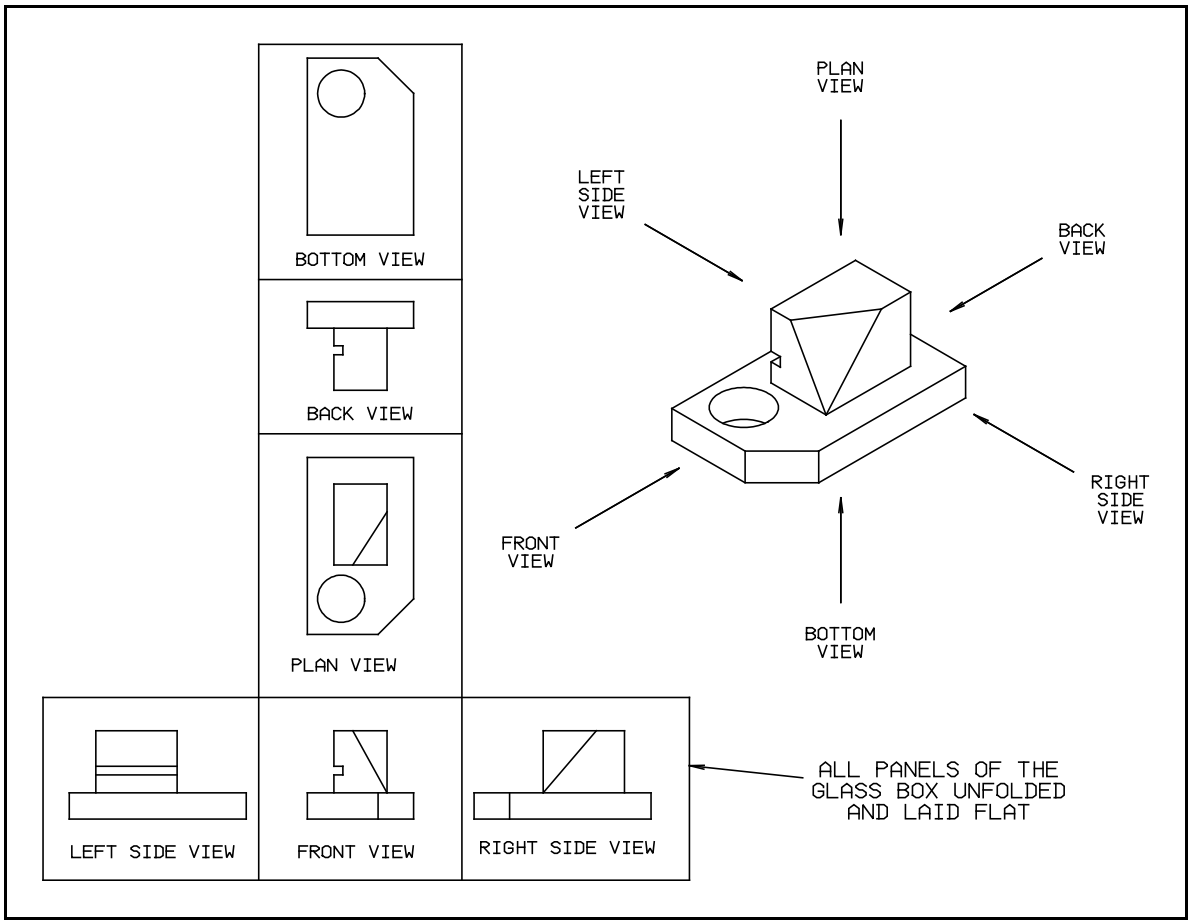

Figure 8 The auxiliary view glass box unfolded onto a flat plane

3. In each auxiliary view, the Y axis always points back to the parent view (i.e. the view that was referenced to create the auxiliary view).

4. In all orthographic views, except the primary view, the Y axis defines the height of the object being drawn. In the primary (or top) view, the Y axis defines the depth of the object.

5. There is a submenu option under FKey AUXVIEW called /CHGPV/ that allows you to exchange the identity of your present active view with the existing primary view. THIS OPTION IS RARELY USED BECAUSE OF ITS IMPACT ON OTHER VIEWS. Before switching the identities of the primary view and another view, carefully consider the effect such a change will have on later operations.

CREATING ORTHOGRAPHIC VIEWS USING LINE OF SIGHT:

To create an orthographic view using a line of sight, follow these steps:

A) CALL A STARTER FORMAT AND FILE IT WITH A DIFFERENT NAME:

A starter format is MICRO CADAM drawing that already has the drawing border, plot data, title block and auxiliary views created on a blank drawing. (See the chapter on Plotting for more information). Follow these steps:

1. **Change your GROUP,USER to CAD,FORMAT:** Select FKey FILE and submenu /USER/. The menu prompt ***Key Group,User*** appears near the top of the screen. Key *CAD,FORMAT*. The GROUP,USER will now change to CAD,FORMAT and this is confirmed by the information line near the top of the display screen on the right side. (Note: CAD,FORMAT is where all starter formats are located).

2. **Call up the starter format:** Submenu /CALL/ is underlined by default. Press the Y/N button on the mouse and a list of MICRO CADAM drawings is displayed. Select the drawing with the name *STARTER A ,IN*. (Select submenu /FWD/ or /BACK/ if necessary to flip through the display pages). After selecting the drawing, it will be loaded from the hard disk and into computer memory. You are now returned to the front page of the drawing.

3. **Change to your working GROUP,USER and refile the drawing with a different name:** Select submenu /USER/ and key the GROUP,USER name *CAD,TRAIN*. Your working GROUP,USER is now CAD,TRAIN. Select submenu /FILE/ and key in the drawing name ***BLOCK DRAWING,ORTH***. After you press the enter key on the keyboard the message ***Drawing filed*** will appear near the top of the display screen. You are now ready to start drawing the first orthographic view.

B) PREPARE TO CONSTRUCT THE FIRST ORTHOGRAPHIC VIEW (PLAN VIEW):

A fully dimensioned plan (primary) view is shown in Figure 9 on page 25-14. Refer to this figure for dimensions as you construct the plan view.

4. **Place a point at the origin of View PV**. Select FKey POINT and press the enter key twice. This will place a point at the origin of the view.

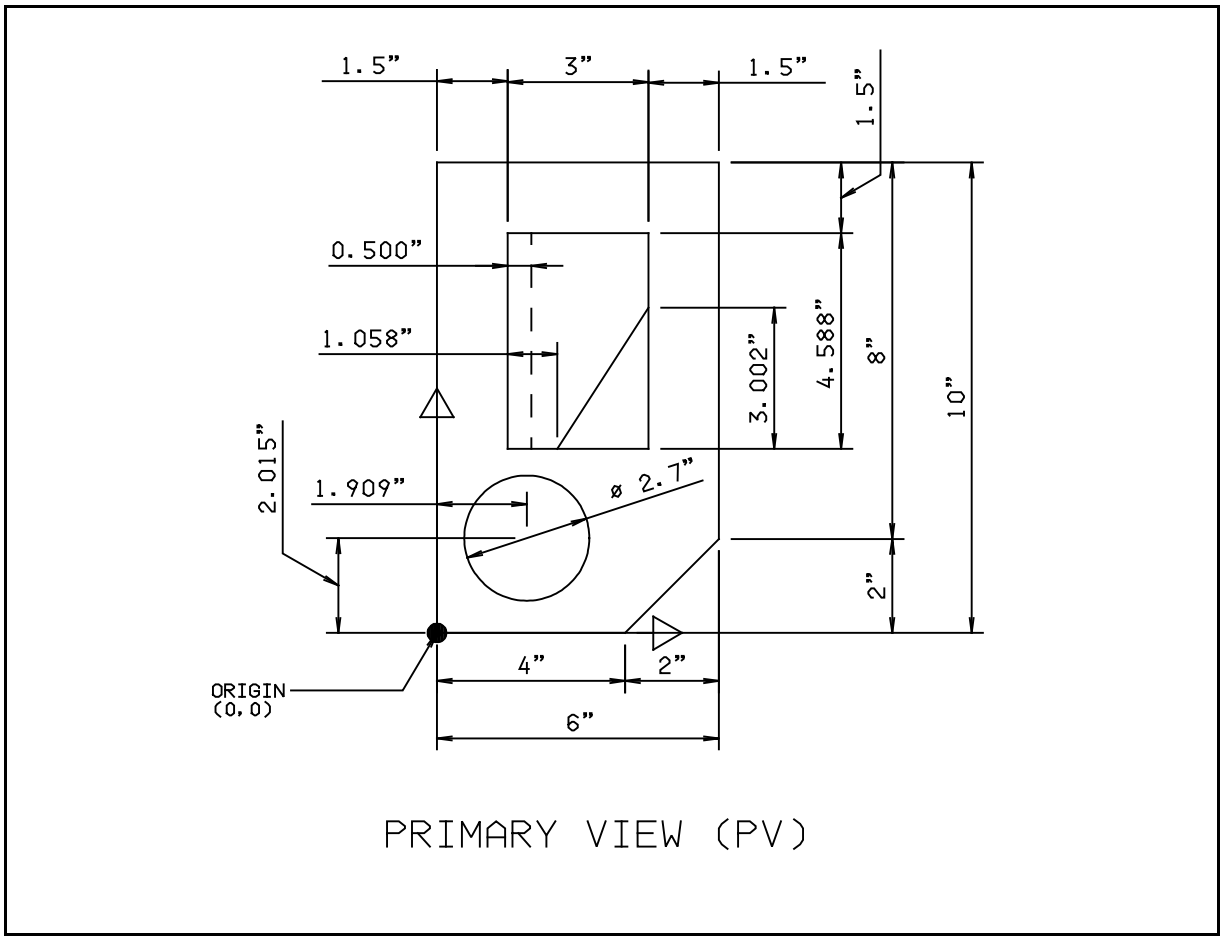

Figure 9 The primary (plan) view fully dimensioned.

5. **Move View PV to a suitable location on the starter format and change the view scale**. Select FKey AUXVIEW and submenu /MOV/ and indicate twice in a location where you want the origin of the view to move. This effectively *slides* the auxiliary view PV transparency around on top of the starter format. Move View PV to the top left quadrant of the starter format. You can reposition it again later if you want to. To change the auxiliary view scale select submenu /SCL/. The menu prompt ***Key scale*** appears. Key .375. The auxiliary view scale is now .375:1. You are now ready to construct geometry in the first orthographic view (View PV).

C) CONSTRUCT GEOMETRY IN THE FIRST ORTHOGRAPHIC VIEW (VIEW PV):
The geometry in the plan (i.e. primary) view will now be constructed.

6. Select FKey LINE and submenus /VERT/ and /LENGTH/. The menu prompt ***Key X,Y / Ind pt / Sel element*** appears. Select the origin point (i.e. 0,0) of view PV. The menu prompt ***Key length = 0.000 / Sel any element*** appears. Key in a length of 10. The menu prompt ***Ind direction*** appears. Indicate above the origin. Line 1 is drawn.

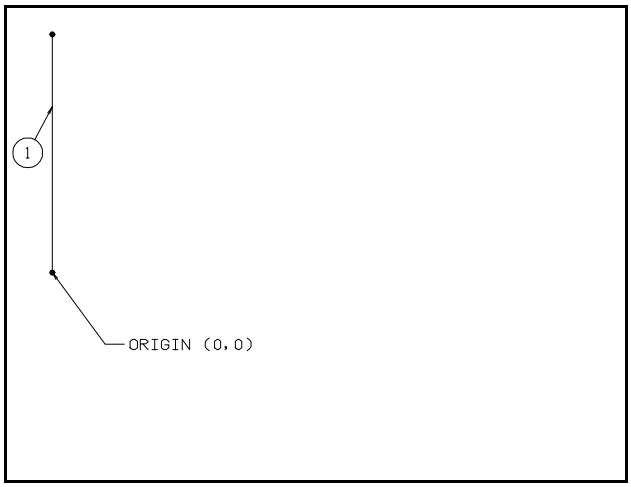

7. Select submenu /HORZ/ (/LENGTH/ remains underlined). The menu prompt ***Key X,Y / Ind pt / Sel element*** appears. Select the origin point of view PV. The menu prompt ***Key length = 10.000 / Sel any element*** appears. Key in a length of 4. The menu prompt ***Ind direction*** appears. Indicate to the right of the origin. Line 2 is drawn.

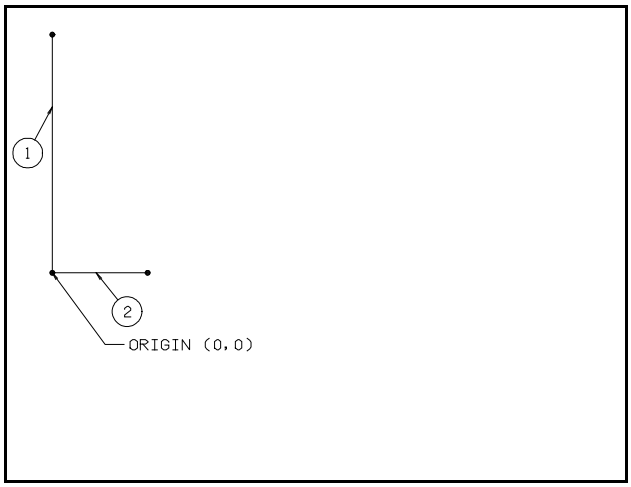

8. You are still on submenus /HORZ/ and /LENGTH/. The menu prompt ***Key X,Y / Ind pt / Sel element*** appears. Select the point at the top of line 1. The menu prompt ***Key length = 4.000 / Sel any element*** appears. Key in a length of 6. The menu prompt ***Ind direction*** appears. Indicate to the right of the point. Line 3 is drawn.

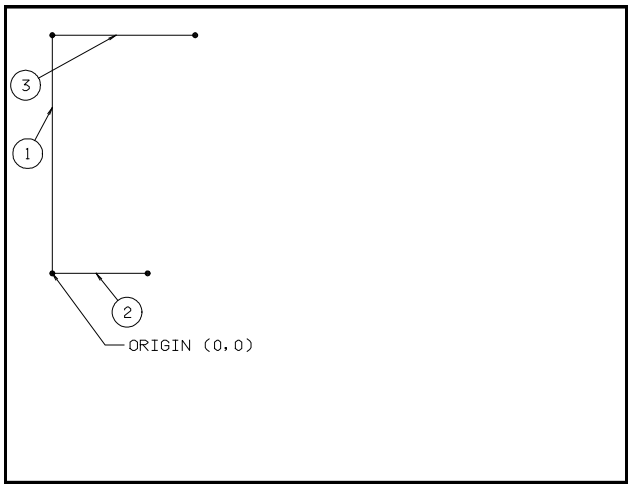

9. Select submenu /VERT/ (submenu /LENGTH/ remains underlined). The menu prompt ***Key X,Y / Ind pt / Sel element*** appears. Select the point at the right side of line 3. The menu prompt ***Key length = 6.000 / Sel any element*** appears. Key in a length of 8. The menu prompt ***Ind direction*** appears. Indicate below the point. Line 4 is drawn.

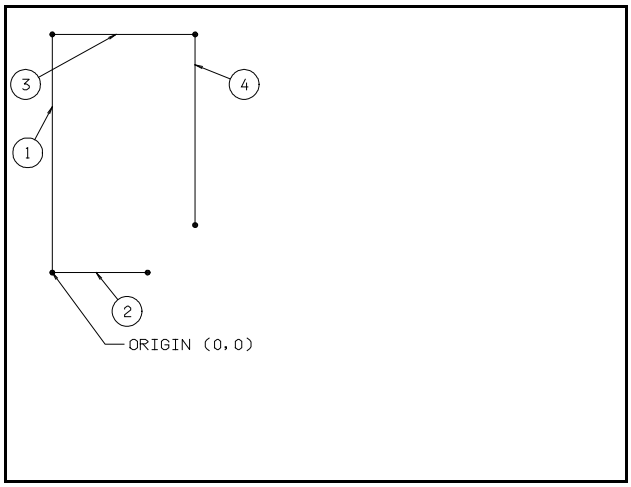

10. Select submenu /PT-PT/ (submenu /LENGTH/ remains underlined). The menu prompt ***YN chain mode*** appears. Select the point at the right end of line 2 and the bottom of line 4. Line 5 is drawn.

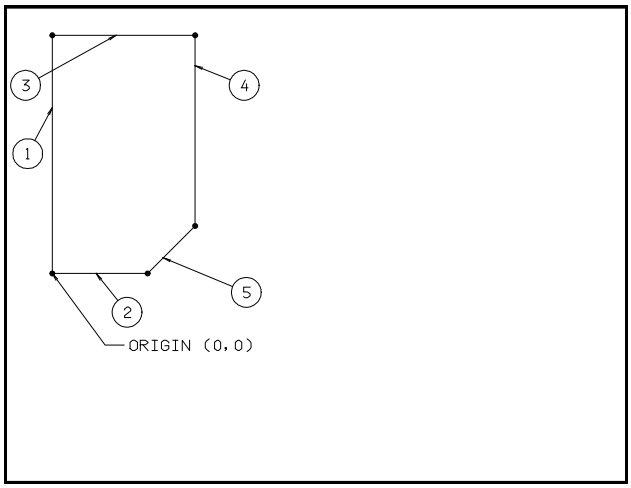

11. Select FKey CIRCLE. The menu prompt ***Key X,Y,R / Sel pt,ang,ln / Ind pt / YN arc*** appears. Key in 1.909, 2.015, 1.35. Circle 6 is drawn.

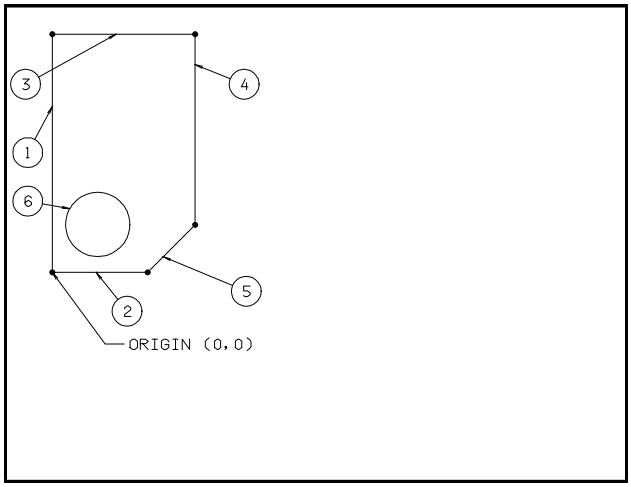

12. Select FKey OFFSET. The menu

prompt ***Sel element*** appears. Select Line 3. The menu prompt ***Sel element / Ind dir*** appears. Indicate below line 3. The menu prompt ***Key offset = 0.0000,Num=1*** appears. Key in an offset of 1.5. Offset line 7 is drawn.

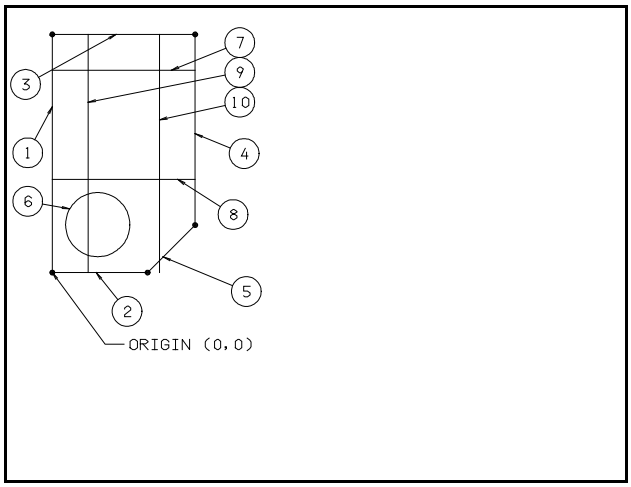

Select the line just created (Line 7). The menu prompt ***Sel element / Ind dir*** appears. Indicate below line 7. The menu prompt ***Key offset = 1.5000,Num=1*** appears. Key in an offset of 4.588. Offset line 8 is drawn.

Select Line 1. The menu prompt ***Sel element / Ind dir*** appears. Indicate to the right of line 1. The menu prompt ***Key offset = 4.5880,Num=1*** appears. Key in an offset of 1.5. Offset line 9 is drawn.

Select the line just created (Line 9). The menu prompt ***Sel element / Ind dir*** appears. Indicate to the right of line 9. The menu prompt ***Key offset = 1.5000,Num=1*** appears. Key in an offset of 3. Offset line 10 is drawn.

13. Select FKey CORNER. The menu prompt ***Sel element 1*** appears. Select Line 7. The menu prompt ***Ind end saved / sel element 2*** appears. Select Line 9. The menu prompt ***Ind intersect / Sel pt,ln or menu / Key rad=0.0000*** appears. Indicate inside the rectangle formed by lines 7, 8, 9 and 10. Lines 7 and 9 are cornered at their intersection.

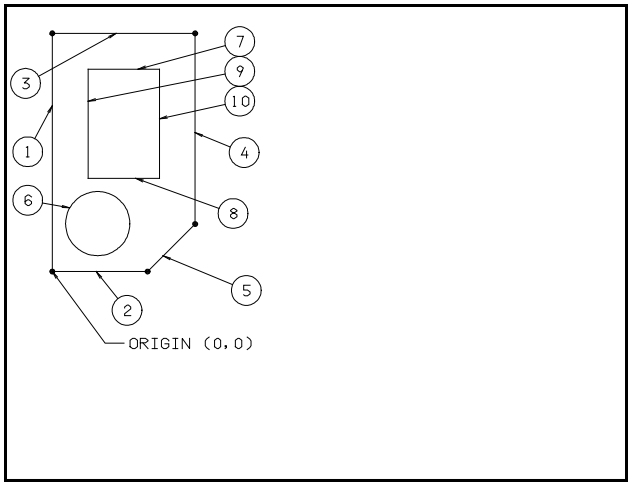

Select Line 7. The menu prompt ***Ind end saved / sel element 2*** appears. Select Line 10. The menu prompt ***Ind intersect / Sel pt,ln or menu / Key rad=0.0000*** appears. Indicate inside the rectangle formed by lines 7, 8, 9 and 10. Lines 7 and 10 are cornered at their intersection.

Select Line 8. The menu prompt ***Ind end saved / sel element 2*** appears. Select Line 10. The menu prompt ***Ind intersect / Sel pt,ln or menu / Key rad=0.0000*** appears. Indicate inside the rectangle formed by lines 7, 8, 9 and 10. Lines 8 and 10 are cornered at their intersection.

Select Line 8. The menu prompt ***Ind end saved / sel element 2*** appears. Select Line 9. The menu prompt ***Ind intersect / Sel pt,ln or menu / Key rad=0.0000*** appears. Indicate inside the rectangle formed by lines 7, 8, 9 and 10. Lines 8 and 9 are cornered at their intersection.

14. Select FKey POINT. Select the point at the intersection of line 8 and line 9. The menu prompt ***Key DX / Key DX,DY / Sel any element / Ind quadrant*** appears. Key 1.058,0. A first point appears.

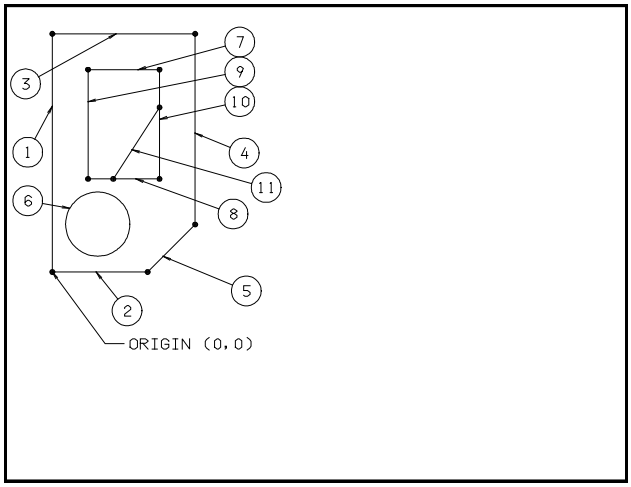

Select the point at the intersection of line 8 and line 10. The menu prompt ***Key DX / Key DX,DY / Sel any element / Ind quadrant*** appears. Key 0,3.002. A second point appears.

Select FKey LINE and submenus /PT-PT/ and /LENGTH/. The menu prompt ***YN chain mode*** appears. Select the first point and the second point created. Line 11 is drawn.

15. Select FKey OFFSET. The menu prompt ***Sel element*** appears. Select Line 9. The menu prompt ***Sel element / Ind dir*** appears. Indicate to the right of line 9. The menu prompt ***Key offset = 0.0000,Num=1*** appears. Key in an offset of .5. Offset line 12 is drawn. Select FKey TYPE and submenus /STYLE/ and /DASH/. Select line 12 and it will change from a solid line to a dashed line. Select FKey POINT and submenu /DEF PTS/ and select line 12. Pts will appear at either end.

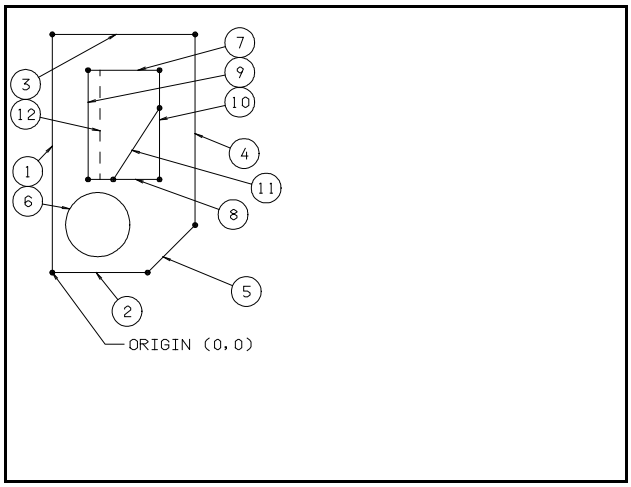

D) START A RELATED AUXILIARY VIEW (ORTHOGRAPHIC VIEW FV (FRONT VIEW)):

Up to this point you have been working in the 2D world. You are about to leave the 2D world now and enter the 2½ D world as you start a front view and project geometry into it.

16. Select Fkey AUXVIEW and submenu /START/. Submenu /ORTHO/ is underlined by default. (This is the option you want because you are starting an ORTHOGRAPHIC view). The menu prompt ***Sel line of sight / YN section line*** appears. (Note that the word *View PV* is displayed near the top of the display screen. View PV is the active auxiliary view).

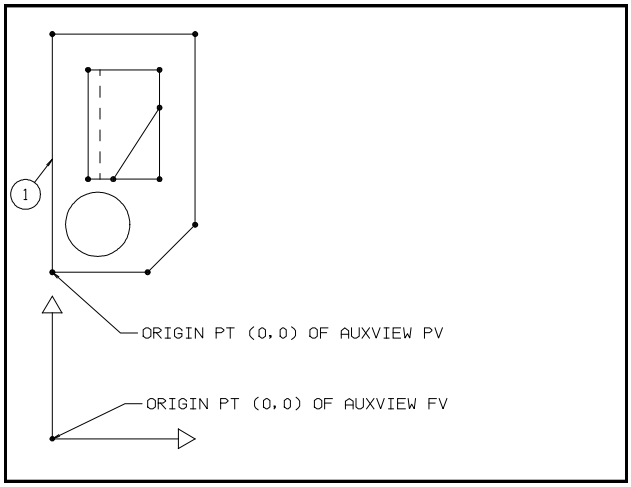

17. The line of sight can be any line in view PV that determines the ***direction*** that you are looking when constructing the orthographic view. You would normally select a vertical line through the origin, since that is the direction that you are looking when creating view FV (Front View). Should you want to create an orthographic view in another direction you will have to draw a line in that direction first. Note that you should select a line through the origin of the existing view since it is preferable to have the origins of the auxiliary views line up.

    Select line 1 to determine the direction of sight. The menu prompt ***Sel point*** appears.

18. Select the origin point of view PV. (This point is used as a reference to determine which side the new orthographic view will be created on). The menu prompt ***Ind axis*** appears.

19. Indicate below the origin of view PV. The indicated location will become the origin of View FV. (The Y axis of the new view will point from this indicated location back towards the selected point (the origin of PV in this case)). The menu prompt ***Key scale = 0.375*** appears.

20. Press the Y/N button on the mouse to accept the auxiliary view scale. (Notice that this is the same scale as view PV). The menu prompt ***Key ID*** now appears.

21. Key FV (i.e. Front View) as the view ID. (You may key any two character designation for the auxiliary view name).

22. The origin now appears and the orthographic auxiliary view FV is created. (Note that the word *View FV* is now displayed near the top of the display screen). Notice that the Y axis points back towards view PV. The menu prompt ***YN remove axis block*** appears near the top of the display screen.

23. Press the Y/N button on the mouse to remove the axis block. The axis block disappears.

24. Place a point at the origin of the new auxiliary view FV. Select FKey POINT and press the enter key twice. A point appears at the origin of view FV.

E) CONSTRUCT GEOMETRY IN THE SECOND ORTHOGRAPHIC VIEW (VIEW FV):

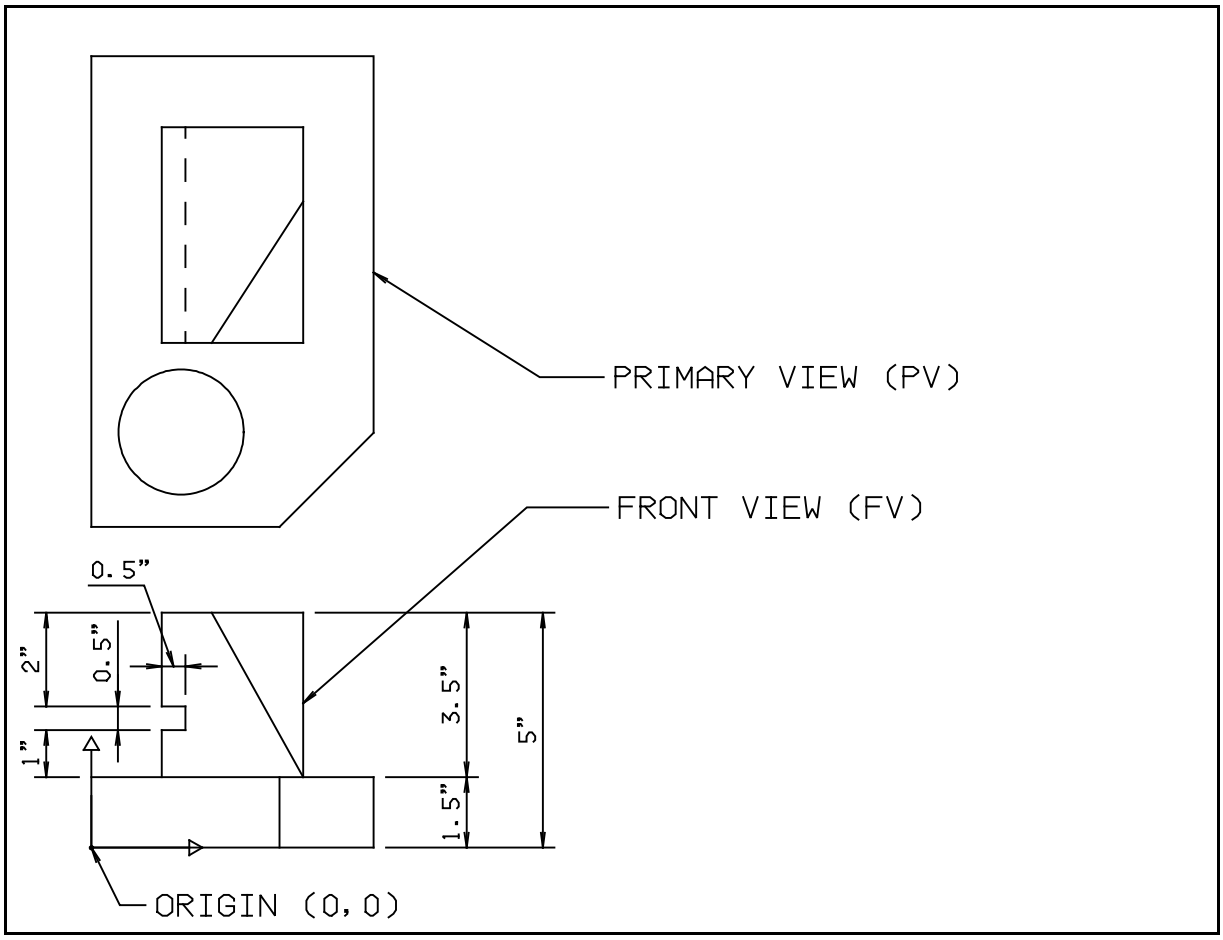

Figure 21 Dimensions in the front view (FV) required for construction

A front view (view FV) is shown in Figure 9 on page 25-20 with all the dimensions required to

construct it. Refer to this figure for dimensions as you construct the front view.

25. **Project information *from* view PV *into* view FV.** (NOTE: the message ***View FV*** appears near the top of the display screen).

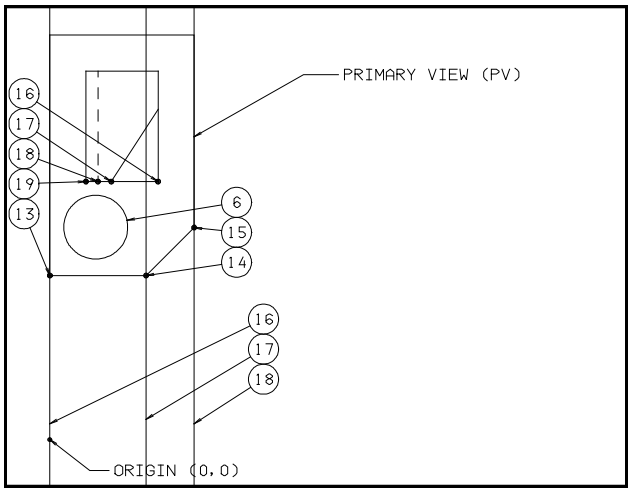

Select FKey AUXVIEW and submenu /2-VU/. The menu prompt ***Sel point / Sel circle*** appears.

Select point #13 in view PV. Line #16 is created and the menu prompt ***Sel point / Sel circle / YN erase-restore*** appears.

Select point #14 in view PV. Line #17 is created and the menu prompt ***Sel point / Sel circle / YN erase-restore*** appears.

Select point #15 in view PV. Line #18 is created and the menu prompt ***Sel point / Sel circle / YN erase-restore*** appears.

26. **Create lines representing the top and bottom of the plate.**

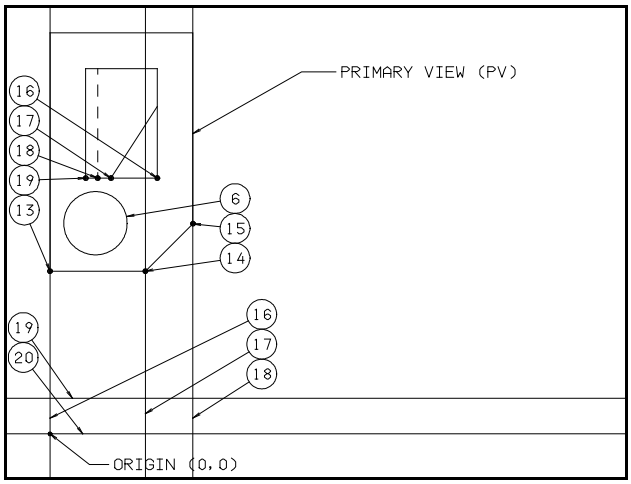

Select FKey LINE and submenu /HORZ/ and /UNLIM/. The menu prompt ***Key Y / Ind point / Sel element*** appears. Key in the number 1.5. Line #19 is created 1½" above the origin and the menu prompt ***Key Y / Ind Point / Sel element / YN erase-restore*** appears.

Key in the number 0. Line # 20 is created through the origin.

27. **Corner and relimit the lines forming the outline of the plate.**

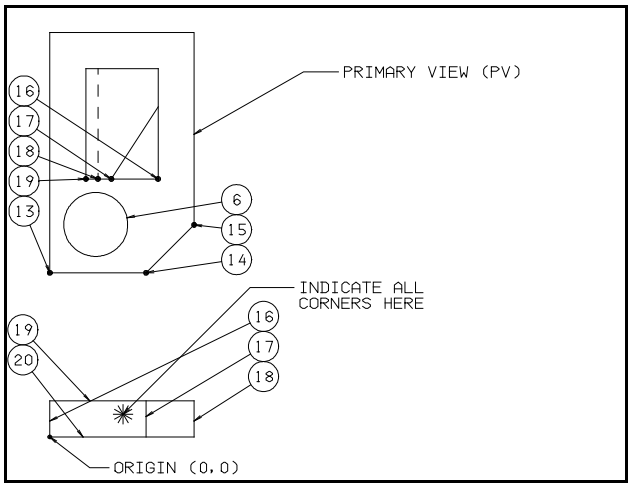

Select FKey CORNER. The menu prompt ***Sel element 1*** appears. Select line #16. The menu prompt ***Ind end saved / Sel element 2*** appears. Select line #19. The menu prompt ***Ind intersection / Sel pt, ln or menu / Key rad = 0.0000*** appears. Indicate inside the rectangle formed by lines 16, 18, 19 and 20 (as shown at the right). Lines #16 and #19 are cornered.

Repeat the process to corner the other 3 lines.

Select line #16 and line # 20 and indicate as shown.

Select line #20 and line #18 and indicate as shown.

Select Line #19 and line #18 and indicate as shown.

Now, to relimit line #17, select FKey RELIMIT. The menu prompt ***Sel element to modify*** appears. Select the bottom half of line #17. The menu prompt ***Sel intersecting element / Ind limit*** appears. Select line #20 as the intersecting element. The bottom half of line #17 is relimited to line #20 and the menu prompt ***Sel intersecting element / Ind limit / YN restore*** appears.

Select the top half of line #17. The menu prompt ***Sel intersecting element / Ind limit*** appears. Select line #19 as the intersecting element. The top half of line #17 is relimited to line #19. Use Y/N FLIP if the wrong end was relimited.

28. **Project the edges of the block from view PV into view FV.**

Select FKey AUXVIEW and submenu /2-VU/. (NOTE: View FV is still the active view because the words ***View FV*** appear near the top of the display screen). The menu prompt ***Sel point / circle*** appears. Select point #19 and line #21 is created.

Repeat this procedure to create the other lines:

Select point #18 and line #22 is created.

Select point #17 and line #23 is created.

Select point #16 and line #24 is created.

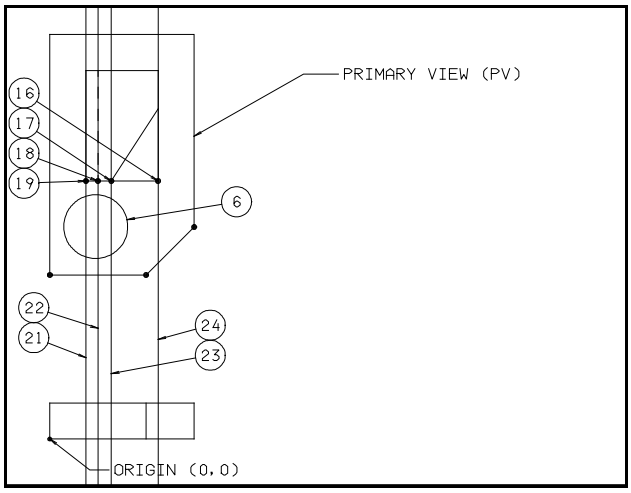

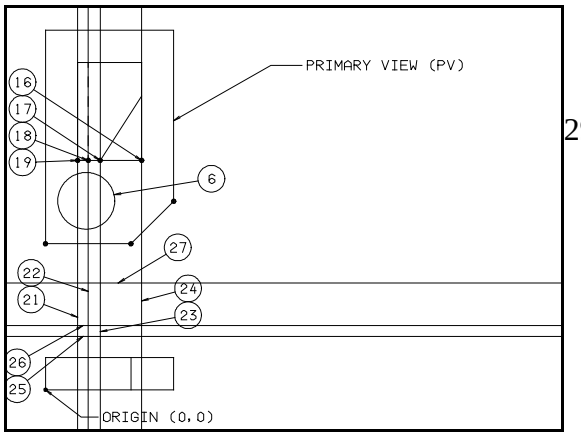

29. **Create horizontal lines defining the top of the block and the rectangular notch.**

Select FKey LINE and submenu /HORZ/ and /UNLIM/. The menu prompt ***Key Y / Ind point / Sel element*** appears. Key in 2.5 and line #25 is created (defines the bottom of the rectangular notch).

Key in 3 and line #26 is created (defines the top of the rectangular notch).

Key in 5 and line #27 is created (defines the top of the block).

30. **Corner the lines defining the top and sides of the block.**

Select FKey CORNER and the menu prompt ***Sel element 1*** appears.

Select line #27 and the menu prompt ***Ind end saved / Sel element 2*** appears. Select line #24. The menu prompt ***Ind intersect / Sel pt, lin or menu / Key rad = 0.00000*** appears. Indicate in the bottom left quadrant of the two lines (i.e. inside the block as shown in the figure at the right). Lines #27 and #24 are cornered.

Repeat this procedure for the other two lines. Select line #27 again and the menu prompt ***Ind end saved / Sel element 2*** appears. Select line #21. The menu prompt ***Ind intersect***

/ Sel pt, lin or menu / Key rad = 0.00000 appears. Indicate in the bottom right quadrant of the two lines (i.e. inside the block as shown in the figure at the right). Lines #27 and #21 are cornered. (NOTE: Use FKey WINDOW and submenu BOX to move in closer if needed)

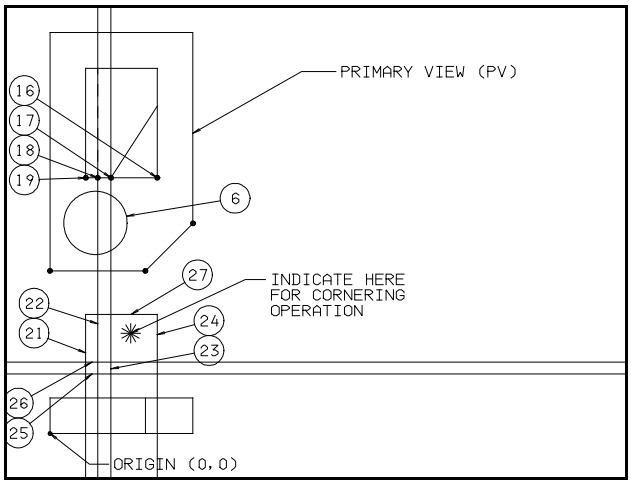

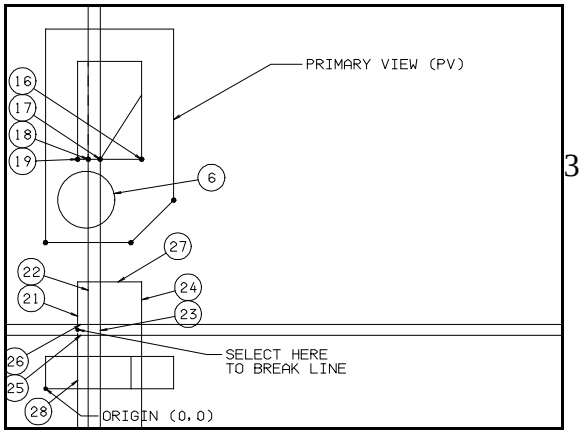

31. **Break line #21 into two separate lines (i.e. #21 & #28) to facilitate the construction of the rectangular slot.**

Select FKey RELIMIT and submenu /BREAK/. The menu prompt ***Sel element to modify*** appears. Select line #21 where it passes between lines #25 and #26 (Note that the line breaks at the position on the line where selected). Line #21 breaks where selected and a new line #28 is created. (Note: Do not press the select key more than once; the line is broken and a new line created each time the select key is pressed). (Use FKey WINDOW and submenu BOX for a better view.)

32. **Corner the lines forming the rectangular slot.**

Select FKey CORNER. The menu prompt ***Sel element 1*** appears. Select line #21. The menu prompt ***Ind end saved / Sel element 2*** appears. Select line #26. The menu prompt ***Ind intersect / Sel pt, ln or menu / Key rad = 0.0000*** appears. Indicate in the top right quadrant of lines #21 an #26 (i.e. indicate near position #I1). Lines #21 and #26 are cornered.

Repeat the procedure for the other lines.

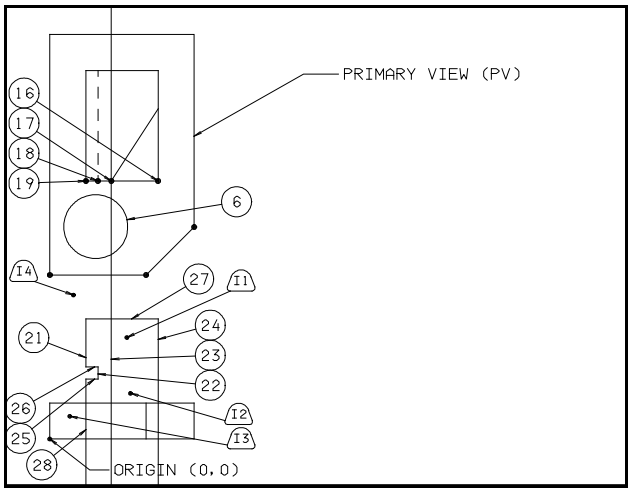

Select line #28 and line #25. Indicate in the bottom right quadrant (i.e. indicate near position #I2). Lines #28 and #25 are cornered.

Select line #26 and line #22. Indicate in the bottom left quadrant (i.e. indicate near position #I3). Lines #26 and #22 are cornered.

Select line #25 and line #22. Indicate in the top left quadrant (i.e. indicate near position #I4). Lines #25 and #22 are cornered.

33. **Relimit the lines defining the sides of the block to the top of the plate.**

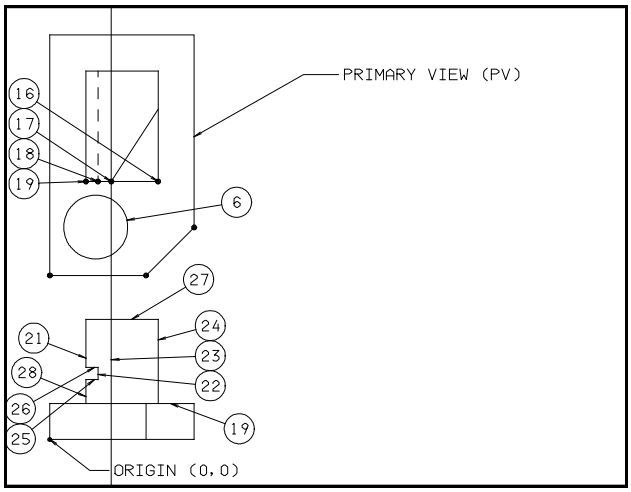

Select FKey RELIMIT. The menu prompt ***Sel element to modify***. Select the *bottom* half of line #24. The menu prompt ***Sel intersecting element / Ind limit / YN restore*** appears. Select line #19. Line #24 is relimited to line #19. The menu prompt ***Sel element to modify / YN flip*** appears. Should the wrong end of line #24 relimit, press the Y/N button on the mouse, and the line will flip (i.e. reverse the relimited ends).

Repeat this procedure for the other line. Select the bottom half of line #28. The menu prompt ***Sel intersecting element / Ind limit / YN restore*** appears. Select line #19. Line #28 is relimited to line #19.

34. **Draw the angled line defining the edge of the oblique plane.**

Select FKey POINT. The menu prompt ***Key X / Key X,Y / Ind point / Sel any element*** appears. Select line #27. The menu prompt ***Key Y / Sel any element / YN endpoints*** appears. Select line #23. Point #29 appears at the intersection of line #27 and line #23.

Repeat for the other point. Select line #24 and line #19. Point #30 appears at their intersection.

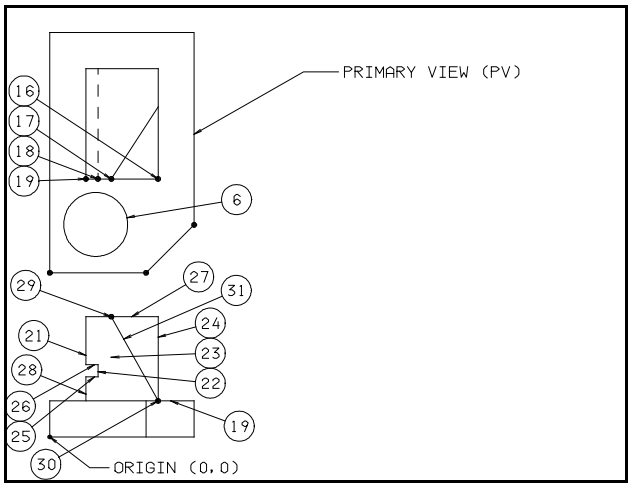

Create the line. Select FKey LINE and submenu /PT-PT/ and /LENGTH/. The menu prompt ***Key X,Y / Ind point / Sel element / YN chain mode*** appears. Select point #29 and then select point #30. Line #31 is created.

Erase the construction line. Line #23 is a construction line and may now be erased. Select FKey SHOW (submenu /ERASE/ is underlined by default). The menu prompt ***Sel any element*** appears. Select line #23. Line 23 is erased and disappears.

35. **Project the hole from view PV into view FV.**

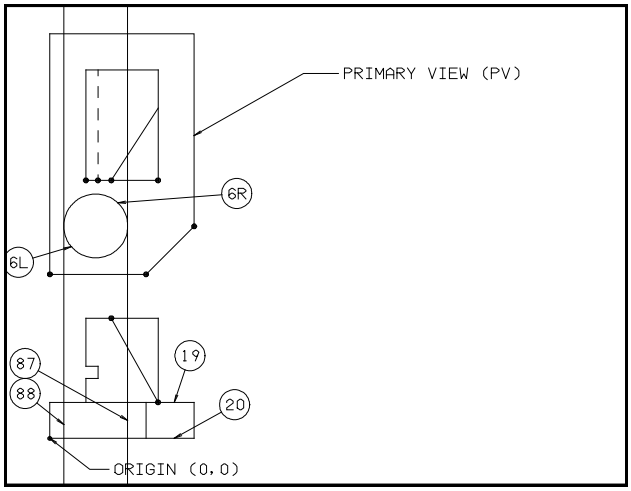

Select FKey AUXVIEW and submenu /2-VU/. The menu prompt ***Sel point / Sel circle*** appears. Select the circle in view PV at the locations 6R and 6L (i.e. the right and left side of the circle). Lines #87 and #88 are projected into view FV.

36. **Relimit lines to finish the front view.**

Select FKey RELIMIT. The menu prompt ***Sel element to modify*** appears. Select the top half of line #88. The menu prompt ***Sel intersecting element / Ind limit / YN restore*** appears. Select line #19. Line #88 is relimited to line #19 and the menu prompt ***Sel element to modify / YN flip*** appears.

Finish relimiting the other 3 ends of the lines.

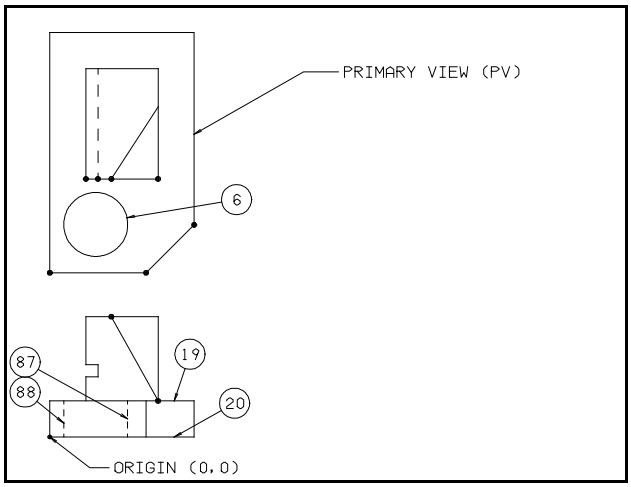

Select the bottom half of line #88. Select line #20. Line #88 is relimited to line 20.

Select the top half of line #87. Select line #19. Line #87 is relimited to line #19.

Select the bottom half of line #87. Select line #20. Line #87 s relimited to line #20.

Change the line type to dashed.

Select FKey TYPE and submenu /STYLE/ and /DASH/ (if necessary). The menu prompt ***Sel any element***. Select lines #87 and #88 and they are changed to dashed lines.

THE CONSTRUCTION OF THE FRONT VIEW IS NOW COMPLETED. File your drawing now.

F) START ANOTHER RELATED AUXILIARY VIEW (ORTHOGRAPHIC VIEW SV (SIDE VIEW)):

View FV (i.e. Front View) has been partially created by projecting information from View PV (i.e. Plan View). You will now create a side view (i.e. View SV) by projecting information from *both* View PV and View FV *into* View SV. Note that View FV must be the active view prior to starting this side view (i.e. you should see the words ***View FV*** near the top of the display screen).

37. Select Fkey AUXVIEW and submenu /START/. Submenu /ORTHO/ is underlined by default. (This is the option you want because you are starting an orthographic view). The menu prompt ***Sel line of sight / YN section line*** appears. (Note that the word ***View FV*** is displayed near the top of the display screen. View FV is the active auxiliary view).

38. The line of sight can be any line in view FV that determines the ***direction*** that you are looking when constructing the side view. You would normally select a horizontal line through the origin, since that is the direction that you are looking when creating view SV (Side View). Should you want to create an orthographic view in another direction you

will have to draw a line in that direction first. Note that you should select a line through the origin of the existing view since it is preferable to have the origins of the auxiliary views line up.

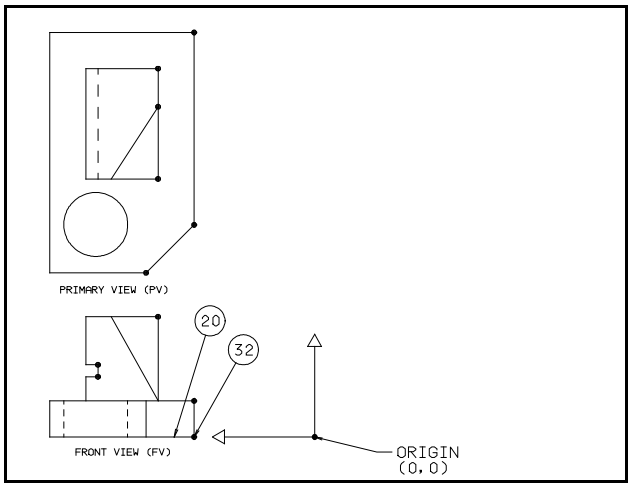

Select line #20 to determine the direction of sight. The menu prompt ***Sel point*** appears.

39. Select the point #32. (This point is used as a reference to determine which side the new orthographic view will be created on). The menu prompt ***Ind axis*** appears.

40. Indicate to the right of point #32. The indicated location will become the origin of View FV. (The Y axis of the new view will point from this indicated location back towards the selected point (point #32 in this case)). The menu prompt ***Key scale = 0.375*** appears.

41. Press the Y/N button on the mouse to accept the auxiliary view scale. (Notice that this is the same scale as view PV). The menu prompt ***Key ID*** now appears.

42. Key SV (i.e. Side View) as the view ID. (You may key any two character designation for the auxiliary view name).

43. The origin now appears and the orthographic auxiliary view SV is created. (Note that the word *View SV* is now displayed near the top of the display screen). Notice that the Y axis points back towards view FV and appears horizontal, and the X axis points upwards and appears vertical. The menu prompt ***YN remove axis block*** appears near the top of the display screen.

44. Press the Y/N button on the mouse to remove the axis block. The axis block disappears.

45. Place a point at the origin of the new auxiliary view SV. Select FKey POINT and press the enter key twice. A point appears at the origin of view SV.

G) CONSTRUCT GEOMETRY IN THE THIRD ORTHOGRAPHIC VIEW (VIEW SV):

View SV is constructed by projecting lines *from* points and circles in views PV and FV *into* View SV.

46. **Create all necessary points in views PV and FV (if they are not already there).** Since information is projected between two views by selecting points or circles, make View PV active and create points #37 - #42. Then make View FV active and create points #32 - #36.

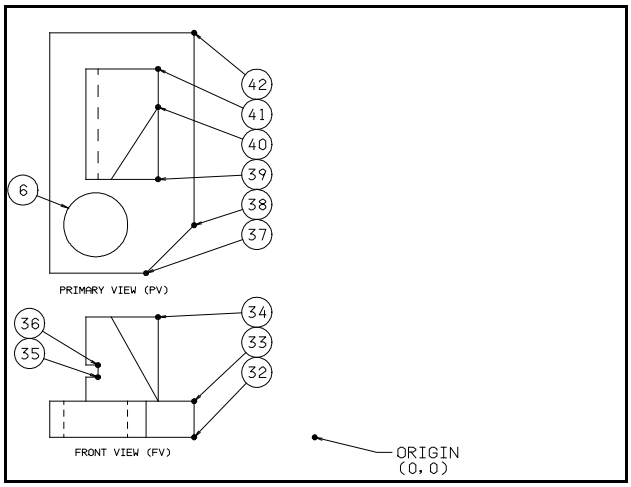

To make the view active select FKey AUXVIEW and submenu /CHOOSE/. Select any element in the view you want to be active, and that view will become active.

To create points at the ends of lines, select FKey POINT and submenu /DEF PTS/. Select any line in the active view and points will appear at the line ends.

47. **Project information *from* view PV and view FV *into* view SV.**

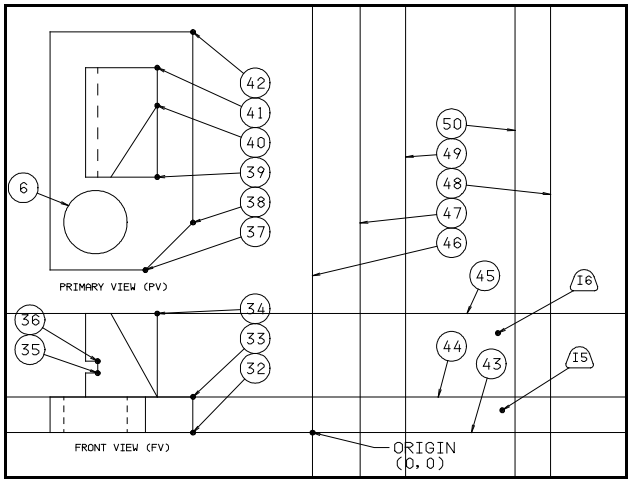

Before starting, make sure that view SV is the active view. Look at the top of the screen. If the words ***View SV*** appear there then view SV is active. If they do not, then select FKey AUXVIEW and submenu /CHOOSE/. Select the origin point in view SV and view SV will become the active view. (NOTE: the message ***View SV*** should now appear near the top of the display screen).

Select FKey AUXVIEW (if necessary) and submenu /2-VU/. The menu prompt ***Sel point / Sel circle*** appears.

Select point #37 in view PV. Line #46 is created and the menu prompt ***Sel point / Sel circle / YN erase-restore*** appears.

Select the following points in view PV. Selecting point #38 in view PV creates line #47 in view SV. Selecting point #42 in view PV creates line #48 in view SV. Selecting point #39 in view PV creates line #49 in view SV. Selecting point #41 in view PV creates line #50 in view SV.

Select point #32 in view FV. Line #43 is created and the menu prompt ***Sel point / Sel circle / YN erase-restore*** appears.

Select the following points in view FV. Selecting point #33 in view FV creates line #44 in view SV. Selecting point #34 in view FV creates line #45 in view SV.

48. **Corner the construction lines defining the plate.** Select FKey CORNER. The menu prompt ***Sel element 1*** appears. Select line #46 in view SV. The menu prompt ***Ind end saved / Sel element 2*** appears. Select line #43 in view SV. The menu prompt ***Ind intersect / Sel pt, ln or menu / Key rad = 0.0000*** appears. Indicate near position I5. Lines #46 and #43 are cornered (creating the bottom left corner of the plate).

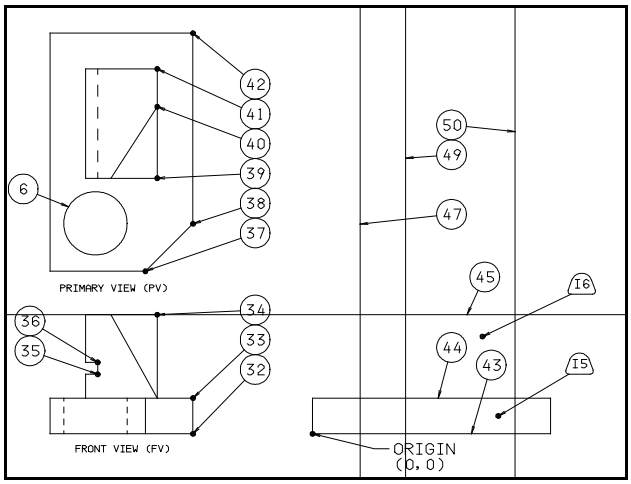

Corner the other lines as follows:

Select line #46 and line #44 and indicate near position I5.
Select line #44 and line #48 and indicate near position I5.
Select line #43 and line #48 and indicate near position I5.

The outline of the bottom of the plate is finished.

49. **Corner the construction lines defining the block.** The menu prompt ***Sel element 1 / YN erase*** is displayed from the previous operation. Select line #45 in view SV. The menu prompt ***Ind end saved / Sel element 2*** appears. Select line #49 in view SV. The menu prompt ***Ind intersect / Sel pt, ln or menu / Key rad = 0.0000*** appears. Indicate near position I6. Lines #45 and #49 are cornered (creating the top left corner of the block).

Corner the other lines as follows:

Select line #45 and line #50 and indicate near position I6.

The outline of the top of the block is finished.

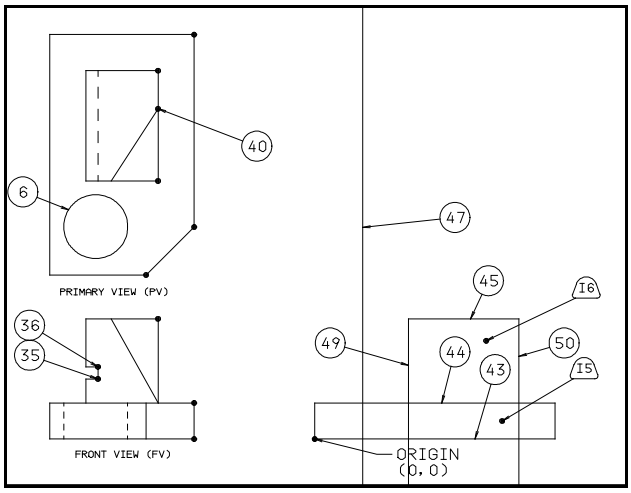

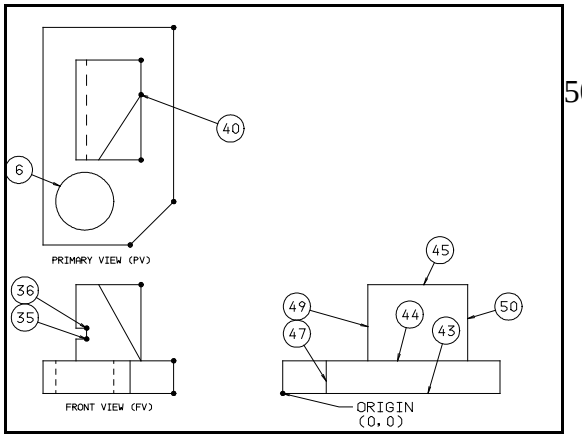

50. **Relimit lines to complete this portion of the object.**

Select FKey RELIMIT. The menu prompt ***Sel element to modify*** appears. Select the *bottom* half of line #47. The menu prompt ***Sel intersecting element / Ind limit / YN restore*** appears. Select line #43. The bottom half of line #47 is relimited to line #43.

Relimit the other lines as follows:

Select the bottom half of line #49, and then select line #44.
Select the bottom half of line #50, and then select line #44.
Select the **top** half of line #47, and then select line #44.

The view now appears as shown on the right.

51. **Project the remaining information from views PV and FV into View SV.** Select FKey AUXVIEW (if necessary) and submenu /2-VU/. The menu prompt ***Sel point / Sel circle*** appears.

Select point #40 in view PV. Line #53 is created and the menu prompt ***Sel point / Sel circle / YN erase-restore*** appears.

Select the following points in view FV. Selecting point #35 in view FV creates line #55

in view SV. Selecting point #36 in view PV creates line #54 in view SV.

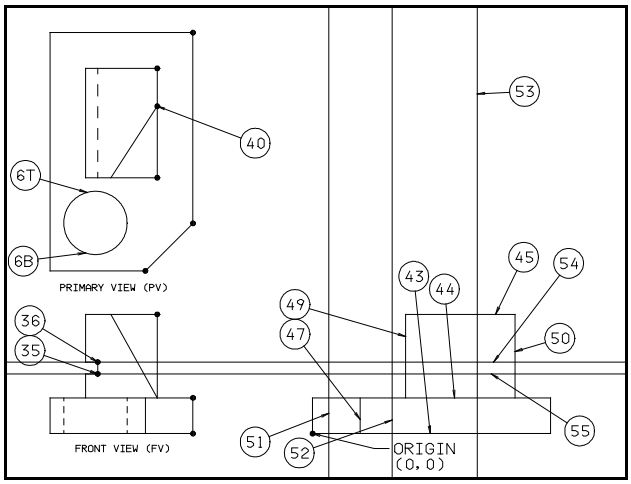

Select the top half of the circle in View PV (i.e. at location #6T) and line #52 is projected into View SV.

Select the bottom half of the circle in View PV (i.e. at location #6B) and line #51 is projected into View SV.

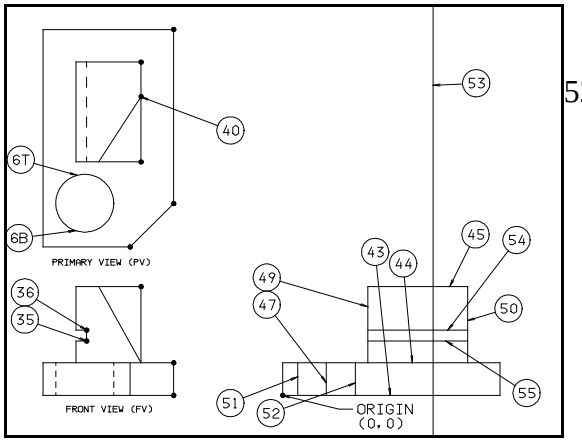

52. **Relimit the construction lines in View SV.** Select FKey RELIMIT. The menu prompt ***Sel element to modify*** appears. Select the *bottom* half of line #51. The menu prompt ***Sel intersecting element / Ind limit / YN restore*** appears. Select line #43. The bottom half of line #51 is relimited to line #43.

Relimit the other lines as follows:

Select the bottom half of line #52, and then select line #43.
Select the top half of line #51, and then select line #44.
Select the top half of line #52, and then select line #44.
Select the left half of line #54, and then select line #49.
Select the right half of line #54, and then select line #50.
Select the left half of line #55, and then select line #49.
Select the right half of line #55, and then select line #50.

The object now appears as shown above and to the right.

53. **Change the hidden lines to a dashed line style.**

Select FKey TYPE and submenu STYLE (Note: if you were recently in submenu COLOR you will have to select submenu /RTN/ to *climb up* one level in the menu structure). Select submenu /DASH/ and /M/ (if necessary). The menu prompt ***Sel any element*** appears. Select line #51, #52, #54 and #55. The lines change their style from

solid and medium weight to dashed and medium weight.

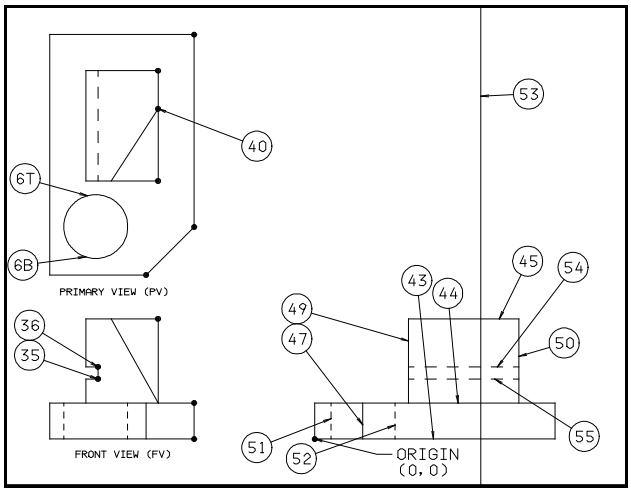

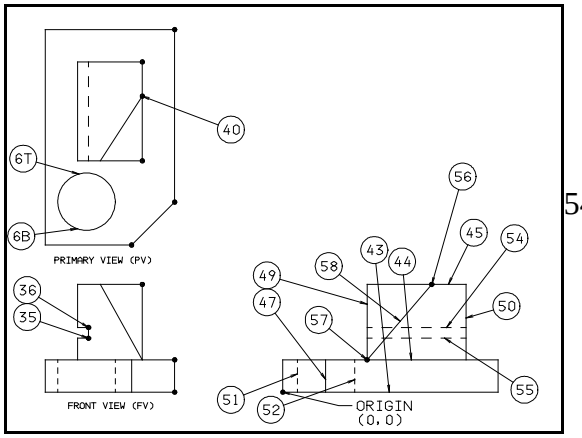

54. **Draw the angled line defining the edge of the oblique plane.**

Select FKey POINT. The menu prompt ***Key X / Key X,Y / Ind point / Sel any element*** appears. Select line #53. The menu prompt ***Key Y / Sel any element / YN endpoints*** appears. Select line #45. Point #56 appears at the intersection of line #53 and line #45.

Repeat for the other point. Select line #49 and line #44. Point #57 appears at their intersection.

Create the line. Select FKey LINE and submenu /PT-PT/ and /LENGTH/. The menu prompt ***Key X,Y / Ind point / Sel element / YN chain mode*** appears. Select point #56 and then select point #57. Line #58 is created.

Erase the construction line. Line #53 is a construction line and may now be erased. Select FKey SHOW (submenu /ERASE/ is underlined by default). The menu prompt ***Sel any element*** appears. Select line #58. Line #58 is erased and disappears.

55. **Let's take a look at the completed drawing!**

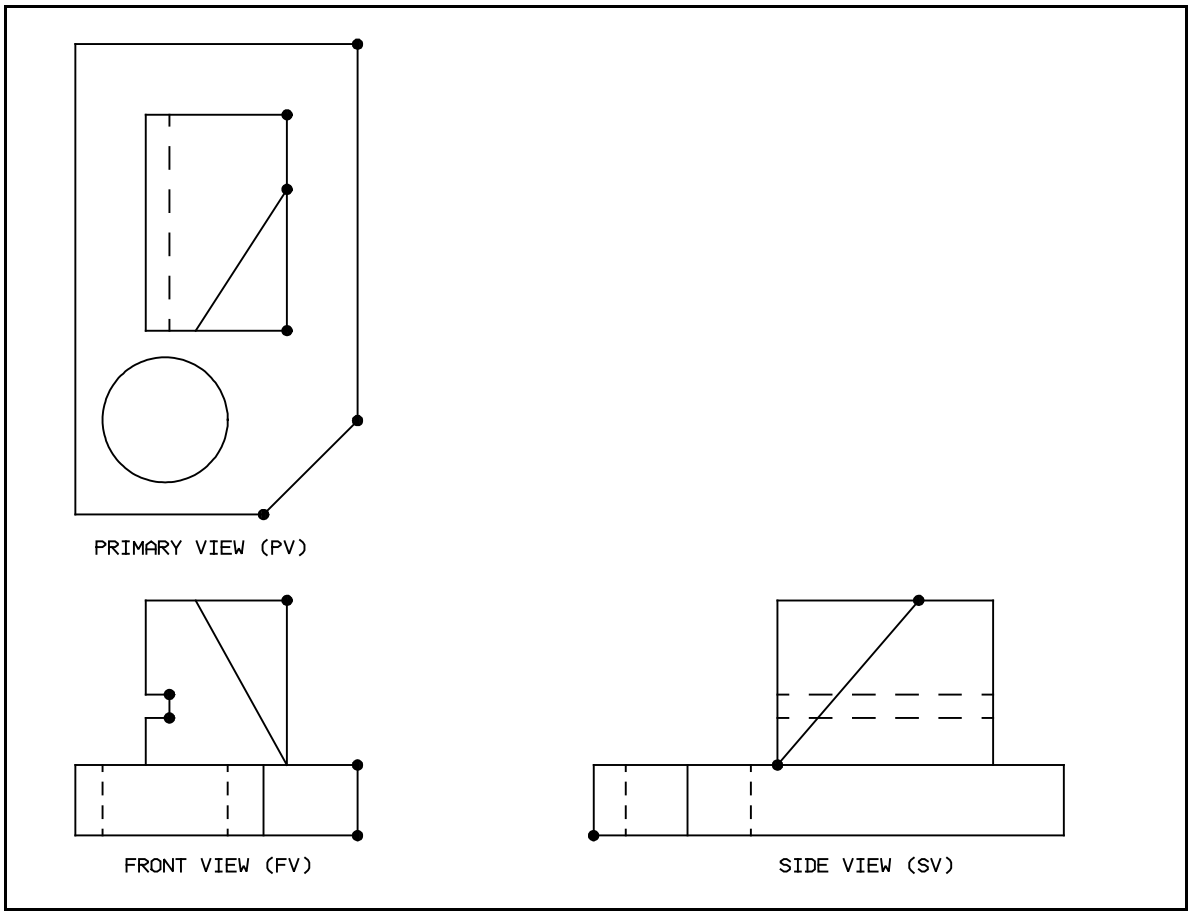

THE CONSTRUCTION OF THE SIDE VIEW IS NOW COMPLETED!

File your drawing now as you will use it in the next section.

FKey AUXVIEW

SUBMENU /START/ /TRUE/

TRUE VIEW CONCEPTS (FKEY AUXVIEW /START/ /TRUE/):

There are many cases where objects have angled planes that cannot be seen in a true relationship with any of the 6 standard orthogonal auxiliary views. In order to see the true length of geometry appearing on an angled plane it is necessary to create a true view (i.e. a view looking normal to the angled plane).

MICRO CADAM can create true views in two different ways:

- Create a true view from 3 points in 3D space (see page 25-36)
- Create a true view from 2 true length lines (see page 25-45)

CREATING A TRUE VIEW FROM 3 POINTS IN 3D SPACE:

To create a true view from 3 points in 3D space, follow these steps:

NOTE: It is assumed that the three orthographic views, PV, FV and SV have been completed prior to beginning this procedure. **If you do not have these views ready, change to CAD,TRAIN and call the drawing "AUXVIEW EXAMPLE ,3" to use for this exercise.** Reference Figure 45 and Figure 46 on pages 37 and 38 as you read through the following steps.

A) PREPARE TO CONSTRUCT THE TRUE VIEW:

1. Look at the existing orthographic views (a minimum of two) and decide which plane you want to create the true view on. On Figure 45 and Figure 46 you have determined that you want to create a true view of the plane defined by pts O, X and Y.

2. Find two lines that are located on the plane on which you want to create the true view, and that are coincident to the same point. The two lines are line 1 and line 2. The point that the two lines are coincident to would be point ’O’.

3. The intersection of these two lines is known as the origin of the true view (This is point ’O’). Line 1 defines the X axis and line 2 defines the Y axis. The X axis line and the Y axis line are not necessarily at 90 degrees to each other.

4. Check the primary view (PV) and the front view (FV) to make sure that points are located at positions O, X and Y in each view. If the points are not there, make the view active and create points where necessary.

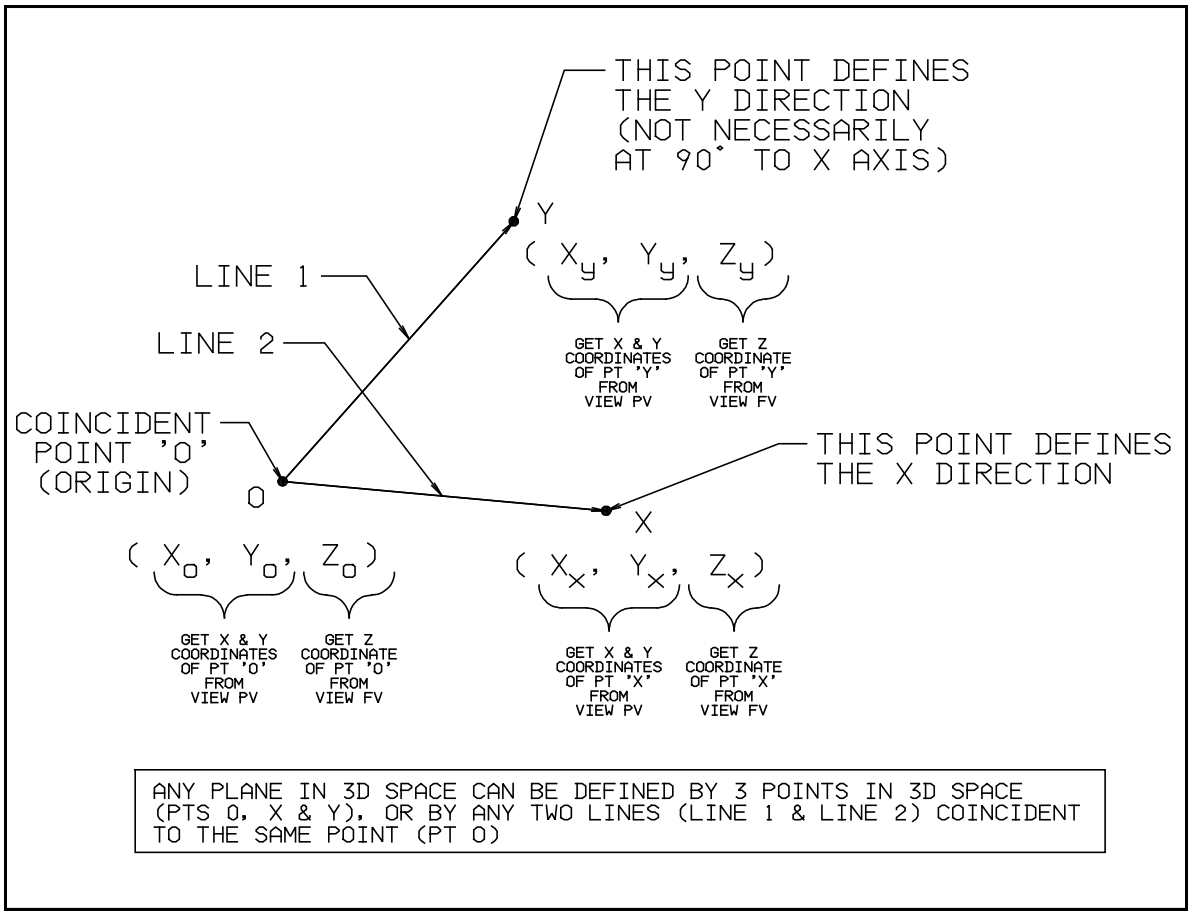

Figure 45 Line and point definitions for creating a true view.

5. Make auxiliary view PV active. (use FKey AUXVIEW and submenu /CHOOSE/ and select any element in view PV). **AUXILIARY VIEW PV MUST BE YOUR ACTIVE VIEW WHEN YOU START A TRUE VIEW OR AN ISOMETRIC VIEW!**

B) START THE TRUE VIEW:

6. Select FKey AUXVIEW (if necessary) and select submenu /START/.

7. The submenu ***/ ORTHO / TRUE / ISO / RETURN /*** is displayed near the bottom of the screen. Select submenu ***/ TRUE /*** to begin the process of creating a true view.

8. The menu prompt ***Def origin / Sel TL line 1*** will appear near the top of the display

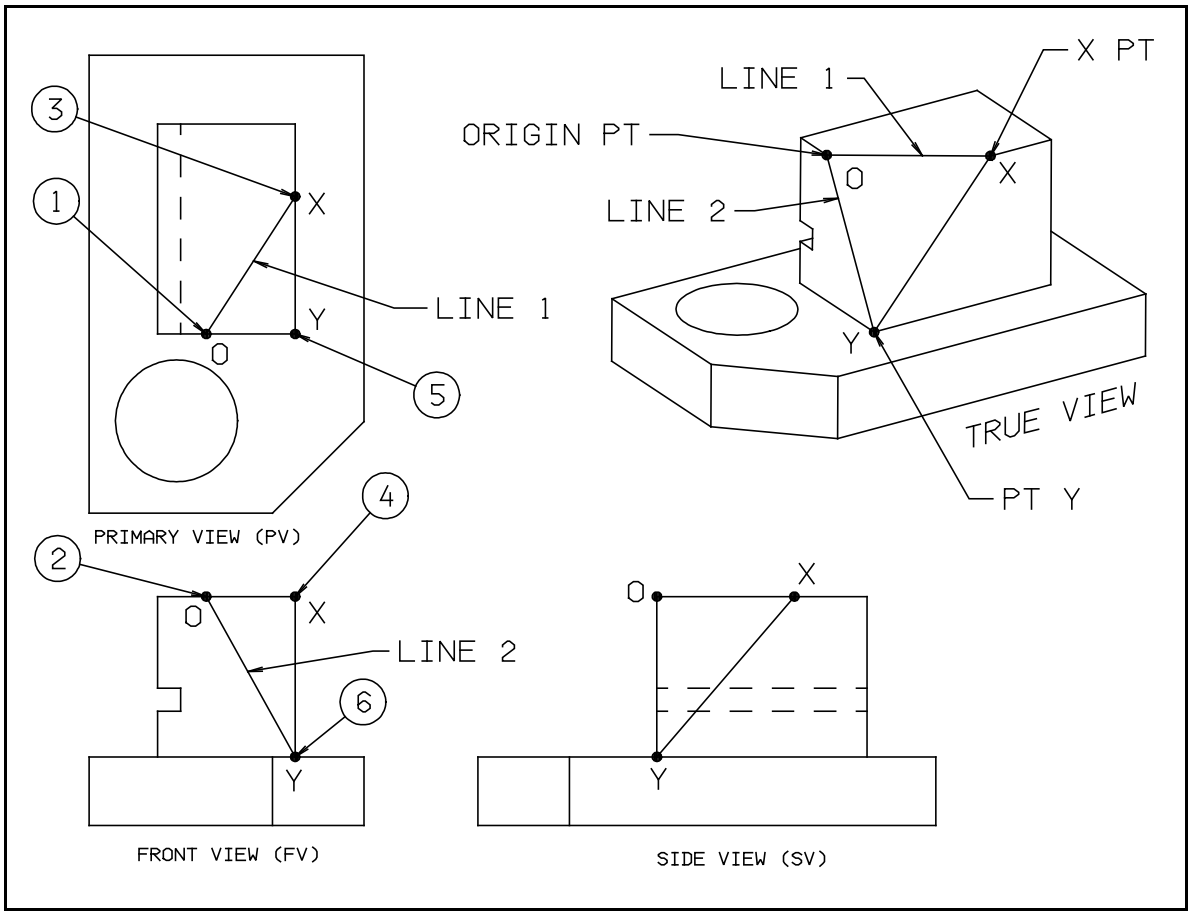

Figure 46 The definition points for creation of a true view.

screen. MICRO CADAM asking for the X and Y coordinates of the definition point for the origin of the true view. Select pt 'O' in **plan view** (PV). (NOTE: This is point #1 in Figure 46 on page 25-38.) This *captures* the X and Y coordinates of the origin point. Note that view PV provides all the X and Y coordinates for the true view definition points.

9. The menu prompt ***Key Z = 0.0000 / Sel edge line or point*** will appear near the top of the display screen. MICRO CADAM is asking for the elevation of the origin point (i.e. its Z coordinate). Select the 'O' point in the **front view** (FV). (NOTE: This is point #2 in Figure 46 on page 25-38.) This *captures* the Z coordinate of the origin point. Note that view FV provides all the Z coordinates for the true view definition points.

10. The menu prompt ***Def point for X-direction*** will appear near the top of the display

screen. MICRO CADAM asking for the X and Y coordinates of the definition point for the X point of the true view. Select pt 'X' in **plan view** (PV). (NOTE: This is point #3 in Figure 46 on page 25-38.) This *captures* the X and Y coordinates of the X point. Note that view PV provides all the X and Y coordinates for the true view definition points.

11. The menu prompt ***Key Z = 5.0000 / Sel edge line or point*** will appear near the top of the display screen. (NOTE: The actual value for Z will vary depending on where the previous selection was made). MICRO CADAM is asking for the elevation of the X point (i.e. its Z coordinate). Select the 'X' point in the **front view** (FV). (NOTE: This is point #4 in Figure 46 on page 25-38.) This *captures* the Z coordinate of the X point. Note that view FV provides all the Z coordinates for the true view definition points.

12. The menu prompt ***Def point for Y-direction*** will appear near the top of the display screen. MICRO CADAM asking for the X and Y coordinates of the definition point for the Y point of the true view. Select pt 'Y' in **plan view** (PV). (NOTE: This is point #5 in Figure 46 on page 25-38.) This *captures* the X and Y coordinates of the Y point. Note that view PV provides all the X and Y coordinates for the true view definition points.

13. The menu prompt ***Key Z = 5.0000 / Sel edge line or point*** will appear near the top of the display screen. (NOTE: The actual value for Z will vary depending on where the previous selection was made). MICRO CADAM is asking for the elevation of the Y point (i.e. its Z coordinate). Select the 'Y' point in the **front view** (FV). (NOTE: This is point #6 in Figure 46 on page 25-38.) This *captures* the Z coordinate of the Y point. Note that view FV provides all the Z coordinates for the true view definition points.

14. The menu prompt ***Def location*** will appear near the top of the display screen. MICRO CADAM is asking approximately where you want it to begin constructing the true view. Indicate on your drawing where you want the origin of the view to be located.

15. The menu prompt ***Key scale = 1.000*** will appear near the top of the display screen. MICRO CADAM is asking for the scale at which you want the true view drawn. Remember that this scale determines the size of the picture...all geometry is drawn full size in this view. Key in a scale of .375 (i.e. enter .375 on the keyboard and press the enter key), or key any scale that you want.

16. The menu prompt ***Key ID*** will appear near the top of the display screen. Key in the ID ***TR*** (for True View).

17. The true view is now started. The origin axis appears at the location indicated for the

start of the view. Notice that the axes are turned at an angle. This has no relevance to the actual construction of the true view. You can rotate the view to different orientation should you want to later on.

C) CONSTRUCT THE TRUE VIEW:

18. The figure at the right shows the true view as it would exist just after finishing the previous step. The menu prompt ***YN remove axis block*** will now appear near the top of the display screen. Press the YN button on the mouse to remove the axis block.

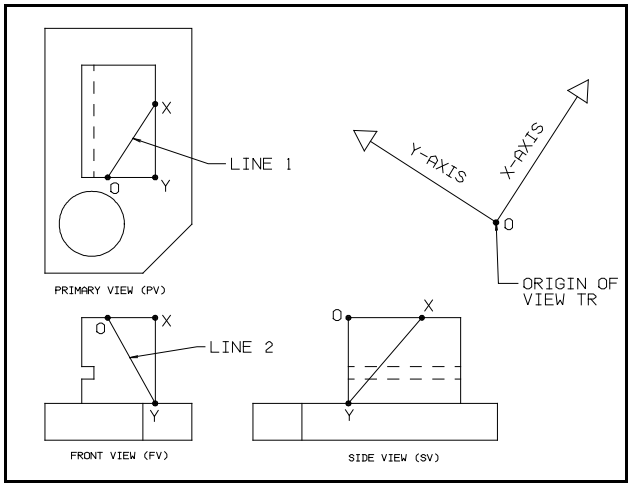

19. Place a point at the origin of the true view. In MICRO CADAM this is always a good idea since there are many cases where you would need to access the origin point of the view. To place the point at the origin, press FKey POINT, and then press the enter key (on your keyboard) twice. You have just created a point at the origin.

20. Project the first line into the true view. Follow the steps shown in the figure at the right. Note that view TR must be the active view. This is necessary because you are creating geometry *into* view TR.

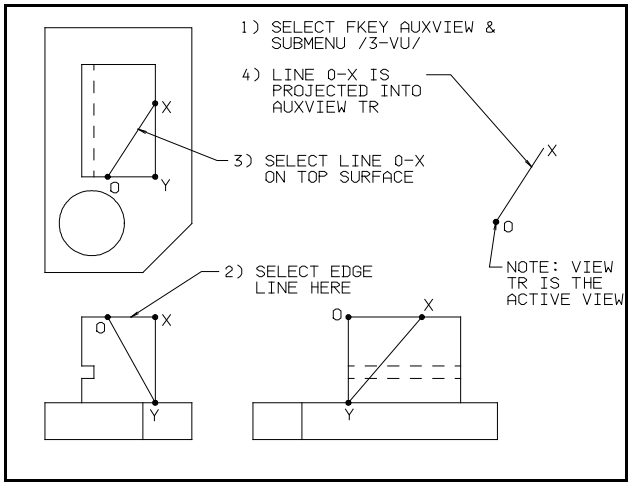

Select FKey AUXVIEW (if it is not already active), then select the submenu option /3-VU/. The /3-VU/ option means that you are working *between* 3 views. In this situation you will be selecting geometry *from* views PV and FV and projecting it *into* view TR. Follow the steps labelled 1 - 4 on the diagram at the right and line O-X will be projected into view TR.

21. Project the second line into the true view. Follow the steps in the figure at the right. Note that everytime you select submenu /3-VU/ you are resetting the projection process in preparation for selecting another edge line.

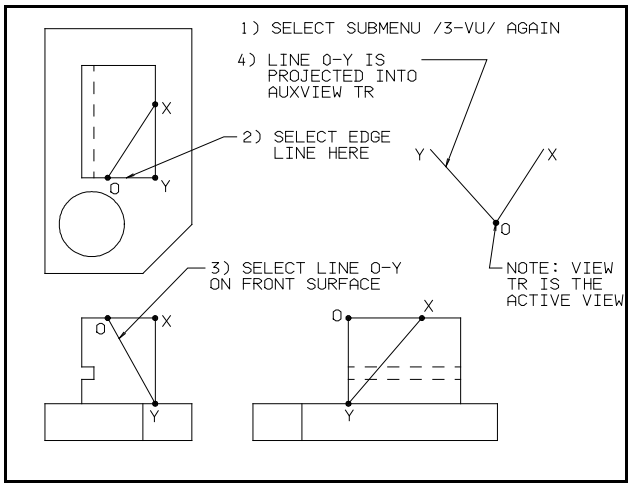

22. Project the third line into the true view. Follow the steps in the figure at the right. The true view has now been created. The triangle O,X,Y is a view looking normal (i.e. true) onto the plane formed by the points O, X and Y. Normally, the view would now be finished. Let's project the remaining lines into the true view to see how the entire object is rotated in the true view. **THESE ADDITIONAL LINES ARE NOT TRUE LENGTH LINES.**

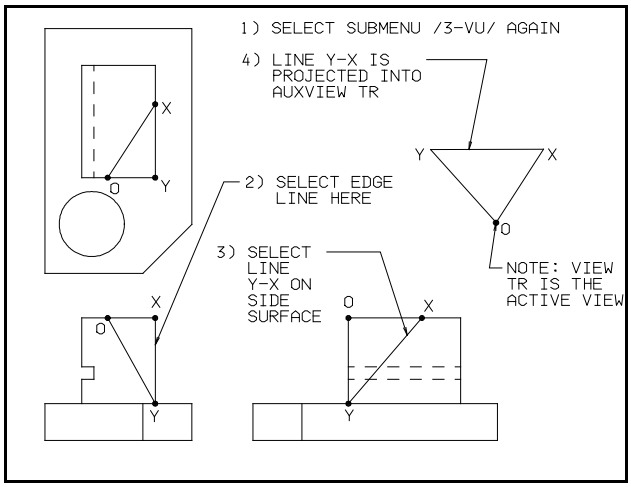

23. Project lines from the front view of the block into the true view to help us visualize the orientation of the object. Follow the instructions in the figure at the right.

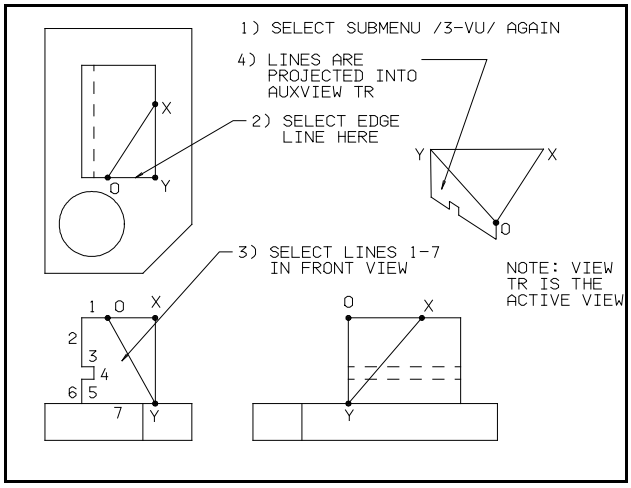

24. Project lines from the side view of the block to help us visualize the orientation of the object. Follow the instructions in the figure at the right. Relimit lines as required.

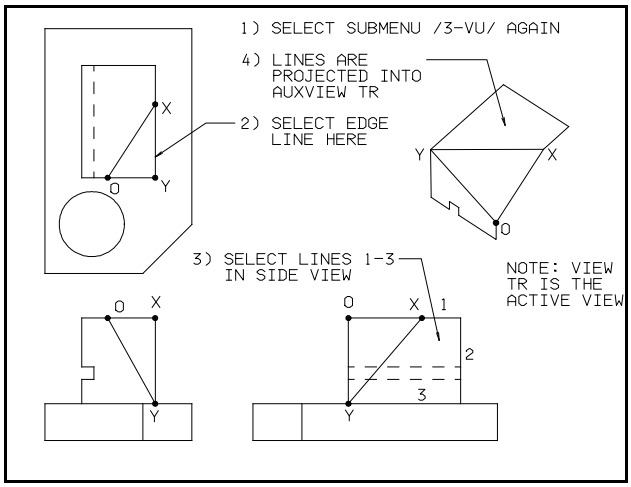

25. Project lines from the top of the block to help us visualize the orientation of the object. Follow the instructions in the figure at the right. Relimit lines as required.

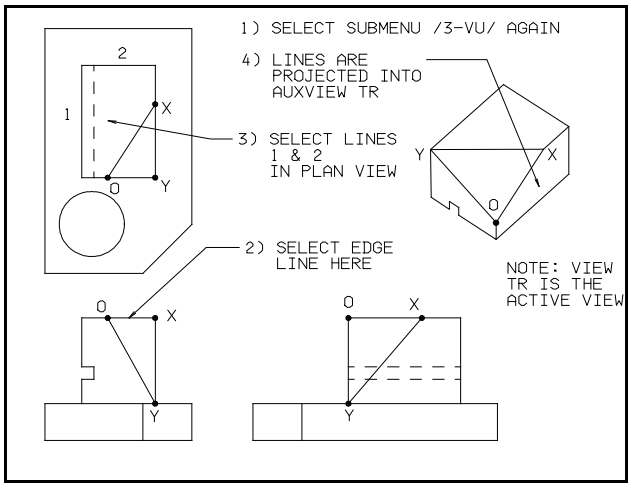

26. Project the line from the slot in the block to help us in visualizing the orientation of the object. Follow the instructions in the figure at the right. Relimit lines as required.

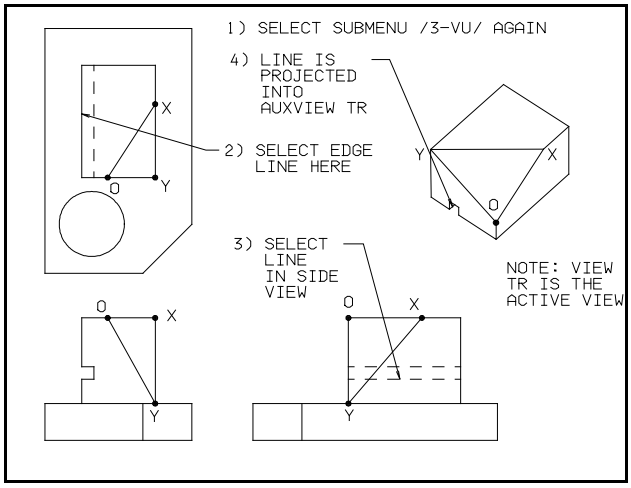

27. Project lines that are on the top surface of the plate, to help us in visualizing the orientation of the object. Follow the instructions in the figure at the right. After you have projected the lines, access FKey RELIMIT and relimit any lines that would be hidden. Then return to FKey AUXVIEW and continue.

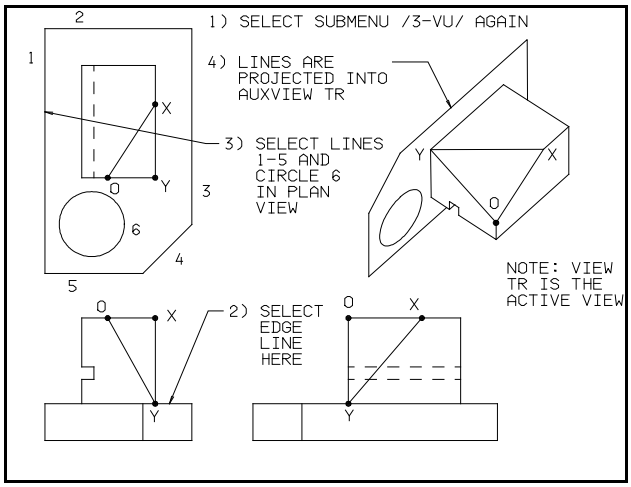

28. Project lines that are on the bottom surface of the plate, to help us in visualizing the orientation of the object. Follow the instructions in the figure at the right. After you have projected the lines, access FKey RELIMIT and FKey SHOW and relimit or erase any lines that would be hidden. Then return to FKey AUXVIEW and continue.

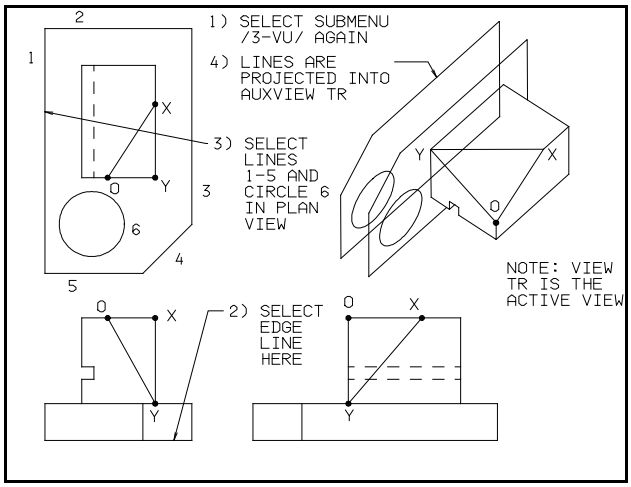

29. Project lines that are on the front edge of the plate, to help us in visualizing the orientation of the object. Follow the instructions in the figure at the right.

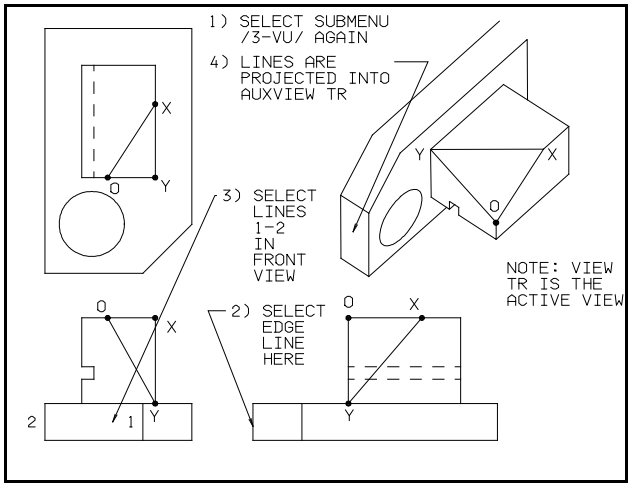

30. Project lines that are on the side edge of the plate, to help us in visualizing the orientation of the object. Follow the instructions in the figure at the right.

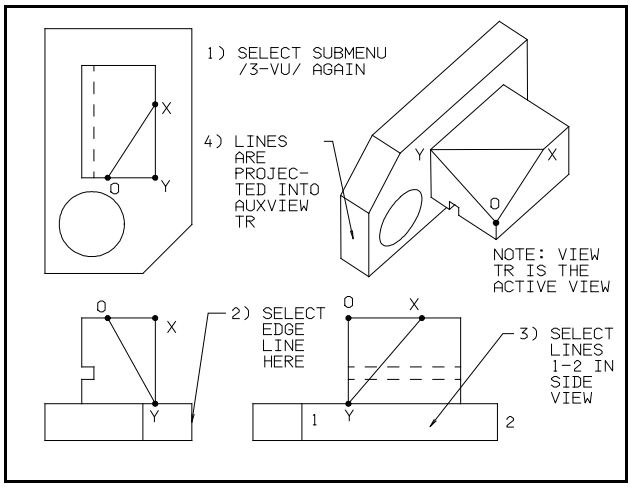

The construction of the complete object in the true view is now complete. Notice that the entire object is rotated such that the plane O,X,Y is positioned normal to you. The lines O-Y, O-X and X-Y are true length lines.

It is not necessary to project the entire object into the true view. We have done so here so you may understand how the complete object is rotated anytime you create a true view.

Note that the projection techniques used here to project the object into the true view are identical for isometric and axonometric views. Orthographic views also use these /3-VU/ projection techniques as well as /2-VU/ techniques.

/2-VU/ projections may also be used in the creation of all types of auxiliary views.

File your drawing with a different name.

CREATING A TRUE VIEW FROM 2 TRUE LENGTH LINES:

To create a true view from 2 true length lines, follow these steps:

NOTE: It is assumed that the three orthographic views, PV, FV and SV have been completed prior to beginning this procedure. **If you do not have these views ready, change to CAD,TRAIN and call the drawing "AUXVIEW EXAMPLE ,3" to use for this exercise.** Reference Figure 45 and Figure 59 on pages 37 and 46 as you read through the following steps.

A) PREPARE TO CONSTRUCT THE TRUE VIEW:

1. Look at the existing orthographic views (a minimum of two) and decide which plane you want to create the true view on. On Figure 45 and Figure 59 you have determined that you want to create a true view of the plane defined by line 1 and line 2.

2. Find two true length lines that are located on the plane on which you want to create the true view, and that are coincident to the same point. (NOTE: True length lines area lines which are shown at their true length in one of the auxiliary views). The two lines are line 1 and line 2. The point that the two lines are coincident to would be point 'O'.

3. The intersection of these two lines is known as the origin of the true view (This is point 'O'). Line 1 defines the X axis and line 2 defines the Y axis. The X axis line and the Y axis line are not necessarily at 90 degrees to each other.

4. Make auxiliary view PV active. (use FKey AUXVIEW and submenu /CHOOSE/ and select any element in view PV). **AUXILIARY VIEW PV MUST BE YOUR ACTIVE VIEW WHEN YOU START A TRUE VIEW OR AN ISOMETRIC VIEW!**

B) START THE TRUE VIEW:

5. Select FKey AUXVIEW (if necessary) and select submenu /START/.

6. The submenu ***/ ORTHO / TRUE / ISO / RETURN /*** is displayed near the bottom of the screen. Select submenu ***/ TRUE /*** to begin the process of creating a true view.

7. The menu prompt ***Def origin / Sel TL line 1*** will appear near the top of the display screen. MICRO CADAM asking you to select the first true length (TL) line. Select line 1 in **plan view** (PV). Select the line identified with balloon #1.

8. The menu prompt ***Key Z = 0.0000 / Sel edge line or point*** will appear near the top of the

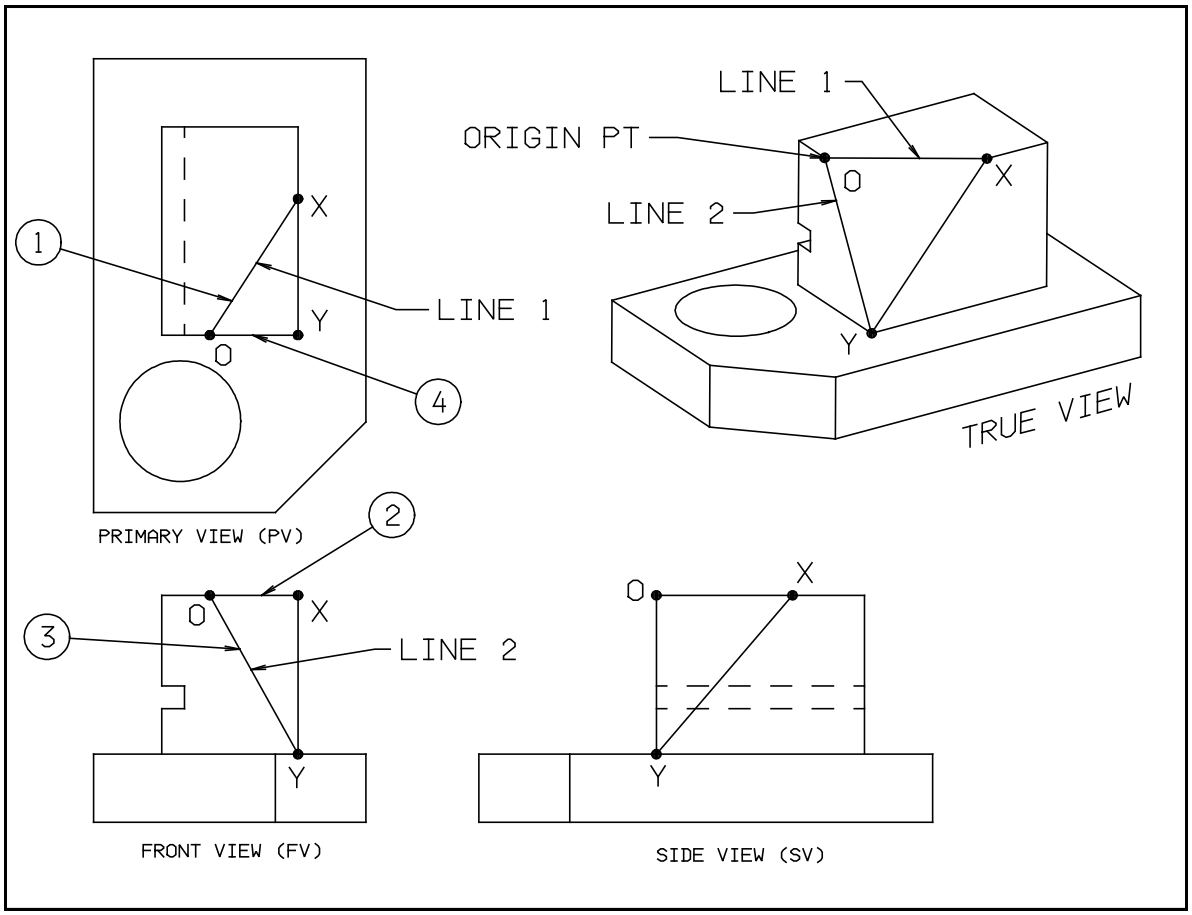

Figure 59 True length lines for creation of a true view.

display screen. MICRO CADAM is asking you to select a line that identifies the plane that the first true length line is located on. Select the line identified by balloon #2 in the **front view** (FV).

9. The menu prompt ***Sel TL line 2 / YN X-axis*** will appear near the top of the display screen. MICRO CADAM asking you to select the second true length (TL) line. Select line 2 in **plan view** (FV). Select the line identified with balloon #3.

10. The menu prompt ***Key Z = 5.0000 / Sel edge line or point*** will appear near the top of the display screen. (NOTE: The actual value for Z will vary depending on where the previous selection was made). MICRO CADAM is asking you to select a line that identifies the plane that the second true length line is located on. Select the line identified by balloon #4 in the **plan view** (PV).

11. The menu prompt ***Def location*** will appear near the top of the display screen. MICRO CADAM is asking approximately where you want it to begin constructing the true view. Indicate on your drawing where you want the origin of the view to be located.

12. The menu prompt ***Key scale = 1.000*** will appear near the top of the display screen. MICRO CADAM is asking for the scale at which you want the true view drawn. Remember that this scale determines the size of the picture...all geometry is drawn full size in this view. Key in a scale of .375 (i.e. enter .375 on the keyboard and press the enter key), or key any scale that you want.

13. The menu prompt ***Key ID*** will appear near the top of the display screen. Key in the ID ***TR*** (for True View). If the ID ***TR*** is in use, key in another 2 character identity.

14. The true view is now started. The origin axis appears at the location indicated for the start of the view. Notice that the axes are turned at an angle. This has no relevance to the actual construction of the true view. You can rotate the view to different orientation should you want to later on.

C) CONSTRUCT THE TRUE VIEW:

All the steps required from this point on are identical to those for the true view created using 3 points. Please read from page 25-40 to page 25-44 and follow the steps there.

FKey AUXVIEW

SUBMENU /START/ /ISO/

ISOMETRIC VIEW CONCEPTS (FKEY AUXVIEW /START/ /ISO/):

FKey AUXVIEW and submenu /START/ and /ISO/ allow you to create either axonometric views or isometric views.

An axonometric view shows the three faces of an object projected onto a plane. Axonometric views are created by rotating the object at any angle about the X, Y and Z axes in 3D space. When determining the direction of rotation of the object about the axes, use the right hand rule. Imagine that you are holding the axis in your right hand with your thumb pointing in the same direction as the axis arrow. The direction your fingers are pointing is the direction for positive rotation about that axis.

Examples of axonometric views are shown in Figure 60 on page 25-50 below.

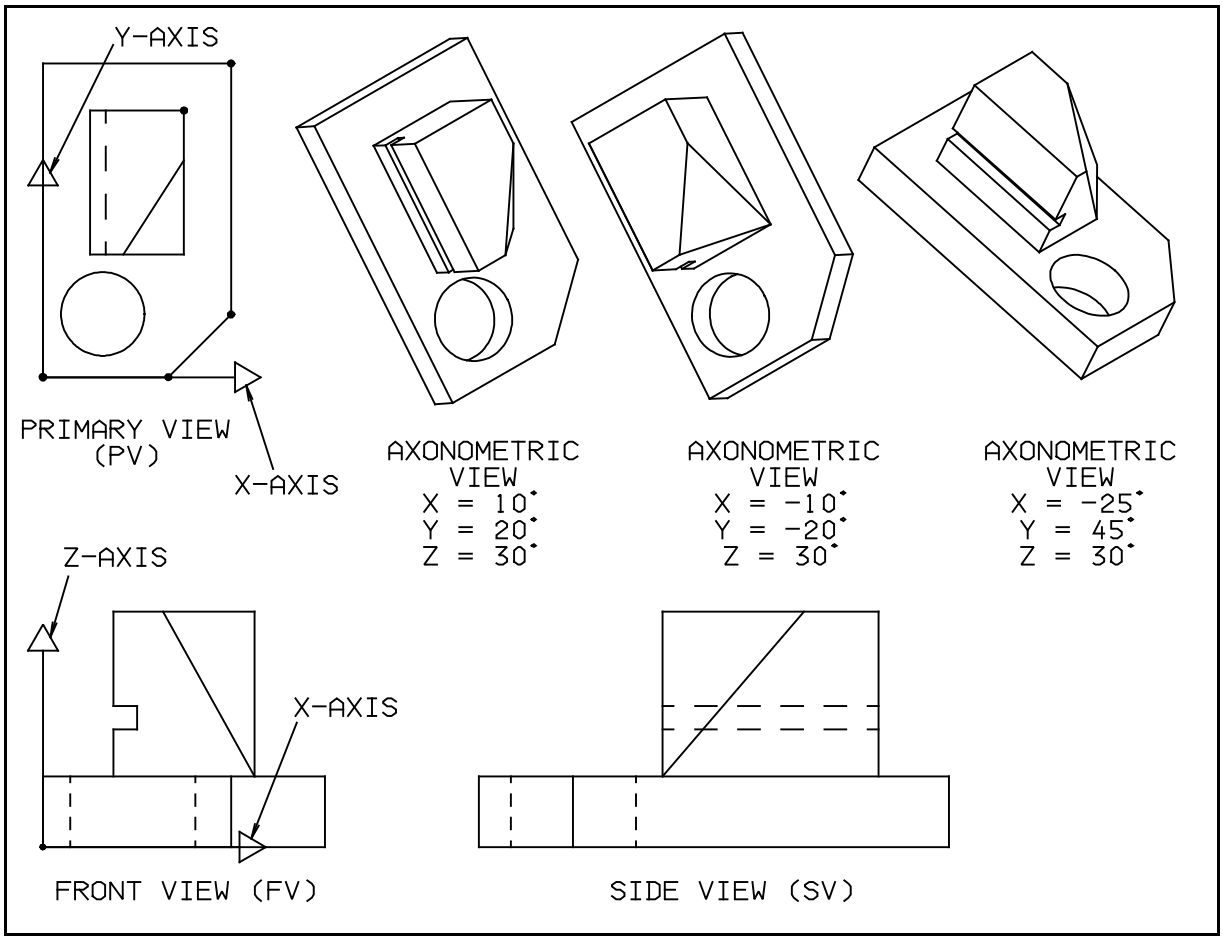

Figure 60 Examples of axonometric views

An isometric view is a special case of an axonometric view. The angles that the object rotates around the X,Y and Z axes are selected such that the view created is displayed at plus/minus 30 degrees to the auxiliary view axis. For example, an axonometric view created by rotating the object -45 degrees around the X axis, -35.26 degrees around the Y axis, and -30 degrees around the Z axis is equivalent to an isometric view created from the /RH/, /FRONT/ and /TOP/. An example of an isometric view is shown in Figure 61 on page 25-51.

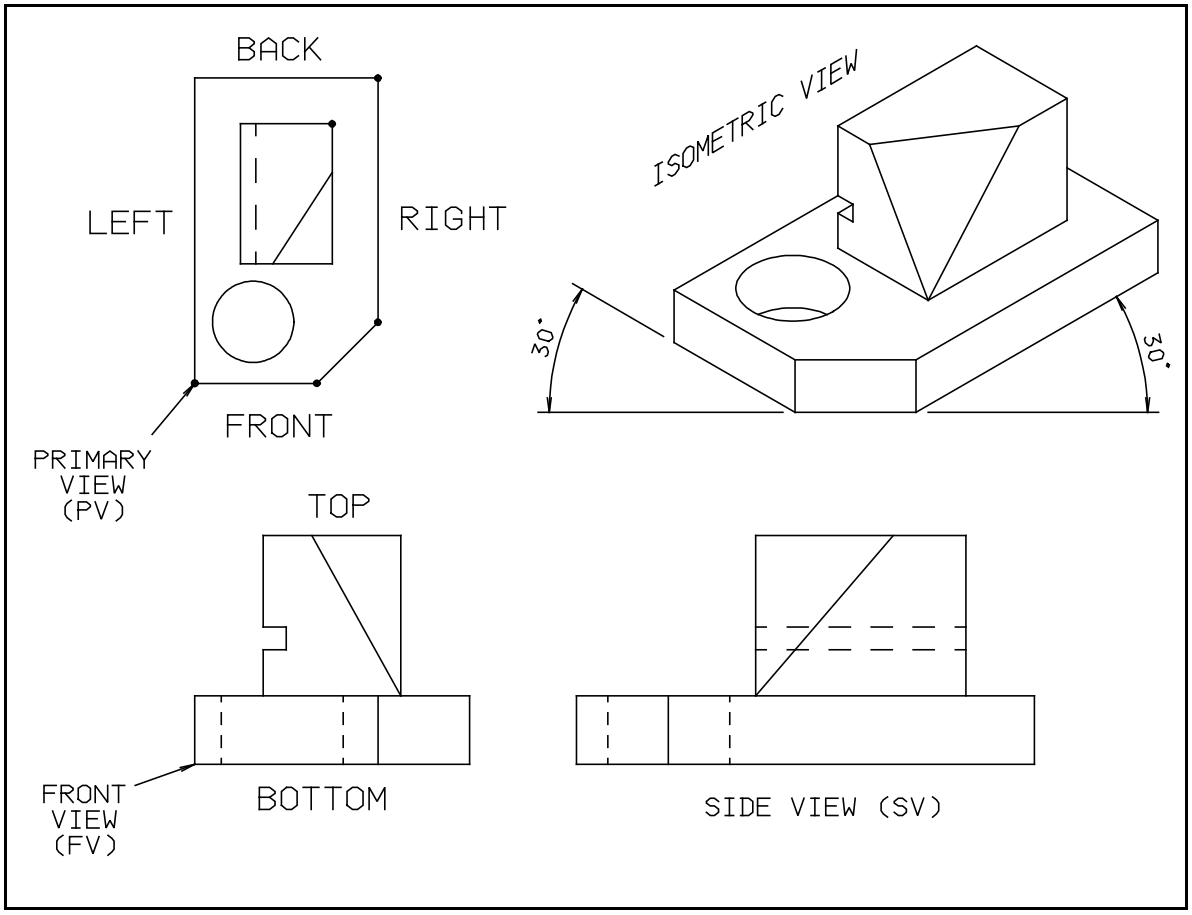

Figure 61 An example of an isometric view

In this example notice that the line of sight for an isometric view is determined with reference to the primary view (i.e. View PV) and the front view (i.e. View FV). The primary view is labelled with FRONT, BACK, LEFT and RIGHT. The front view is labelled with TOP and BOTTOM. When using the line of sight menu, refer to this figure to clarify directions.

Thus each isometric view uses a predefined set of axonometric angles. MICRO CADAM has available eight predefined isometric views. Examples of these eight isometric combinations are shown below:

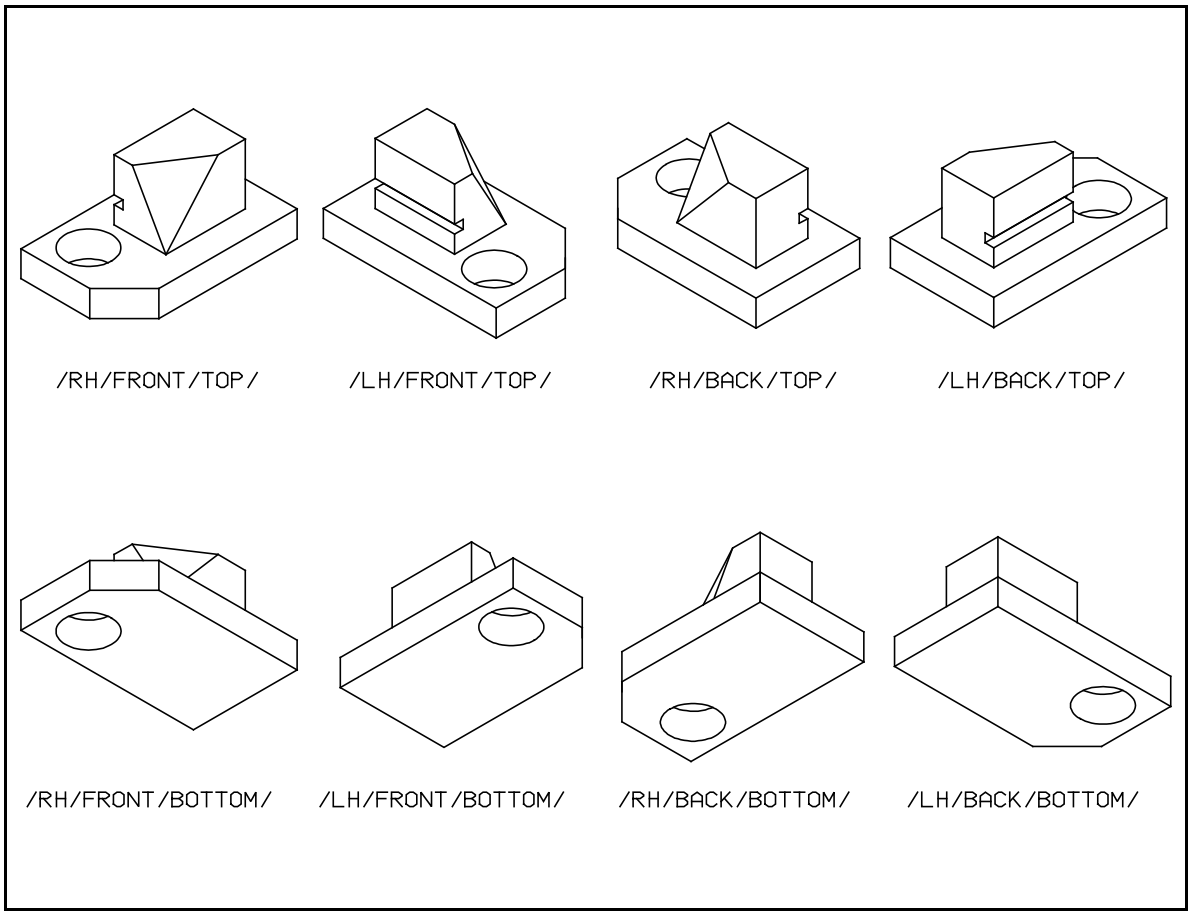

Figure 62 Examples of the eight predefined isometric views

When you select FKey AUXVIEW and submenu /START/ and /ISO/ the menu prompt ***Sel ln of sight menu / Key X,Y,Z ang / YN accept menu*** appears near the top of the display screen, and the submenu ***/RH/LH//FRONT/BACK//TOP/BOTTOM//RETURN*** appears near the bottom of the screen. You can start either an axonometric view, or an isometric view, depending on which action you take first.

If the first thing you do is to key in the X,Y,Z angles at which you want the object rotated, an axonometric view will be created.

If the first thing you do is to press the Y/N button on the mouse to accept the line of sight menu, an isometric view will be created.

CREATING AN AXONOMETRIC VIEW:

To create an axonometric view, follow these steps: (NOTE: It is assumed that three orthographic views (View PV, View FV and View SV) have been finished prior to starting this axonometric view. **If you do not have these views ready, change to CAD,TRAIN and call the drawing "AUXVIEW EXAMPLE ,3" to use for this exercise.**)

1. Select FKey AUXVIEW and submenus /START/ and /ISO/. The menu prompt ***Sel ln of sight menu / Key X,Y,Z ang / YN accept menu*** appears near the top of the screen.

2. Key in the angles that the object is rotated around the X,Y and Z axes. For example, key in 10,20,30. The menu prompt ***Def origin / YN origin*** appears.

3. Select a point in view PV. This will capture the X and Y coordinates of the point that will align with the origin in the newly formed axonometric view. The menu prompt ***Key Z = 0.0000 / Sel edge line or point*** appears.

4. Define the elevation of the point selected in view PV by selecting a point or line in view FV, or keying in an elevation. Note that view PV provides the X and Y, and view FV provides the Z coordinate of the origin point. The menu prompt ***Def location*** appears.

5. Indicate a position somewhere on your display screen where you want the origin of the newly formed axonometric view to appear. The menu prompt ***Key scale = 1.000*** appears.

6. Key in the scale you want to use for the view, or press the YN button on the mouse and accept the displayed scale. The menu prompt ***Key ID*** appears.

7. Key in any two character designation to identify the view. For example key in ***V1***.

8. The axis block appears for the newly created axonometric view. The menu prompt ***YN remove axis block*** appears. Press the Y/N button on the mouse and the axis block will disappear.

9. Place a point at the origin of the new view. Select FKey POINT. Press the enter key twice. A point appears at the origin of the new view.

10. Project geometry from existing orthographic views, into the new axonometric view. The method for projecting geometry into an axonometric view is identical to that for a true view. Please go to the section *C) CONSTRUCT THE TRUE VIEW* on page 25-40 and follow the steps there. (Replace all references to View TR with View V1).

CREATING AN ISOMETRIC VIEW:

To create an isometric view, follow these steps: (NOTE: It is assumed that three orthographic views (ViewS PV, FV and View SV) have been finished prior to starting this isometric view). **If you do not have these views ready, change to CAD,TRAIN and call the drawing "AUXVIEW EXAMPLE ,3" to use for this exercise.**

1. Select FKey AUXVIEW and submenus /START/ and /ISO/. The menu prompt ***Sel ln of sight menu / Key X,Y,Z ang / YN accept menu*** appears near the top of the display screen. Select the line of sight submenu near the bottom of the screen. See Figure 62 on page 25-52 to view the isometric views created with the different combinations.

2. Press the Y/N key on the mouse to accept the **line of sight** menu and proceed to construct the isometric view. The menu prompt ***Def origin / YN origin*** appears.

3. Select a point in view PV. This will capture the X and Y coordinates of the point that will align with the origin in the newly formed isometric view. The menu prompt ***Key Z = 0.0000 / Sel edge line or point*** appears.

4. Define the elevation of the point selected in view PV by selecting a point or line in view FV, or keying in an elevation. Note that view PV provides the X and Y, and view FV provides the Z coordinate of the origin point. The menu prompt ***Def location*** appears.

5. Indicate a position somewhere on your display screen where you want the origin of the newly formed isometric view to appear. The menu prompt ***Key scale = 1.000*** appears.

6. Key in the scale you want to use for the view, or press the YN button on the mouse and accept the displayed scale. The menu prompt ***Key ID*** appears.

7. Key in any two character designation to identify the view. For example key in ***IS***.

8. The axis block appears for the newly created isometric view. The menu prompt ***YN remove axis block*** appears. Press the Y/N button on the mouse to erase the axis block.

9. Place a point at the origin of the new view. Select FKey POINT. Press the enter key twice. A point appears at the origin of the new view.

10. Project geometry from existing orthographic views, into the new isometric view. The method for projecting geometry into an isometric view is identical to that for a true view. Please go to the section *C) CONSTRUCT THE TRUE VIEW* on page 25-40 and follow the steps there. (Replace all references to View TR with View IS).

FKey AUXVIEW

SUBMENU /CHOOSE/

SUBMENU /NO SHO/ and /SHO/

SUBMENU /2-VU/ and /3-VU/

SUBMENU /MOV/

SUBMENU /SCL/

SUBMENU /ERS/

SUBMENU /CHGPV/

FKEY AUXVIEW /CHOOSE/:

FKey AUXVIEW submenu /CHOOSE/ allows you to make an existing auxiliary view active. Auxiliary views are considered to be like a stack of transparencies, with the active transparency on top of the stack. Making an existing auxiliary view active means moving it to the top of the stack.

Imagine that you have several transparencies on top of an overhead projector. The overhead projector displays a single image on its screen. If you were to take a marker and mark on top of the stack, you would mark only on the top transparency. If you were to try and erase a line, you could erase the line only if it were on the top transparency. If the line you wanted to erase was on a transparency somewhere else in the stack, you would have to move that transparency to the top before you could erase the line on it. This is called making the view active. Please see Figure 2 on page 25-2 for a graphic illustrating the transparency analogy.

Here are some important points to be aware of when working with auxiliary views:

- All geometry is projected into the active auxiliary view. For example, if you are trying to project information into view IS, then view IS ***must*** be the active auxiliary view.

- The active auxiliary view is always displayed near the top of the display page. For example, the word ***View FV*** near the top of the screen means that auxiliary view FV is the active view.

- You can only edit (i.e. erase, no sho, edit notes, etc.) information in the active auxiliary view.

- If you are unable to erase an element, make sure you are in the same view as the element.

- You can select points in other (i.e. non active) auxiliary views in two situations:

  - If you are projecting information from another auxiliary view (i.e. /2-VU/ projection between views). Note that in this situation you may also select a circle in another non active view. Lines tangent to the circle will be projected into the active auxiliary view.

  - If you are moving auxiliary views (i.e. submenu /MOV/) you may select points in other auxiliary views in order to align a points in the active auxiliary view with a point in the non active auxiliary view.

- You may select elements in other non active auxiliary views when using /3-VU/ projection.

When FKey AUXVIEW is selected, submenu /CHOOSE/ is underlined by default. The menu ***Key ID / Sel element / YN view = FV*** appears near the top of the display screen. There are three ways to make an auxiliary view active:

1) Key in the two character view name (i.e. SV)

2) Select any element in the view that you want to become active.

3) Press the Y/N button on the mouse and toggle through all existing auxiliary views.

The preferred method is #2, especially when you have 4 or 5 or more views in a drawing (model).

FKEY AUXVIEW /NO SHO/ and /SHO/:

FKey AUXVIEW and submenu /NO SHO/ allows you to temporarily conceal the display of a view (i.e. it moves into the no show world).

FKey AUXVIEW and submenu /SHO/ redisplays an entire view, all or part of which was temporarily concealed.

When FKey AUXVIEW and submenu /NO SHO/ is selected, the menu ***Key ID / Sel element / YN view = FV*** appears near the top of the display screen. There are three ways to no show an auxiliary view:

1) Key in the two character view name (i.e. SV)

2) Select any element in the view that you want to become active.

3) Press the Y/N button on the mouse and toggle through all existing auxiliary views.

The preferred method is #2.

When FKey AUXVIEW and submenu /SHO/ is selected, the menu ***Key ID / Sel element / YN view = FV*** appears near the top of the display screen. There are two ways to show an auxiliary view:

1) Key in the two character view name (i.e. SV)

2) Press the Y/N button on the mouse and toggle through all existing auxiliary views (i.e. press the Y/N button to show each auxiliary view).

FKEY AUXVIEW /2-VU/:

FKey AUXVIEW and submenu /2-VU/ allows you to project information ***between 2 views*** (i.e. from another auxiliary into the active auxiliary view).

When FKey AUXVIEW and submenu /2-VU/ is selected, the menu ***Sel point / Sel circle*** appears near the top of the display screen. Select a point in another (non active) view and an unlimited length line will be projected into the active view. Select a circle in another (non active) view and an unlimited length line will be projected, tangent to the circle, and into the active view.

Submenu /2-VU/ is used as follows:

- To develop a second view and any subsequent views from another view. Construction of lines representing X and Y coordinates can be projected from an existing view into the active view. Unlimited length lines are projected from existing points and circle tangents.

- To project lines tangent to a circle to create the edges of a cylinder in an isometric view.

There are many examples of the use of submenu /2-VU/ in the section on creating orthographic views in this chapter (starts on page 25-20) and in the QUICKSTART Chapter (Chapter 7).

FKEY AUXVIEW /3-VU/:

FKey AUXVIEW and submenu /3-VU/ allows you to project information ***between 3 views*** (i.e. from 2 non active auxiliary views into the third active auxiliary view). It is used to develop a third view (and any subsequent views) from two other (non active) views.

When FKey AUXVIEW and submenu /3-VU/ is selected, the menu prompt ***Sel edge line / Key Z = 0.0000*** appears near the top of the display screen. Select an edge line (i.e. a line defining the edge of a plane projected into the computer screen) in another (non active) view. The line will highlight (i.e. turn green) and the menu prompt ***Sel point / Sel element*** will now appear. Find a view that looks normal (i.e. at 90 degrees) onto the plane just defined by the edge line, and select lines, points and circles that are on that plane. These lines, points and circles will be projected into the active view.

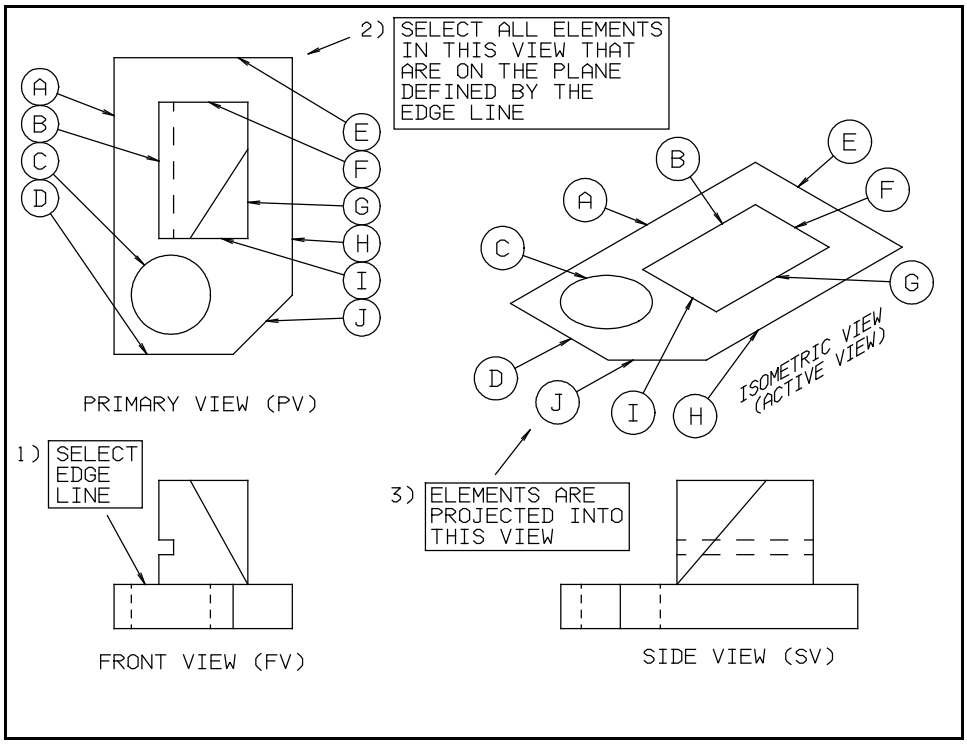

Figure 63 How 3-VU projection works

An example of this procedure is shown in the Figure 63 above. In this figure, the isometric view has just been created and is still active. Submenu /3-VU/ is selected and the menu prompt ***Sel edge line / Key Z = 0.0000*** appears. Select the edge line in view FV (i.e. step #1). The menu prompt ***Sel point / Sel element*** now appears. Select line 'A' in view PV (i.e. step #2) and line

’A’ appears in the isometric view (i.e. step #3). As each of the other lines and circles (i.e. ’B’ to ’J’) are selected in view PV, they are projected into the isometric view.

To select another edge line, select submenu /3-VU/ again and follow the menu prompts.

Should you know the elevation of the plane from which you want to project the elements you may also key in the elevation.

Note that the edge line that defines the edge of the plane, and the plane itself are at 90 degrees to each other (i.e. they are orthographic to each other).

There are many other examples of the use of submenu /3-VU/ in the section on creating true views in this chapter (starts on page 25-40).

FKEY AUXVIEW /MOV/:

FKey AUXVIEW and submenu /MOV/ allows you to move the active auxiliary view to a new position or alignment, or to turn it to a new angle (the angle is relative to paper coordinates). The view is relocated and/or rotated with respect to its own origin, but without affecting its relationship to other views. Each of the auxiliary views is geometrically related to each other. This geometric relationship is independent of auxiliary view location, angle, or scale.

When FKey AUXVIEW and submenu /MOV/ is selected, the menu prompt ***Sel pivot / YN turn*** appears near the top of the display screen. Select a point in the active view that will be used as a pivot point. The menu prompt ***Sel point / Ind X / Key X = 0.000*** now appears. You now have three choices:

- Select a point in another view. This X coordinate of this point will used as the new X coordinate for the pivot point in the active view.
- Indicate a position on the screen. This X coordinate of this indicated position will used as the new X coordinate for the pivot point in the active view.
- Key the X coordinate. The keyed X coordinate will used as the new X coordinate for the pivot point in the active view.

Once you have obtained the X coordinate, the menu prompt ***Sel point / Ind Y / Key Y = 0.000*** now appears. You now have the same three choices as for the X coordinate:

- Select a point in another view. This Y coordinate of this point will used as the new Y coordinate for the pivot point in the active view.
- Indicate a position on the screen. This Y coordinate of this indicated position will used as the new Y coordinate for the pivot point in the active view.
- Key the Y coordinate. The keyed Y coordinate will used as the new X coordinate for the pivot point in the active view.

Once you have obtained the Y coordinate, the auxiliary view will move to the new location.

Note that the entire auxiliary view (i.e. the transparency) will move to the new location.

When selecting the X and Y coordinate points, all points in the drawing are selectable; it acts as if all points are temporarily in the same view.

Should you press the Y/N button on the mouse as you start the /MOV/ operation, you can rotate the auxiliary view as you translate it. When FKey AUXVIEW and submenu /MOV/ is selected, the menu prompt ***Sel pivot / YN turn*** appears near the top of the display screen. Press the Y/N button on the mouse. The menu prompt ***Sel pivot*** appears. Select a point in the active view that will be used as a pivot point. The menu prompt ***Key angle*** appears. Key the angle you want the auxiliary view to rotate. The menu prompt ***Sel point / Ind X / Key X = 0.000*** now appears. The remaining steps are identical to those above.

Note that the angle you key is the angle relative to paper coordinates.

TIP: Never use FKey GROUP and submenu TRAP and TRANSLATE to move an entire Auxiliary View. This will misalign the related auxiliary views. Always use AUXVIEW and submenu /MOV/ to align and move your auxiliary views!

FKEY AUXVIEW /SCL/:

FKey AUXVIEW and submenu /SCL/ allows you to change the scale of the active view, without affecting its relationship to other auxiliary views.

When FKey AUXVIEW and submenu /SCL/ is selected, the menu prompt ***Sel point / Key scale = 1.000*** appears near the top of the display screen. If you select a point in the active view the point will be used as a pivot point for scaling the view (i.e. the view will scale *around* this point). (Note: If you do not select a point then the pivot point of the view is used as the default pivot point). The menu prompt ***Key scale = 1.000*** (the number may vary) now appears. Key in the auxiliary view scale you want and the view will be scaled.

Remember that MICRO CADAM always draws geometry full size. The auxiliary view scale only affects the size of the *picture* you are looking at. This is exactly what happens when you draw something on your drafting board using an architectural or engineering scale.

FKEY AUXVIEW /ERS/:

FKey AUXVIEW and submenu /ERS/ allows you to delete an entire view in one operation. The primary view cannot be erased, and neither can a parent view on which other views are dependent.

When FKey AUXVIEW and submenu /ERS/ is selected, the menu prompt ***YN erase*** appears near the top of the display screen. Press the Y/N button on the mouse and the active auxiliary view will be erased.

Should you get an error message ***Non-erasable view*** this means that the active view has been used to create another orthographic, true or isometric view. You cannot erase the active view because the other view depends on the active view for its existence.

Should you get the error message ***Illegal oper in PV*** this means that you are trying to erase view PV. Every drawing has a view PV and it cannot be erased.

FKEY AUXVIEW /CHGPV/:

FKey AUXVIEW and submenu /CHGPV/ allows you to designate an auxiliary view as the primary view and exchange their identities. This option is rarely used because of its impact on other views.

CHAPTER 26

FKey DETAIL

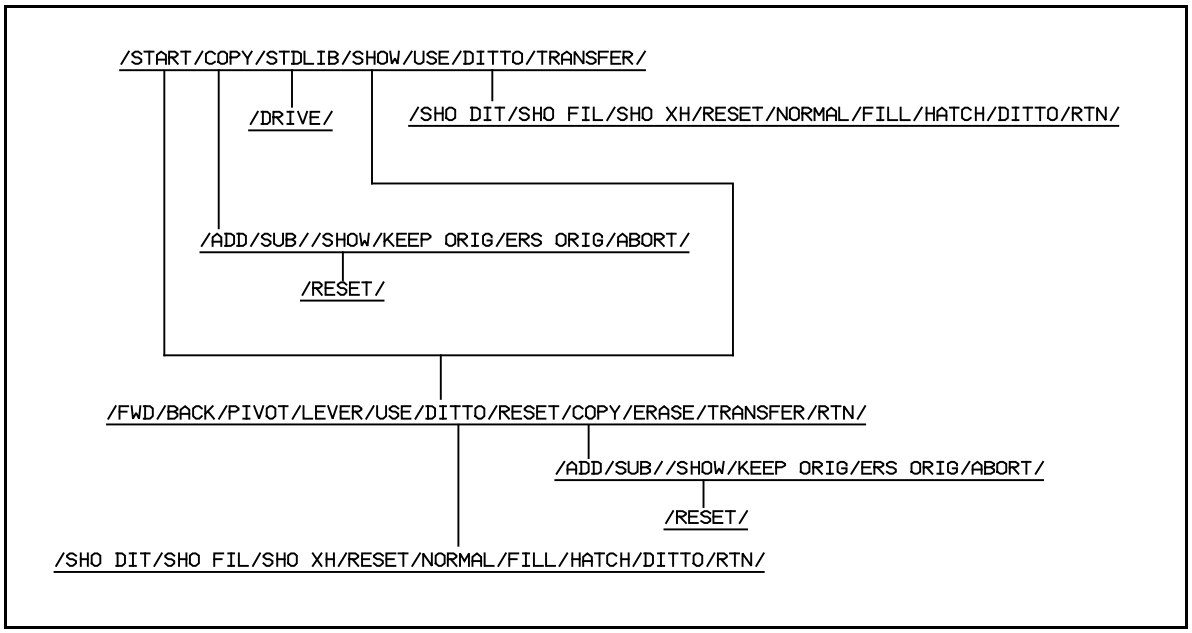

Figure 1 - Menu Item Tree for FKey DETAIL

FKey DETAIL allows you to do the following:

- Start (ie. create) a new detail page
- Create new geometry on any detail page
- Copy geometry **from the front page** to the next available detail page
- Copy geometry **from a detail page** to the next available detail page (i.e. from one detail page to another detail page)
- Access the standard library and copy standard library items to the next available detail page.
- Place a ditto onto the front page

- Place a ditto from one detail page onto another detail page
- Place a use onto the front page
- Place a use from one detail page onto another detail page
- Transfer **an entire view** to the next available detail page on another drawing
- Transfer **an entire detail page** to the next available detail page on another drawing

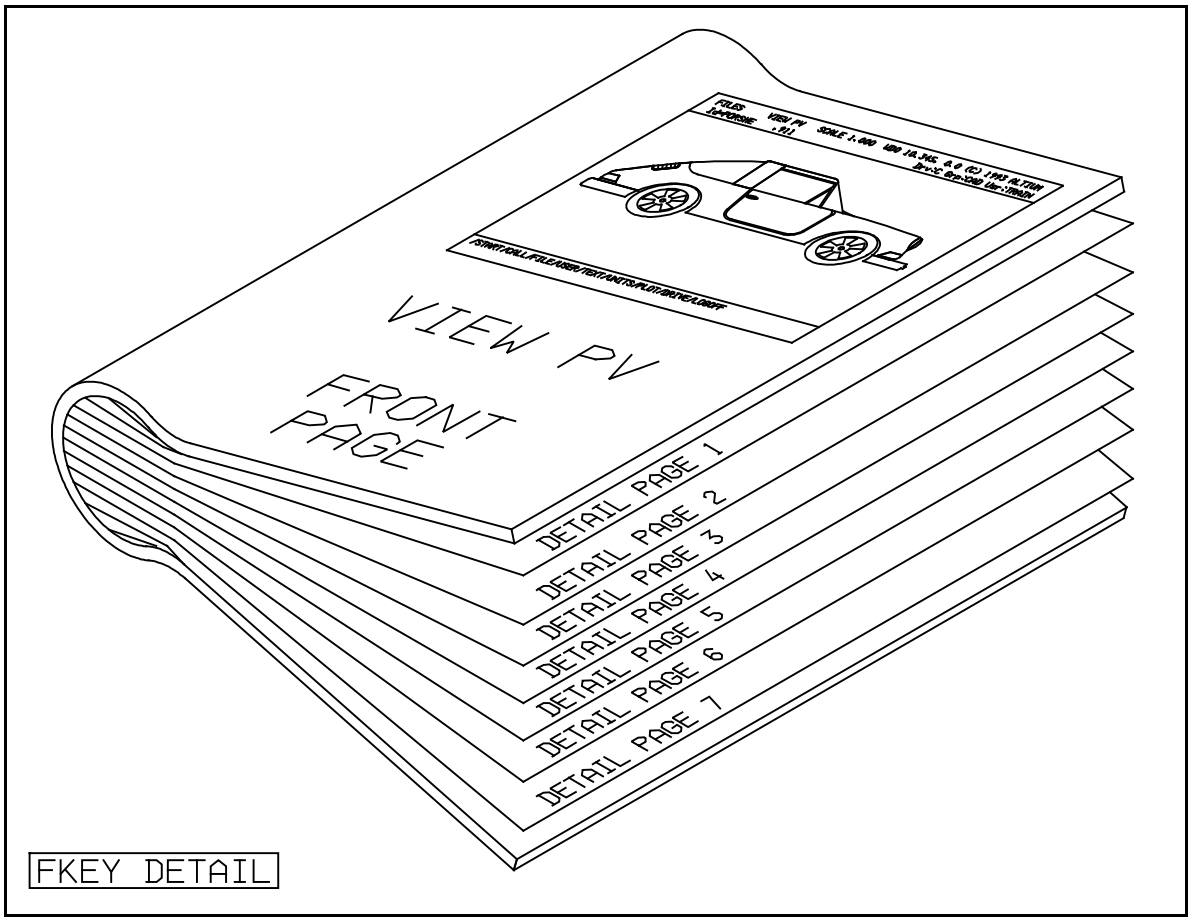

Figure 2 An example of the program structure in MICRO CADAM

The MICRO CADAM program structure can be compared to a book. The front display page where you do most of the drawing is like the cover of a book, and the detail pages are like pages in the book. Figure 2 on page 26-2 shows a graphic illustrating this concept (Note that only 7 detail pages are shown in this graphic; 63 are available).

Geometry can be drawn on any of the detail pages. This geometry can then be placed on the front display page as an image (i.e. a ***DITTO***) or as geometry (i.e. a ***USE***).

The front page shows only one view...view PV. View PV acts just like a transparency on an overhead projector. It is transparent; you can look through it; you can draw on it; and you can erase elements on it. Other views (i.e. FV (Front View), SV (Side View), etc.) can also be present on the front page (or cover of the book) as well. See the Chapter 25 on AUXVIEW for more information on Auxiliary Views and their usage.

REASONS FOR USING DETAIL PAGES:

There are several reasons why you would want to use detail pages:

A. Detail pages can be used to create individual parts. These parts can be brought together on one of the main views to form an intricate assembly.

B. There are times when drawing an object, component or assembly on the front page, you want to temporarily leave the congestion of the model and draw an object by itself. This helps when you can leave the congestion of the front page and draw only the object you want.

C. There are times when you want multiple copies of geometry on the front page. For example you may want to draw a bolt or a screw on a detail page, and then *use* or *ditto* this bolt or screw many times onto the front page. Any dittos on the front page will automatically update if the original geometry on the detail page is changed. Thus you could instantly update hundreds of dittos by changing the geometry on the detail page once, and without leaving your model.

D. Dittos are a more efficient use of computer memory. Dittos use only 7 words of computer memory, no matter how much geometry is on the detail page. Since MICRO CADAM has a fixed model size of approximately 16,000 words, you can draw much more efficiently by creating the geometry once (on a detail page) and placing multiple dittos on the front page. As an example, lets say you were drawing a complicated hydraulic valve that used 1,200 words. If you needed 10 copies of this valve (as geometry) on the front page you would use 10 x 1,200 = 12,000 words of MICRO CADAM model space. If you drew the valve once on a detail page and then placed 10 dittos on the front page you would use 1,200 + (10 x 7) = 1270 words. This is a saving of 12,000 - 1270 = 10,730 words.

FUNCTION KEY DETAIL SUBMENU OPTIONS:

- /START/ — Allows you to start a blank detail page. You may then proceed to create geometry on this blank detail page.
  - /FWD/ — Allows you to move forward through the detail pages
  - /BACK/ — Allows you to move back through the detail pages
  - /PIVOT/ — Allows you to define the pivot point of the detail page.
  - /LEVER/ — Allows you to define a lever point of a detail page.
  - /USE/ — Allows you to place a USE (i.e. geometry) onto the current detail page.
  - /DITTO/ — Allows you to place a DITTO (i.e. an image) onto the current detail page.
    - /SHO DIT/ — Allows you to display only dittos.
    - /SHO FIL/ — Allows you to display only filled dittos.
    - /SHO XH/ — Allows you to display only cross hatched dittos.
    - /RESET/ — Redisplays the entire drawing after /SHO DIT/, /SHO FIL/ or /SHO XH/ has been selected.
    - /NORMAL/ — Sets the ditto type to normal.
    - /FILL/ — Sets the ditto type to filled.
    - /HATCH/ — Sets the ditto type to cross hatched.
    - /DITTO/ — Places a ditto on another detail page.
    - /RTN/ — Returns to the previous submenu level.
  - /RESET/ — Returns from the present detail page to the front page. This is an identical function to /RTN/.

- /COPY/ Allows you to copy geometry from your existing detail page to the next available detail page.
  - /ADD/ Allows you to add members to the geometry that is going to be copied to the next available detail page.
  - /SUB/ Allows you to subtract (i.e. remove) members from the geometry that is going to be copied to the next available detail page.
  - /SHOW/ Allows you to show only the geometry that is going to be copied.
    - /RESET/ Redisplays the entire detail page after /SHOW/ has been selected.
  - /KEEP ORIG/ The original geometry is kept.
  - /ERS ORIG/ The original geometry is erased.
  - /ABORT/ The copy operation is aborted.
- /ERASE/ The detail page is erased. Note that this is only possible when the detail page has NOT been dittoed anywhere else. If it has been dittoed you have to find the ditto's and erase them first.
- /TRANSFER/ Allows you to transfer all geometry ***from this detail page on the present drawing, to the next available detail page on another drawing.***
- /RTN/ ***RETURNS TO THE FRONT PAGE!*** Note that this is the only place where you can exit the detail pages and return to the front page. If you are in another function key in the detail pages, you MUST select FKey DETAIL and then submenu /RTN/ in order to return to the front page. When you are on the front page note that the word ***View*** appears near the top of the display screen. This is the only way you can tell that you are on a front page (and not on a detail page).

- /COPY/ Allows you to copy geometry from your front page to the next

available detail page.

- /ADD/ Allows you to add members to the geometry that is going to be copied to the next available detail page.
- /SUB/ Allows you to subtract (i.e. remove) members from the geometry that is going to be copied to the next available detail page.
- /SHOW/ Allows you to show only the geometry that is going to be copied.
  - /RESET/ Redisplays the entire detail page after /SHOW/ has been selected.
- /KEEP ORIG/ The original geometry is kept.
- /ERS ORIG/ The original geometry is erased.
- /ABORT/ The copy operation is aborted.

- /STDLIB/ Allows you to access the standard library and copy standard library items to the next available detail page on your present drawing.
  - /DRIVE/ Allows you to change the drive where the standard library is found.
- /SHOW/ ***MOVES YOU FROM THE FRONT PAGE TO THE ACTIVE DETAIL PAGE!*** Note that this is the only way to move to the active detail page (i.e. without starting a new blank one). When you are in a detail page note that the word ***Detail*** appears near the top of the display screen. This is the only way you can tell that you are in a detail page (and not the front page).
  - **SEE THE SUBMENU OPTION DEFINITIONS UNDER SUBMENU /START/ ON PAGE 26-4. THE DEFINITIONS ON THAT PAGE ARE IDENTICAL TO THOSE HERE.**
- /USE/ Allows you to place a USE (i.e. geometry) onto the front page.
- /DITTO/ Allows you to place a DITTO (i.e. an image) onto the front page.

- /SHO DIT/ Allows you to display only dittos.
- /SHO FIL/ Allows you to display only filled dittos.
- /SHO XH/ Allows you to display only cross hatched dittos.
- /RESET/ Redisplays the entire drawing after /SHO DIT/, /SHO FIL/ or /SHO XH/ has been selected.
- /NORMAL/ Sets the ditto type to normal.
- /FILL/ Sets the ditto type to filled.
- /HATCH/ Sets the ditto type to cross hatched.
- /DITTO/ Places a ditto on the front page.
- /RTN/ Returns to the previous submenu level.

· /TRANSFER/ Allows you to transfer all geometry ***from the active auxiliary view on the front page of the present drawing, to the next available detail page on another drawing.*** (Note: The target drawing should already exist before you attempt a transfer.)

Specific information on the submenu options for FKey DETAIL are listed with page numbers as follows:

FKey DETAIL		
NOTE SUBMENU ITEM	DESCRIPTION	PAGE NO.
BEGINNER SECTION		
/START/	1) FKEY DETAIL /START/ CONCEPTS:	26-14
	2) DETAIL PAGE QUESTIONS:	26-15
	3) DETAIL PAGE CONCEPTS:	26-16
	4) MESSAGES:	26-19
/COPY/	5) FKEY DETAIL /COPY/ CONCEPTS:	26-22
	6) REASONS FOR USING FKEY DETAIL /COPY/:	26-22
	7) COPY GEOMETRY FROM THE FRONT PAGE TO A DETAIL PAGE:	26-25
	8) COPY GEOMETRY FROM ONE DETAIL PAGE TO ANOTHER DETAIL PAGE:	26-25
/USE/ /DITTO/	9) FKEY DETAIL /USE/ AND /DITTO/ CONCEPTS:	26-28
	10) MANIPULATING A DITTO:	26-30
	11) THE PIVOT POINT:	26-31
	12) THE LEVER POINT:	26-32
	13) PLACING A USE OR DITTO IN YOUR DRAWING:	26-33
	14) EXAMPLE - PLACING A USE IN YOUR DRAWING:	26-34
	15) EXAMPLE - PLACING A DITTO IN YOUR DRAWING:	26-35
	16) NORMAL, FILLED AND CROSS HATCHED DITTOS:	26-37
	17) USING A CROSS HATCHED DITTO TO PLACE AN AREAFILL ONTO A	26-38

FKey DETAIL		
NOTE SUBMENU ITEM	DESCRIPTION	PAGE NO.
ADVANCED SECTION		
/TRANSFER/	18) FKEY DETAIL /TRANSFER/ CONCEPTS:	26-44
	19) TO TRANSFER AN ENTIRE VIEW FROM DRAWING NO. 1 TO A DETAIL PAGE ON DRAWING NO. 2:	26-44
	20) TO TRANSFER A DETAIL PAGE FROM DRAWING NO. 1 TO A DETAIL PAGE ON DRAWING NO. 2:	26-46
	21) TO TRANSFER PART OF A VIEW (I.E. SELECTED GEOMETRY) FROM DRAWING NO. 1 TO A DETAIL PAGE ON DRAWING NO. 2:	26-47
/STDLIB/	22) FKEY DETAIL /STDLIB/ CONCEPTS:	26-50
	23) CREATING YOUR OWN STANDARD LIBRARY:	26-52
	24) ACQUIRING STANDARD LIBRARIES:	26-53
	25) USING THE STANDARD LIBRARY TO FACILITATE THE TRANSFER OF MULTIPLE DETAIL PAGES FROM ONE DRAWING TO ANOTHER:	26-54
PRACTICE EXERCISE		
	A) LOGON TO MICRO CADAM AND START A NEW DRAWING:	26-58
	B) CHANGE THE WINDOW SIZE AND ADD DESCRIPTIVE TEXT TO THE DRAWING:	26-60
	C) START A NEW, BLANK DETAIL PAGE, AND DRAW GEOMETRY ON IT:	26-61
	D) RETURN TO THE FRONT PAGE AND PLACE A DITTO AND A USE THERE:	26-61
	E) START THE OTHER TWO DETAIL PAGES, DRAW GEOMETRY THERE, AND THEN PLACE A DITTO AND USE ON THE FRONT PAGE:	26-63
	F) PLACE MULTIPLE COPIES OF A DITTO ON THE FRONT PAGE AND VERIFY THAT EACH DITTO UPDATES WHEN THE GEOMETRY ON THE DETAIL PAGE IS CHANGED:	26-64

FKey DETAIL

BEGINNER

SECTION

FKey DETAIL

SUBMENU / START /

1) FKEY DETAIL /START/ CONCEPTS:

FKey DETAIL submenu /START/ allows you to start (i.e. begin) a new, empty detail page. Geometry can then be created on this detail page.

Before you select submenu /START/ you will notice the word ***View*** is present (just to the left of scale) near the top of the display page (e.g. View PV, View FV, etc.). When the word ***View*** is present, this means that you are on the front page of the drawing. **NOTE: THIS IS THE ONLY WAY THAT YOU KNOW WHETHER YOU ARE ON THE FRONT PAGE OF THE DRAWING**.

After you select submenu /START/, a new, empty detail page will be started. You will notice the word ***Detail*** is present near the top of the display page. When the word ***Detail*** is present, this means that you are on a detail page of the drawing. **NOTE: THIS IS THE ONLY WAY THAT YOU KNOW WHETHER YOU ARE ON A DETAIL PAGE OF THE DRAWING**.

Therefore look near the top of the display screen to see whether the word ***View*** or ***Detail*** is displayed. The word ***View*** means your are on the front page (i.e. the cover of the book ... see Figure 2 on page 26-2) and the word ***Detail*** means you are on a detail page (i.e. other pages inside the book ... see Figure 2 on page 26-2).

(NOTE THAT THE CURRENT ACTIVE FKEY APPEARS IN THE TOP LEFT CORNER OF THE DISPLAY SCREEN. DO NOT MISTAKE FKEY DETAIL FOR THE *VIEW* OR *DETAIL* INFORMATION YOU ARE LOOKING FOR. REMEMBER THAT YOU COULD BE ON THE FRONT PAGE (i.e. *View* is present) AND STILL HAVE THE WORD **DETAIL** IN THE TOP LEFT CORNER OF THE SCREEN!) See Chapter 6 (CONCEPTS) for parts of the screen.

When you are on the front page, you could be in any active view. To change from one active view to another select FKey AUXVIEW submenu /CHOOSE/ and select any element in the view you want to change to, key in the 2 character view designator (e.g. FV), or press the Y/N button on the mouse to toggle through available views (see the chapter on AUXVIEW for more information). Your current auxiliary view is called your active view.

When you are on a detail page, you could be on any detail page. To change from one detail page to another detail page select submenu options /FWD/ and /BACK/ to flip through the detail pages. Your current detail page is called the active detail page.

A new empty MICRO CADAM model has only View PV existing and may have up to 63 detail pages. Each time another auxiliary view is created, the number of available detail pages is decreased by one. The total of auxiliary views and detail pages must not exceed 63. If you try to exceed this number the error message *Too many views/details* will be displayed near the top of the screen. For an example of the view/detail page relationship, see the following table:

AUXILIARY VIEWS PRESENT	NUMBER OF AVAILABLE DETAIL PAGES
PV	63
PV, FV	62
PV,FV,SV	61
PV,FV,SV,V1,V2,V3,V4,V5,V6,V7	54

NOTE: When you are in a detail page, FKey AUXVIEW does not work.

2) DETAIL PAGE QUESTIONS:

There are several important questions that may arise about using FKey DETAIL. They are summarized below:

1. **How do you start a detail page?**

   First, make sure you are on the front page. Look at the top of the display page and see if the word *View* is there. If it is you are on the front page and are ready to start a new detail page.

   (If the word *Detail* is there you are on a detail page. See paragraph 2 for instructions on how to return to the front page.)

   Select FKey DETAIL and submenu /START/. That's it! The word *View* disappears and the word *Detail* appears. You are on the next available detail page. This means if there are no detail pages existing in the drawing, the next available page is 1; if pages 1, 2, 3, 4, 5, 6, 7, 8, 9, 10, and 11 are already existing, the next available detail page is 12.

2. **If you are on a detail page, how do you return to the front page?**

While on a detail page you can be in any function key creating and editing geometry. There is only one way to return the to the front page: select FKey DETAIL and submenu /RTN/ (on the right end of the submenu). The word *Detail* will disappear and be replaced by the word *View*. You are now on the front page.

3. **If you are on the front page, how do you go to the detail pages (without starting a new detail page)?**

If you are on the front page (i.e. the word *View* appears near the top of the display page) select FKey DETAIL and submenu /SHOW/. The word *View* will disappear and the word *Detail* will appear. You are now in the current active detail page.

You may also select an existing ditto on the front page, (Immediately after selecting FKey DETAIL), and you will be placed on the detail page where the original geometry is located.

4. **How do I know which detail page a ditto came from?**

To place yourself on the detail page that was used to create a ditto, select FKey DETAIL and then select the ditto on the screen. You will immediately be placed into the detail page where the original geometry is located. This procedure can be very useful when dozens and dozens of dittos are used on a drawing.

3) DETAIL PAGE CONCEPTS:

Many of the concepts of detail pages are shown on Figure 3 on page 26-17. Let's take a look at this figure and list some important things about it:

1. **MAXIMUM NUMBER OF DETAIL PAGES:**

A maximum of 63 detail pages are available. The number of detail pages is reduced by one each time another auxiliary view is started.

2. **THE ACTIVE DETAIL PAGE:**

The active detail page is the page you are currently on when in the detail pages, or the detail page you just left when you have returned to the front page. For example, if you are currently on detail page 18, then page 18 is the active detail page.

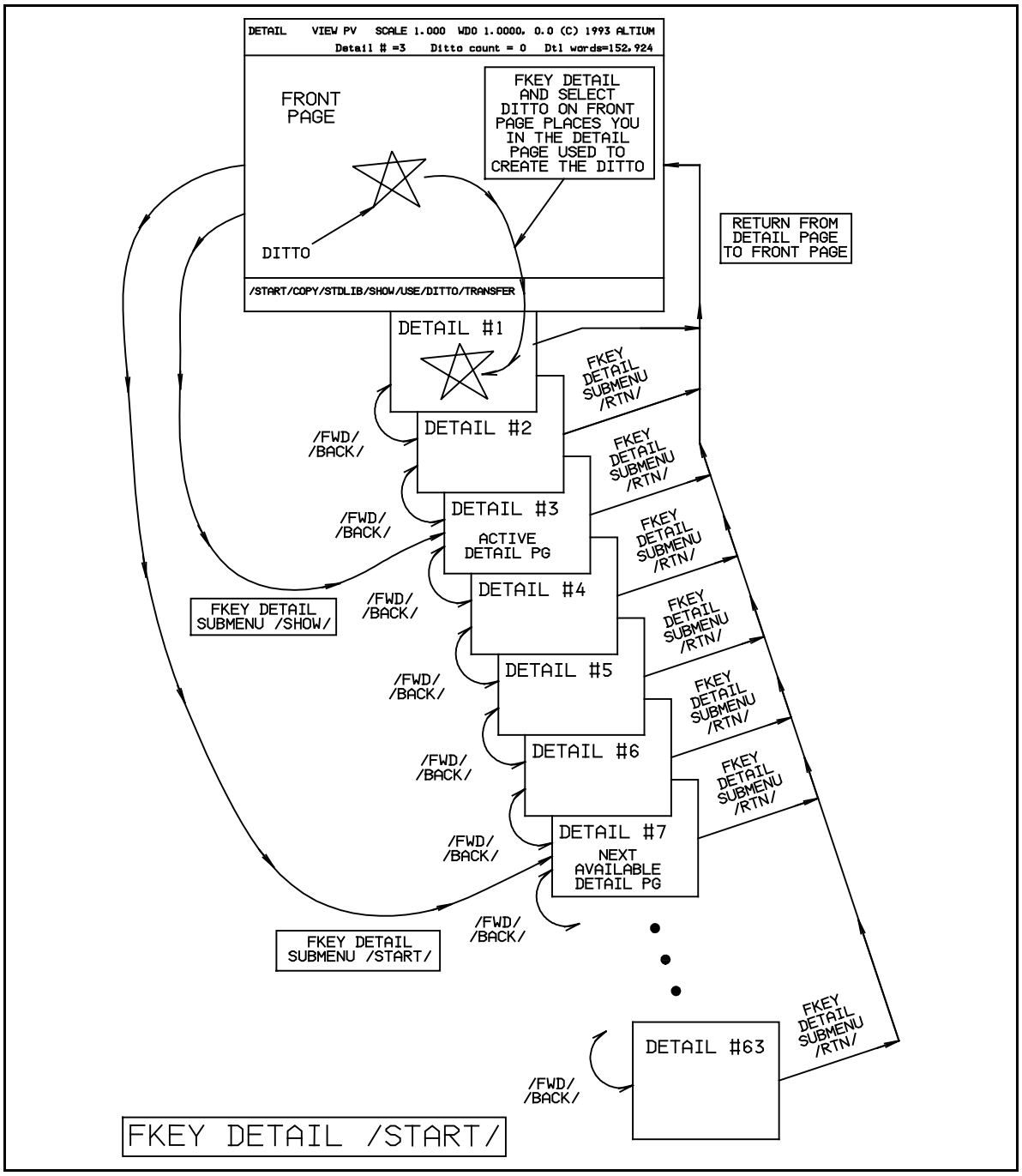

Figure 3 An example of detail page layout

The active detail page is the default detail page for placing a use or ditto on the front page of your drawing.

The active detail page may be changed by 'flipping' through the detail pages (i.e. submenu /FWD/ and /BACK/) to find the page you want to be active, and then returning to the front page (i.e. submenu /RTN/), or by keying in the number if known.

3. **THE NEXT AVAILABLE DETAIL PAGE:**

All detail pages are numbered sequentially from 1 to a maximum of 63. When a drawing is first started, it has no detail pages. The next available detail page in this case is detail page 1. Should a drawing have 23 detail pages, then the next available detail page is detail page 24.

4. **STARTING A NEW BLANK DETAIL PAGE:**

Select FKey DETAIL and submenu /START/. You will be placed on the next available detail page.

5. **MOVING FROM THE FRONT PAGE TO THE DETAIL PAGES:**

To move from the front page to the detail pages select FKey DETAIL and submenu /SHOW/. You will be immediately placed in the active detail page.

6. **RETURNING FROM THE DETAIL PAGES TO THE FRONT PAGE:**

To leave the active detail page and return to the front page select FKEY DETAIL and submenu /RTN/. You will be immediately returned to the front page from whatever detail page you are on.

7. **MOVING FROM THE FRONT PAGE TO THE DETAIL PAGE WHERE THE DEFINING GEOMETRY FOR A DITTO RESIDES:**

Each ditto is 'powered' by the original geometry on its detail page. Therefore each ditto 'knows' where the detail page with its defining geometry is located. Select FKey DETAIL and then select the ditto on the front page. You will be immediately placed in the detail page where the defining geometry resides for the ditto just selected.

4) MESSAGES:

When you are in a detail page there are several messages that appear near the top of the display screen. Examples are shown below:

- **Detail # = 6** This shows the number of the current detail page

- **Ditto count = 12** This shows the number of times the current detail page has been used as a ditto.

- **Dtl words = 26, 147** This shows the number of elements (26) and words (147) used on the detail page. See FKey WINDOW in Chapter 9 for more information of elements and words.

FKey DETAIL

SUBMENU / COPY /

5) FKEY DETAIL /COPY/ CONCEPTS:

FKey DETAIL and submenu /COPY/ is used for copying geometry as follows:

- Copy geometry **from the front page** to the next available detail page (i.e. front page to detail page)

- Copy geometry **from a detail page** to the next available detail page (i.e. detail page to detail page)

There are two ways to identify the geometry you want to copy:

- SELECT the items on the display screen. They will be highlighted (i.e. change to the highlight color (usually green)) as they are selected.

- Use FKey GROUP and submenu /TRAP/ to form a temporary group prior to beginning the DETAIL /COPY/ operation.

6) REASONS FOR USING FKEY DETAIL /COPY/:

There are several reasons why you would want to copy geometry from a front page, or a detail page to the next available detail page:

1. You have drawn a single item on the front page, and then decide that you want many more identical items on the front page. You would copy the geometry from the front page to the detail page, assign a pivot point, and then return to the front page and place dittos there for all the remaining items.

2. You have a small notch on one of your components and you want a large scale view of this notch for dimensioning and detailing purposes.

   Start an auxiliary view (see FKey AUXVIEW in Chapter 25) and give it an auxiliary view scale of 4 or 5 (i.e. the picture is 4 or 5 times life size....but the geometry is still life size).

   Return to the view with the notch and use FKey DETAIL and /COPY/ (and perhaps with FKey GROUP and /TRAP/) to copy the notch geometry from the front page to the next available detail page.

Return to the front page (FKey DETAIL /RTN/) and make active the auxiliary view you just created for the notch detailing.

Place a USE onto this auxiliary view. All of the original notch geometry is now copied into this view and is ready for dimensioning.

3. You want to extract some of the geometry from your auxiliary view (i.e. perhaps PV) and copy it to another drawing. For example if one designer had created a bracket as part of an assembly, and another designer wanted to use it in his drawing.

   Change to the auxiliary view with the bracket and use FKey DETAIL and /COPY/ (and perhaps with FKey GROUP and /TRAP/) to copy the bracket geometry from the front page to the next available detail page.

   Once the bracket geometry is in the detail page immediately begin the geometry transfer to another drawing (see the section on FKey DETAIL /TRANSFER/ later in this chapter). NOTE: File the drawing prior to beginning the transfer if you have made any changes to it.

4. You want to recreate related views. You may have received a dxf drawing from another CAD system, and all of the geometry has come through in view PV.

   Create as many blank, related auxiliary views as necessary. Use straight lines and points to reference line of direction. (see FKey AUXVIEW in Chapter 25).

   Form groups of each area of geometry (i.e. the geometry that came through as plan view, front view and side view) and copy them to the next available detail page using FKey DETAIL /COPY/ and the /ERS ORIG/ option. For example, this would place the geometry for plan view, front view and side view on detail pages 1, 2 and 3.

   Add pivot points and lever points as required onto the detail pages. Use the same points in all views so that the geometry will align at these points. It is good practice to give all detail pages lever points as the geometry sometimes has to be rotated into order to be aligned properly.

   Return to the front page, make the plan view active, then place a use from the detail page with the plan geometry.

   Repeat this for the other auxiliary views.

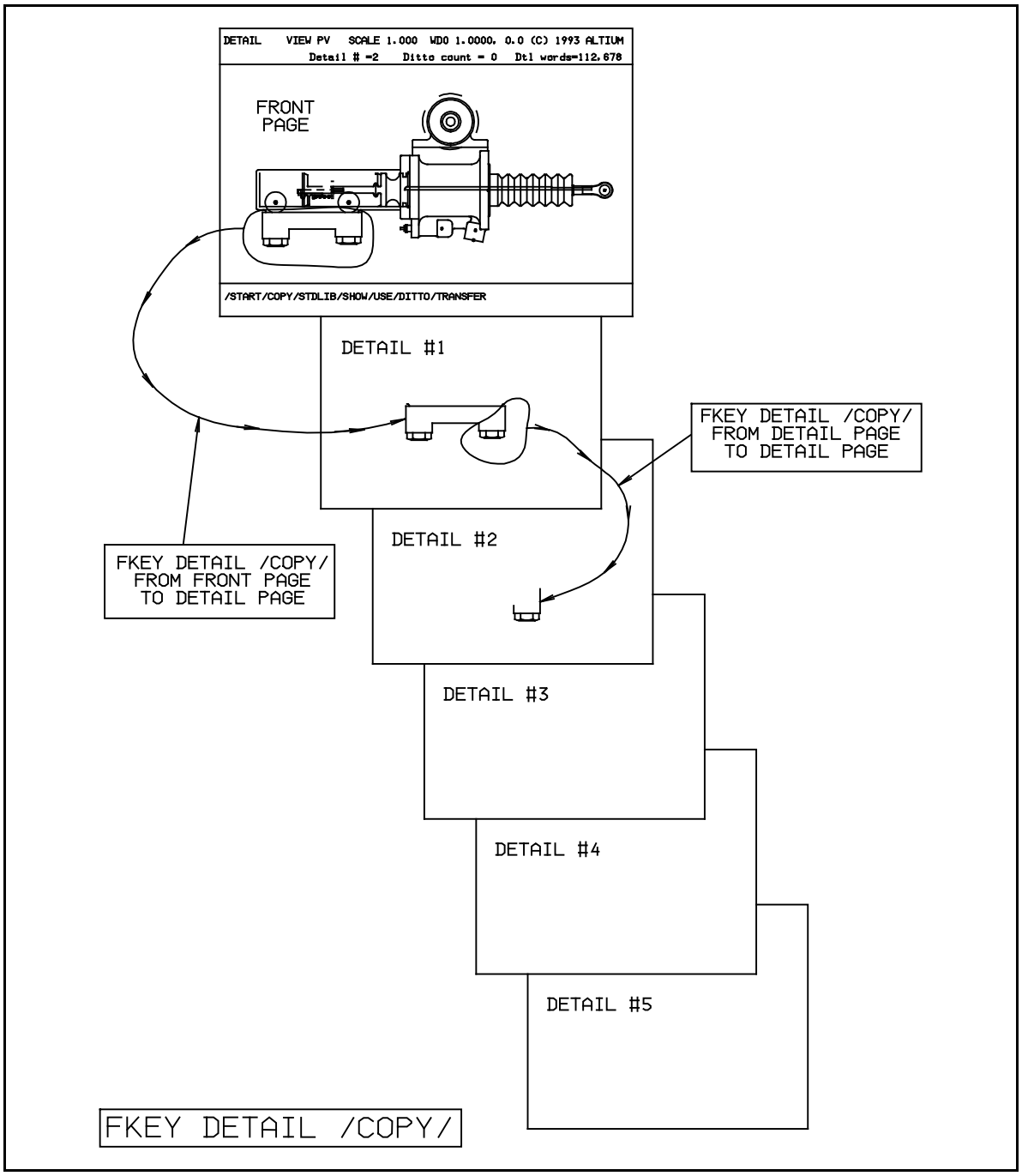

Figure 4 An example of FKey DETAIL /COPY/

Figure 4 on page 26-24 shows FKey DETAIL /COPY/ graphically. As we look at this figure, lets go through the steps required to complete the copy:

7) COPY GEOMETRY FROM THE FRONT PAGE TO A DETAIL PAGE:

NOTE: You are on the front page when you start this procedure.

1. SELECT FKey DETAIL and submenu /COPY/. The menu prompt ***Sel any element / YN end*** appears near the top of the display screen, and the submenu items ***/ADD/*** and ***/KEEP ORIG/*** are underlined by default.

2. SELECT all geometry you want to copy to the detail page. As you select the geometry it highlights (i.e. turns green). Should you want to remove geometry from the elements to be copied because you got the wrong entity (i.e. turn the highlight off), select submenu /SUB/ and select the highlighted elements.

3. When finished selecting elements to be transferred, press the Y/N button on the mouse and all the highlighted elements are copied to the next available detail page (this is detail page #1 in the figure) and the menu prompt ***Sel pivot point*** appears near the top of the screen. (Note: At this point you are on detail page #1).

4. Select a point that will become the pivot point. (Note: If a point is not available, create one by using FKey POINT, then return the FKey DETAIL and submenu /PIVOT/ to select a pivot point).

8) COPY GEOMETRY FROM ONE DETAIL PAGE TO ANOTHER DETAIL PAGE:

NOTE: You are on the detail page when you start this procedure.

1. SELECT FKey DETAIL and submenu /COPY/. The menu prompt ***Sel any element / YN end*** appears near the top of the display screen, and the submenu items ***/ADD/*** and ***/KEEP ORIG/*** are underlined by default.

2. SELECT all geometry you want to copy to the detail page. As you select the geometry it highlights (i.e. turns green). Should you want to remove geometry from the elements to be copied (i.e. turn the highlight off), select submenu /SUB/ and select the highlighted elements.

3. When finished selecting elements to be transferred, press the Y/N button on the mouse and all the highlighted elements are copied to the next available detail page (this is detail page #1 in the figure) and the menu prompt ***Sel ditto / Key detail #*** appears near the top

of the screen. (Note: At this point you are on detail page #2).

4. Select submenu /PIVOT/ the menu prompt ***Sel pivot point*** will appear near the top of the display screen. Select a point that will become the pivot point. (Note: If a point is not available, create one by using FKey POINT, then return the FKey DETAIL and submenu /PIVOT/ to select a pivot point).

Note the following submenu options under FKey DETAIL and submenu /COPY/:

·	/ADD/	All non highlighted elements selected will be added to those about to be copied (i.e. they will be highlighted).
·	/SUB/	All highlighted elements selected will be subtracted from those about to be copied (i.e. they will be de-highlighted and removed from those about to be copied).
·	/KEEP ORIG/	The original geometry will be left where it is.
·	/ERS ORIG/	The original geometry will be erased. This effectively moves geometry to the next detail page.
·	/SHOW/	Shows only those elements about to be copied.
·	/RESET/	Redisplays the all geometry after submenu /SHOW/ has been selected.
·	/ABORT/	Aborts the operation (i.e. cancels it).

FKey DETAIL

SUBMENU / USE /

SUBMENU / DITTO /

9) FKEY DETAIL /USE/ AND /DITTO/ CONCEPTS:

FKey DETAIL submenu /DITTO/ allows you to place *images* of geometry **FROM** the active detail page **TO** the active view on the front page.

FKey DETAIL submenu /USE/ allows you to place *copies* of geometry **FROM** the active detail page **TO** the active view on the front page.

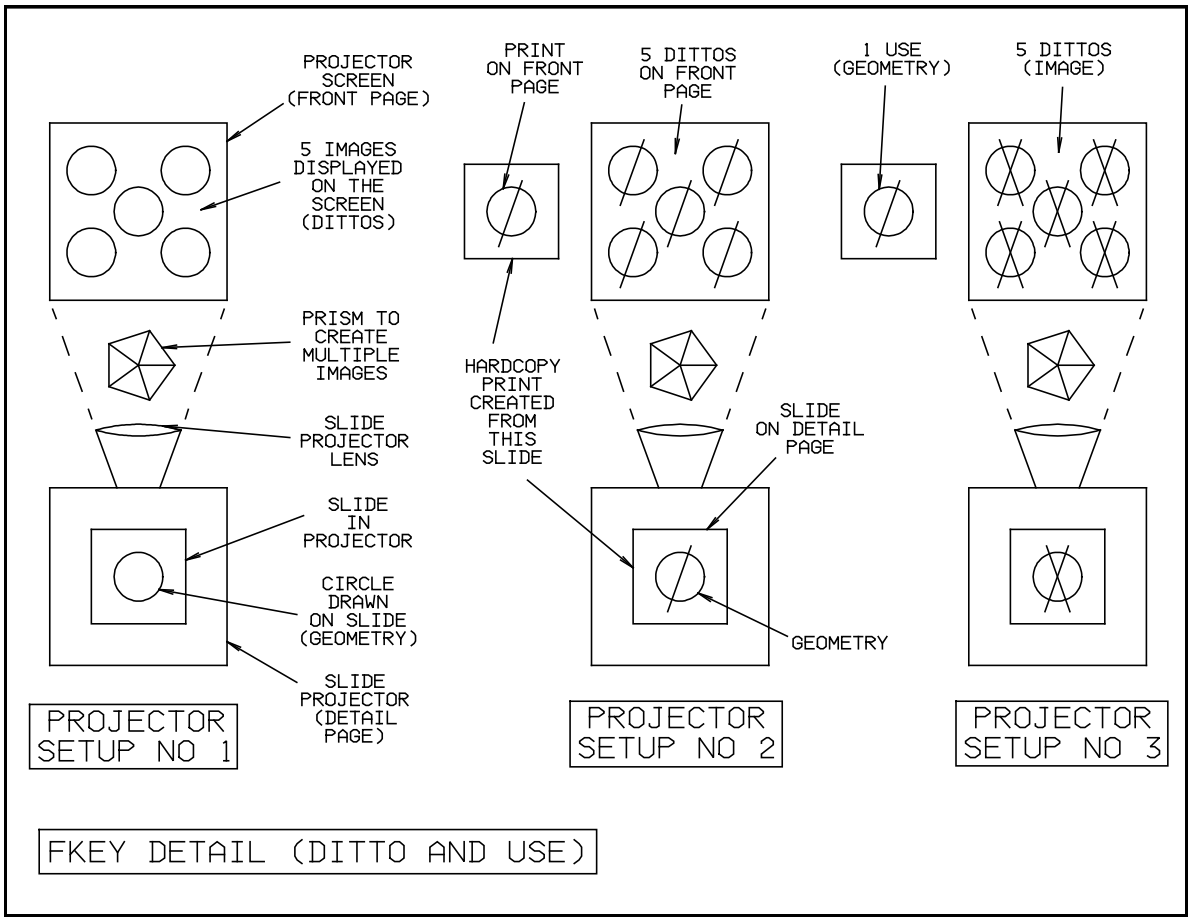

Figure 5 The slide projector analogy for DITTO and USE

An analogy can be used to explain how a ditto and a use work. Refer to Figure 5 on page 26-28. Lets say you have just returned from your vacation. While on your vacation you brought your camera with you and you took a picture of a circle. You are using slide film so after having the film developed, you return home with the slide containing the picture of the circle. You set up your slide projector and screen and invite some friends over to view your slide. So your friends won't be too bored you take an old prism you had laying around, and place it in front of the

projector so that you will have multiple images on the projector screen (5 in this case). The slide projector simulates the detail page, and the projector screen and wall behind it simulate the front page.

PROJECTOR SETUP NO 1, Figure 5 on page 26-28:

You place the slide containing the circle into the projector and turn the projector on. Figure 5 on page 26-28 shows what you would see in PROJECTOR SETUP NO 1. The slide with the circle is in the projector; the projector is turned on; the prism is in front of the projector lens; and five circles are displayed on the projector screen. The five circles displayed on the screen are *images* of the circle on the slide.

PROJECTOR SETUP NO 2, Figure 5 on page 26-28:

While the slide is in the projector, and while the projector is on, you reach inside the projector with a marker and draw a line through the circle on the slide. Figure 5 on page 26-28 shows what you would see in PROJECTOR SETUP NO 2 (ignore the hardcopy print beside the projector screen for now). All of the circles displayed on the projector screen now have lines drawn through them. Each of these 5 circles with a line through them are reflections of the original geometry on the slide in the projector. The slide in the projector *powers* the images on the projector screen.

You now decide that you want to remove the slide from the projector and take it down to your local camera store. You ask them to take the slide (of the circle with a line through it), and make a paper print from it. They have a special 15 minute service, so you quickly return to your home with the slide in one hand, and the paper print in the other hand.

You insert the slide (of the circle with the line through it) back into the projector, and tape the paper print (of the circle with the line through it) onto the wall beside the projector screen. When you turn the projector back on you see PROJECTOR SETUP NO 2 in Figure 5. There are 5 images displayed on the projector screen, and one paper hardcopy taped onto the wall beside the projector screen.

PROJECTOR SETUP NO 3, Figure 5 on page 26-28:

While the slide is in the projector, and while the projector is on, you reach inside the projector with a marker and draw a second line through the circle on the slide. Figure 5 on page 26-28 shows what you would see in PROJECTOR SETUP NO 3. All of the circles displayed on the projector screen now have two lines drawn through them. The hardcopy print still only has one line drawn through it.

The images on the projector screen are reflections of the *original* geometry on the projector slide. Each one is called a **DITTO**.

The hardcopy print originally came from the slide, but is no longer associated with it. It is an exact copy of the original geometry on the detail page. This is called a **USE**.

The projector is called a detail page, and the projector screen and wall beside it are called the front page. You may have up to 63 slide projectors (i.e. detail pages) simultaneously projecting images onto a single projection screen and wall (i.e. front page).

10) MANIPULATING A DITTO:

Because of the way a ditto works, it has some special properties:

- You cannot erase a detail page if dittos (from this page) are displayed on the front page. This would be analogous to removing the slide from the projector, and still expecting the images to be displayed on the projector screen. You must first erase any dittos on the front page and on any detail pages and you will then be able to erase a detail page.

- If you are on the front page and select FKey DETAIL, you may select any ditto, and you will be placed in the detail page where the original geometry is located. This happens because each ditto "knows" which detail page the original geometry is located on. This can be especially valuable when you have dozens of detail pages and it becomes harder to keep track of which ditto belongs to which detail page.

- Each ditto placed on the front page uses only 7 words of model memory, regardless of the complexity of the original geometry on the detail page. This can be a major saving in model space should you have multiple images where dittos can be used instead of geometry.

- When you change the geometry on a detail page, all dittos used from that page are instantly updated.

- Because a ditto is an image, you cannot select any part of it to connect geometry to it as you create your drawing. You may, however, define points (i.e. FKey POINT and submenu /DEF PTS/) on the ditto and any points existing on the original detail page will be passed through to the ditto on the front page. Should

you need points where none are located, go to the detail page where the original geometry is located, create points as needed and then return to the front page and define points on the ditto.

- You can *explode* a ditto into geometry (i.e. convert it into a USE). Select FKey ELECTRICAL, submenu /SCHEMATICS/, submenu /UTILS/, and submenu /DITTO REPL/ (i.e. ditto replace). Now select an existing ditto.

  The menu prompt ***Select ditto to replace / YN group*** appears near the top of the page. Select an existing ditto (or press the Y/N button on the mouse should you have a temporary group).

  The menu prompt will now change to ***Select ditto to replace / YN convert***. Continue selecting ditto(s) or press the Y/N button on your mouse to convert the ditto to geometry.

  Once you press the Y/N button on the mouse, the ditto(s) will be converted and the menu prompt will now change to ***Select ditto to replace / YN restore***. Select another ditto to repeat the process or press the Y/N button on the mouse to restore the geometry back to a ditto.

11) THE PIVOT POINT:

Each detail page has a special location called a pivot point. Refer to Figure 6 on page 26-32 for a graphic depicting the pivot point.

The pivot point is used as an attachment point when a ditto is used, transferred, copied, or dittoed onto a view (i.e. the front page) or another detail page. It can be thought of as a thumb tack pushed through the detail page (or transparency containing the geometry) at a specific spot. When the detail page is placed on the front page (or on another detail page) as a use or a ditto, the thumb tack is aligned with the point selected or indicated, and the entire detail page is loaded on top of the thumb tack (i.e. pivot point). For example in Figure 6 on page 26-32 the porshe wheel (on detail page #4) has a pivot point through the center of the wheel. When dittos are placed on the front page, the insertion points for the wheel ditto are selected. The thumb tack locates the detail page with the wheel on top of the insertion points.

Every detail page has a pivot point. If you do not define one yourself, the origin (i.e. 0,0) of the detail page becomes the default pivot point. You may change the pivot point by selecting FKey DETAIL and submenu /PIVOT/ and then selecting another point that will become the new pivot point. **Caution: Changing the pivot point will realign your dittos on the front page!**

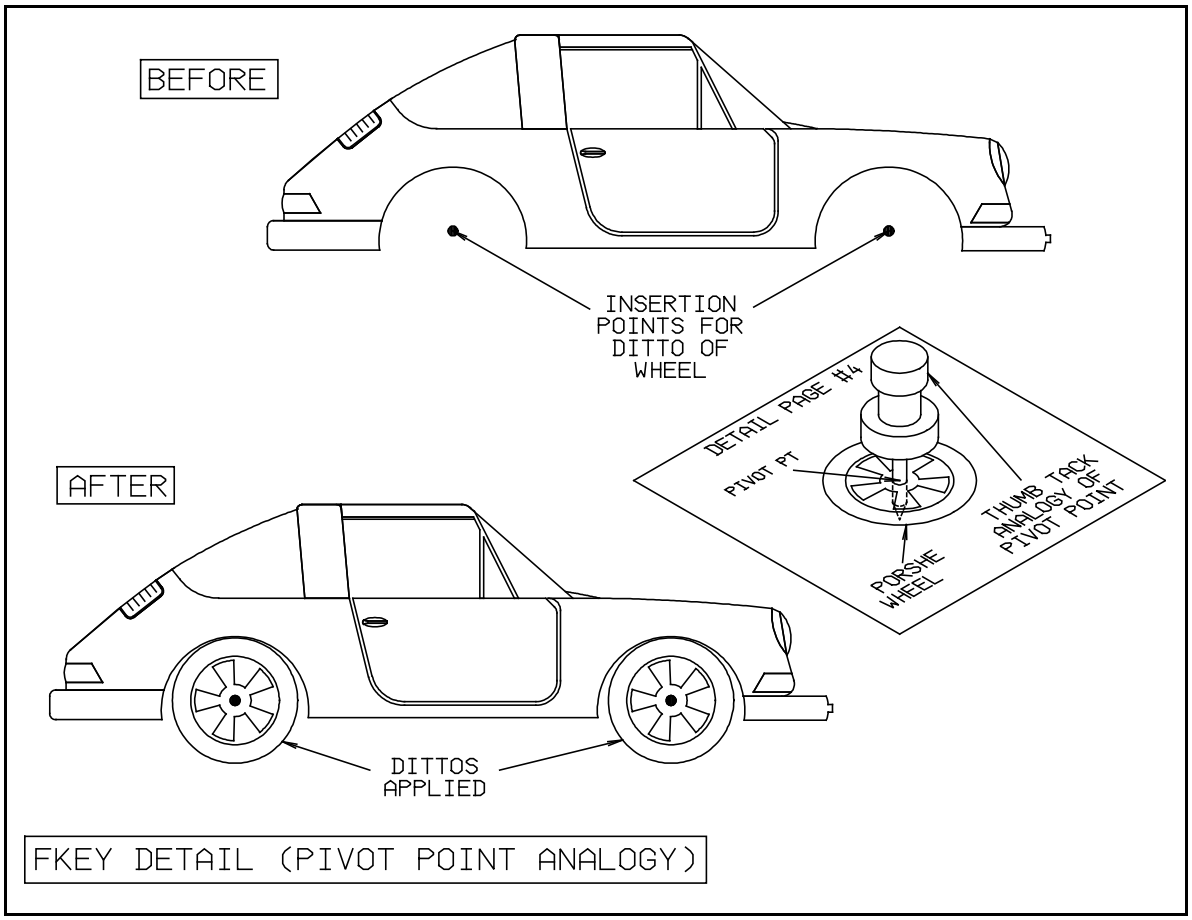

Figure 6 An example of a pivot point on a detail page

12) THE LEVER POINT:

A lever point is used to rotate a detail as it is placed onto a view or detail page as a use or a ditto. Every detail page has a pivot point, but the lever point is optional. If a detail page does not have a lever point, you cannot rotate the ditto or use as it is placed onto the front page (or onto another detail page).

The lever point is established by selecting FKey DETAIL and submenu /LEVER/ and then selecting an existing point. The selected point becomes the lever point.

When the lever point is established, an imaginary line is drawn from the pivot point to the lever point. This line is at a zero reference angle and is used as a lever arm for rotating the detail as it is used or dittoed onto a view or another detail page. Please see Figure 7 on page 26-33 for a graphic depicting a lever point.

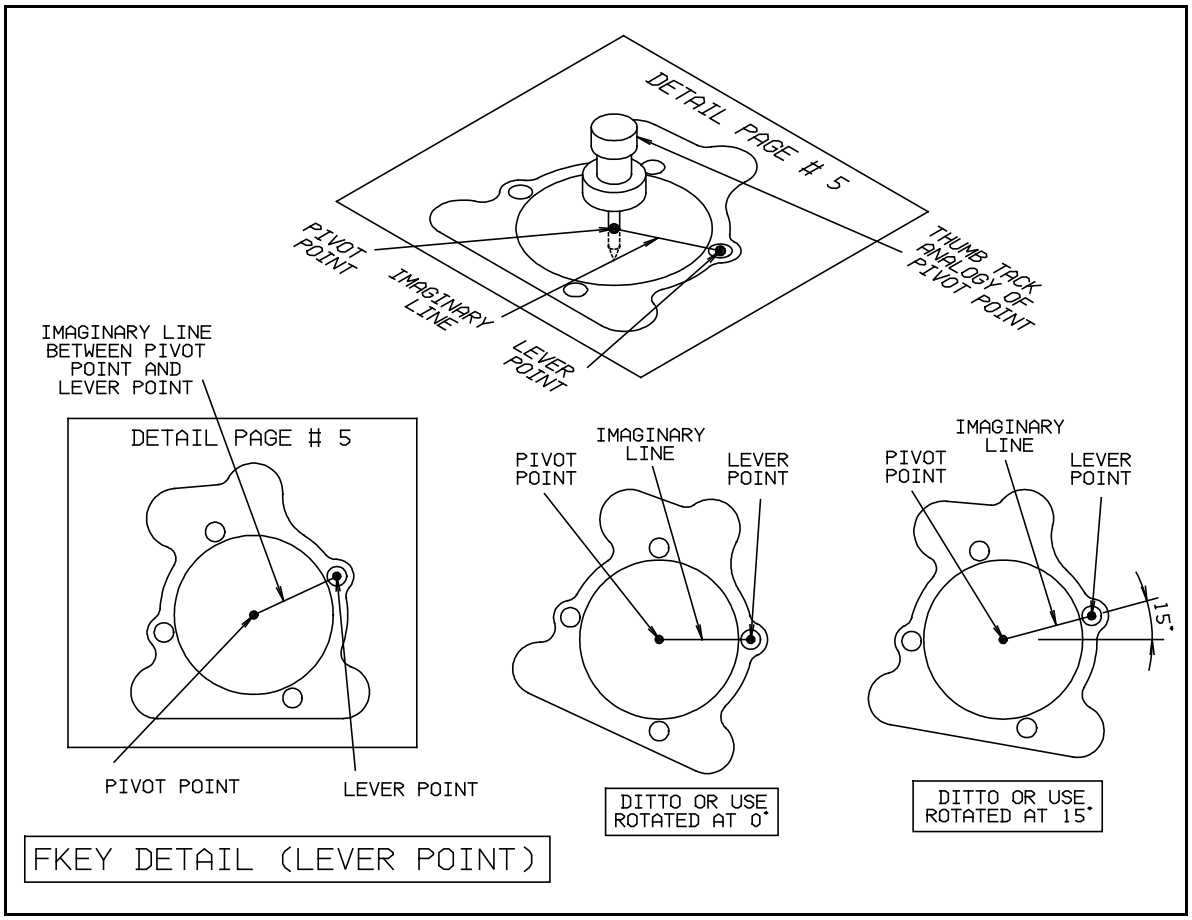

Figure 7 An example showing the lever point.

Should you have a lever point defined on a detail page, and want to remove the lever point definition, access the detail page and erase the lever point. When the lever point is erased, the lever point definition is also erased.

13) PLACING A USE OR DITTO IN YOUR DRAWING:

There are two places where a use or ditto can be placed in your drawing.

If you are on the front page in any view (i.e. the word ***View*** appears near the top of the screen), then a use or ditto will be added to your drawing in whatever view you are currently in. When you are on the front page and select FKey DETAIL the submenu items /USE/ and /DITTO/ will appear. These submenu items place a use or ditto into your current view on the front page.

If you are on a detail page (i.e. the word ***Detail*** appears near the top of the screen), then a use or ditto will be added to your current detail page. When you are on the detail page and select FKey DETAIL the submenu items /USE/ and /DITTO/ will appear. These submenu items place a use or ditto onto your current detail page.

14) EXAMPLE - PLACING A USE IN YOUR DRAWING:

To place a USE in your drawing, follow these steps:

1. SELECT FKey DETAIL.

2. The submenus appear.

   a. The submenu ***/START / COPY / STDLIB / SHOW / USE / DITTO / TRANSFER/*** will appear if you are on the front page when you select FKey DETAIL.

   b. The submenu ***/ FWD / BACK / PIVOT / LEVER / USE / DITTO / RESET / COPY / ERASE / TRANSFER / RTN /*** will appear if you are on a detail page when you first select FKey DETAIL.

3. Select submenu /USE/.

4. The menu prompts appear.

   a. **If you are on the front page** the menu prompt ***Key X,Y / Sel pivot / Ind pivot / YN key det #*** appears near the top of the screen.

      Note that information is displayed about the current active detail page. For example the information line near the top of the page will display ***Detail # = 5 Ditto count = 4 Dtl words = 26, 147***. This means that the active detail page is #5; detail page 5 has been dittoed 4 times; and detail page #5 uses 26 elements and 147 words.

   b. **If you are on the detail page** the menu prompt ***Key detail = 6*** (or some other number) will appear. Key in the detail page that you want to use, or press the Y/N button on your mouse to accept the displayed page.

The menu prompt ***Key X,Y / Sel pivot / Ind pivot / YN key det #*** now appears near the top of the screen.

Note that information is displayed about the current active detail page. For example the information line near the top of the page will display ***Detail # = 18 Ditto count = 11 Dtl words = 489, 2349***. This means that the active detail page is #18; detail page 18 has been dittoed 11 times; and detail page #18 uses 489 elements and 2349 words.

5. OPTIONAL: Press the Y/N button on the mouse and key the number of the detail page that you want to use.

6. Key the X,Y coordinates of the pivot point, select the pivot point, or indicate the pivot point.

7. If the detail page has no lever point, the use will now appear and the menu prompt will change to read ***Key X,Y / Sel point / Ind pivot / YN erase***.

8. If the detail page has a lever point, an additional menu prompt ***Sel element / Key angle = 15.000*** (or some other value) will appear near the top of the display screen. You must key in the angle that the use will be rotated to. You may also select an element that defines the angle. (A line at 45 deg angle for example.) After defining the angle, the use appears and the menu prompt changes to read ***Key X,Y / Sel point / Ind pivot / YN erase***.

15) EXAMPLE - PLACING A DITTO IN YOUR DRAWING:

To place a DITTO in your drawing, follow these steps:

1. SELECT FKey DETAIL.

2. The submenus appear.

   a. The submenu ***/START / COPY / STDLIB / SHOW / USE / DITTO / TRANSFER/*** will appear if you are on the front page when you select FKey DETAIL.

   b. The submenu ***/ FWD / BACK / PIVOT / LEVER / USE / DITTO / RESET / COPY / ERASE / TRANSFER / RTN /*** will appear if you are on a detail page

when you first select FKey DETAIL.

3. Select submenu /DITTO/.

4. The menu prompts appear.

   a. If you are on the front page the menu prompt ***Key X,Y / Sel pivot / Ind pivot / YN key det #*** appears near the top of the screen.

      Note that information is displayed about the current active detail page. For example the information line near the top of the page will display ***Detail # = 23 Ditto count = 1 Dtl words = 58, 672***. This means that the active detail page is #23; detail page 23 has been dittoed 1 time; and detail page #23 uses 58 elements and 672 words.

   b. If you are on the detail page the menu prompt ***Key detail = 11*** (or some other number) will appear. Key in the detail page that you want to use, or press the Y/N button on your mouse to accept the displayed page.

      The menu prompt ***Key X,Y / Sel pivot / Ind pivot / YN key det #*** now appears near the top of the screen.

      Note that information is displayed about the current active detail page. For example the information line near the top of the page may display ***Detail # = 18 Ditto count = 11 Dtl words = 489, 2349***. This means that the active detail page is #18; detail page 18 has been dittoed 11 times; and detail page #18 uses 489 elements and 2349 words.

5. OPTIONAL: Press the Y/N button on the mouse and key the number of the detail page that you want to use.

6. OPTIONAL: Define the fill parameters for the ditto. The options are:

   a. /NORMAL/ (i.e. not filled)

   b. /FILL/ (i.e. solid fill with alternating boundaries)

   c. /HATCH/ (i.e. 45 degree or 135 degree cross hatching). Press the Y/N button on the mouse to toggle between the 45 degree and 135 degree cross hatching.

NOTE THAT TO ACTIVATE THE FILL OPTIONS YOU MUST TOGGLE INTO THE FILL OPTION, AND THEN TOGGLE OUT AGAIN. For example, to activate the /FILL/ option, select submenu /FILL/ and then immediately select /DITTO/ again.

7. Key the X,Y coordinates of the pivot point, select or indicate the pivot point.

8. If the detail page has no lever point, the ditto will now appear and the menu prompt will change to read ***Key X,Y / Sel point / Ind pivot / YN erase***.

9. If the detail page has a lever point, an additional menu prompt ***Sel element / Key angle = 15.000*** (or some other angle) will appear near the top of the display screen. You must key in the angle that the ditto will be rotated to, or press the Y/N button on the mouse to accept the displayed angle. You may also select an element that defines the angle (for example a point or a line). After defining the angle, the use appears and the menu prompt changes to read ***Key X,Y / Sel point / Ind pivot / YN erase***.

16) NORMAL, FILLED AND CROSS HATCHED DITTOS:

All dittos can be placed into a drawing as normal, filled or cross hatched. These are attributes attached to the ditto that determine the way it fills. Lets take a look at Figure 8 on page 26-38 to see some examples of various types of dittos. There are four dittos displayed with different types of fill conditions.

The ditto labelled "NORMAL DITTO" is the way a ditto will display with the /NORMAL/ condition (i.e. without any fill condition).

The ditto labelled "FILLED DITTO" shows the same ditto displayed with the /FILL/ option.

The ditto labelled "CROSS HATCHED DITTO (135°)" shows the same ditto displayed with the /HATCH/ option and the 135° angle.

The ditto labelled "CROSS HATCHED DITTO (45°)" shows the same ditto displayed with the /HATCH/ option and the 45° angle.

Notice that when a fill or cross hatch condition is applied to a ditto, is applied to alternate boundaries. Each boundary must be continuous (i.e. no holes in it). MICRO CADAM fills from left to right, so this must also be taken into account when constructing filled or cross hatched dittos.

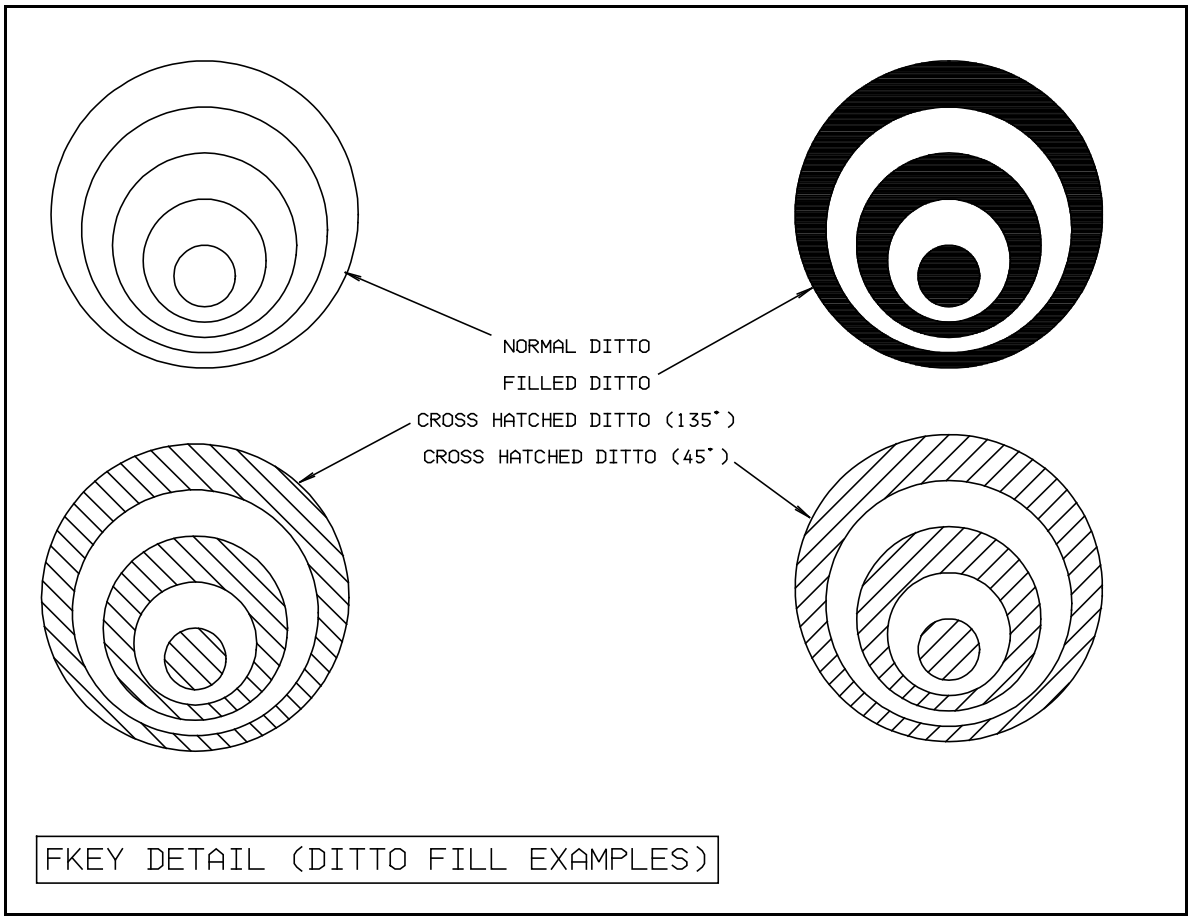

Figure 8 Examples of ditto fill options

17) USING A CROSS HATCHED DITTO TO PLACE AN AREAFILL ONTO A DRAWING:

To place an area fill onto the front page of a drawing, follow the following steps:

1. Copy to the detail page all of the geometry defining the area fill. Use FKey DETAIL and submenu /COPY/ to copy all geometry defining the area fill to the next available detail page. This is shown in Figure 9 on page 26-39. (Use FKey GROUP and /TRAP/ if necessary to form a temporary group prior to copying the geometry.)

2. Define the pivot point on the detail page such that it will load correctly onto the geometry on the front page.

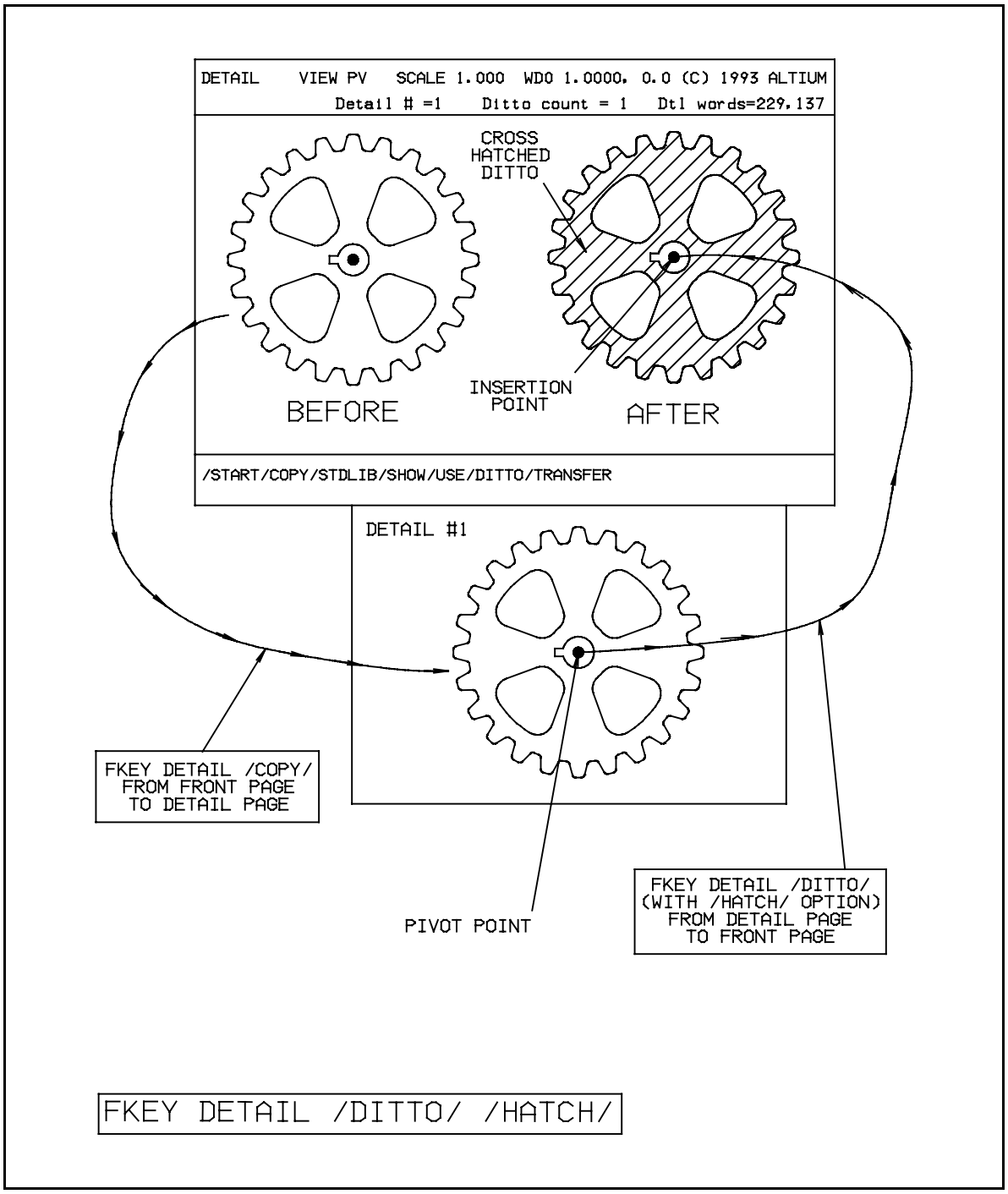

Figure 9 An example showing how to place an area fill onto the front page

3. Clean up the geometry on the detail page. Make sure that all boundaries are continuous, and erase all unnecessary elements.

4. Return to the front page and place a cross hatched ditto on top of the original geometry. The original geometry on the front page now has a cross hatched ditto placed on top of it. To apply the cross hatched ditto, follow these steps:

    a. Select FKey DETAIL. The submenu appears near the bottom of the screen and /DITTO/ is underlined by default.

    b. Select /HATCH/ on the submenu.

    c. Select /DITTO/ on the submenu.

    d. Select the location for the cross hatched ditto to be placed.

5. A cross hatched ditto is on top of the original geometry.

NOTE: THIS IS THE ONLY WAY TO GET AN AREAFILL IN MICRO CADAM CORNERSTONE!

FKey DETAIL

ADVANCED

SECTION

FKey DETAIL

SUBMENU / TRANSFER /

18) FKEY DETAIL /TRANSFER/ CONCEPTS:

FKey DETAIL and submenu /TRANSFER/ allows you to transfer geometry two different ways:

- **FROM A VIEW TO A DETAIL PAGE:** Transfer all geometry in the current active view on your present drawing to the next available detail page on another drawing.

- **FROM A DETAIL PAGE TO A DETAIL PAGE:** Transfer all geometry in the current detail page on your present drawing to the next available detail page on another drawing.

Note that these two transfers occur ***between*** two different drawings (i.e. **FROM** drawing No. 1 **TO** drawing No. 2.

If you are on the front page on drawing No. 1 (i.e. the word ***View*** is present near the top of the display screen) when you select FKey DETAIL, the submenu has a /TRANSFER/ option available. If you select this /TRANSFER/ option ***while on the front page***, then the entire active view will be transferred to another drawing (i.e. drawing No. 2).

If you are on a detail page on drawing No. 1 (i.e. the word ***Detail*** is present near the top of the display screen) when you select FKey DETAIL, the submenu has a /TRANSFER/ option available. If you select this /TRANSFER/ option ***while on the detail page***, then the entire detail page will be transferred to another drawing (i.e. drawing No. 2).

Note that the result of the /TRANSFER/ option depends on where you start it from. If you start from the front page, then you are transferring your entire active view to another drawing. If you start from a detail page, then you are transferring your entire detail page to another drawing.

Figure 10 on page 26-45 shows the two ways FKey DETAIL /TRANSFER/ works. Let's take a look at Figure 10 in more detail at how the transfer mechanism works:

19) TO TRANSFER AN ENTIRE VIEW FROM DRAWING NO. 1 TO A DETAIL PAGE ON DRAWING NO. 2:

1. CALL drawing No. 1 onto your display screen and make active the view you want to transfer (i.e. select FKey GROUP and submenu /CHOOSE/ and select any element in the view you want active). Note that the word ***View*** is visible near the top of the screen.

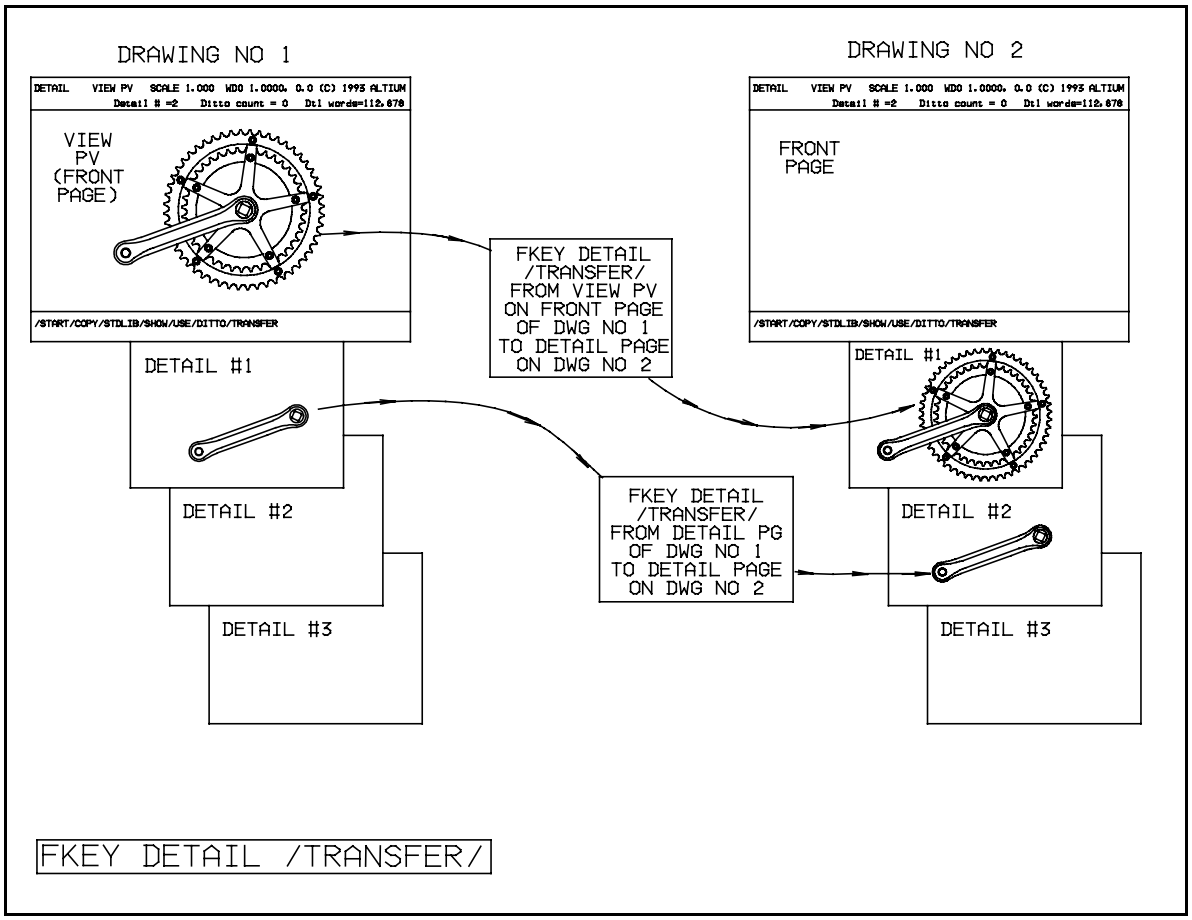

Figure 10 Examples of FKey DETAIL /TRANSFER/

2. Select FKey DETAIL and submenu /TRANSFER/. The menu prompt ***Use YN*** appears near the top of the display screen. MICRO CADAM wants you to press the Y/N button on your mouse to confirm that you want to proceed with the transfer of the view. The reason for this verification is that once you begin a transfer, you cannot abort it; you must finish the transfer, and you cannot use any other function until you finish it.

3. Press the Y/N button on your mouse. This confirms that you want to proceed with the transfer. The menu prompt changes to ***Key filename / YN call***. MICRO CADAM wants to know *where* the view is being transferred to.

4. Key in the name of the drawing that the view is being transferred to, or press the Y/N button on your mouse to display a list of drawing names, and select the name of the drawing that the view is being transferred to. Once MICRO CADAM knows where the view is being transferred to, it completes the transfer. What really happens is that the

auxiliary view from drawing No. 1 is kept in memory; the rest of drawing No. 1 is erased; drawing No. 2 is called into memory; and the auxiliary view from drawing No. 1 is inserted into the next available detail page in drawing No. 2.

Note that when you first start the transfer, you are on an auxiliary view on drawing No. 1. When you finish the transfer, you are on a detail page on drawing No. 2.

5. You may now proceed to define a pivot point (and optional lever point) for the auxiliary view just transferred. This detail page can now be *dittoed* or *used*.

20) TO TRANSFER A DETAIL PAGE FROM DRAWING NO. 1 TO A DETAIL PAGE ON DRAWING NO. 2:

(NOTE: Remember to FILE Dwg #1 before you /TRANSFER/ if you made changes to DWG #1 that you want to keep!)

1. CALL drawing No. 1 onto your display screen. Go to the detail page that you want to transfer (i.e. select FKey DETAIL and submenu /SHOW/ and /FWD/ /BACK/ until you have found the right detail page). Note that the word ***Detail*** is visible near the top of the screen.

2. Select submenu /TRANSFER/. The menu prompt ***Use YN*** appears near the top of the display screen. MICRO CADAM wants you to press the Y/N button on your mouse to confirm that you want to proceed with the transfer of the detail page. The reason for this verification is that once you begin a transfer, you cannot abort it; you must finish the transfer, and you cannot use any other function until you finish it.

3. Press the Y/N button on your mouse. This confirms that you want to proceed with the transfer. The menu prompt changes to ***Key filename / YN call***. MICRO CADAM wants to know *where* the detail page is being transferred to. (TIP: Transfer back into Dwg #1 if you inadvertently pressed the Y/N button!)

4. Key in the name of the drawing that the view is being transferred to, or press the Y/N button on your mouse to display a list of drawing names, and select the name of the drawing that the detail page is being transferred to. Once MICRO CADAM knows where the detail page is being transferred to, it completes the transfer. What really happens is that the detail page from drawing No. 1 is kept in memory; the rest of drawing No. 1 is erased; drawing No. 2 is called into memory; and the detail page from drawing No. 1 is inserted into the next available detail page in drawing No. 2.

Note that when you first start the transfer, you are on a detail page on drawing No. 1. When you finish the transfer, you are on a detail page on drawing No. 2.

5. You may now proceed to define a pivot point (and optional lever point) for the auxiliary view just transferred. This detail page can now be dittoed or used.

21) TO TRANSFER PART OF A VIEW (I.E. SELECTED GEOMETRY) FROM DRAWING NO. 1 TO A DETAIL PAGE ON DRAWING NO. 2:

NOTE: This option may happen quite frequently. Usually you determine that you need some geometry (i.e. not the entire view) from drawing No 1 to be copied to drawing No 2.

Figure 11 on page 26-48 shows how FKey DETAIL /COPY/ and /TRANSFER/ can be used together to move selected geometry from one drawing to another. The individual steps required are listed as follows:

1. CALL drawing No. 1 onto your display screen. Go to the front page and make active the view with the required geometry (i.e. use FKey AUXVIEW /CHOOSE/).

2. Copy the required geometry to the next available detail page in drawing No. 1. (i.e. use FKey DETAIL /COPY/ ... note that you may trap the geometry into a temporary group (i.e. FKey GROUP /TRAP/) before copying the geometry to the detail page). Notice that the word ***Detail*** is visible near the top of the screen once you finish copying the geometry (you are now on a detail page).

3. Select submenu /TRANSFER/ (you are still in FKey DETAIL after copying the geometry from the front page). (Note that it is not necessary to file the drawing before completing the transfer! Only file if you have added something to the drawing that you want to keep!). The menu prompt ***Use YN*** appears near the top of the display screen. MICRO CADAM wants you to press the Y/N button on your mouse to confirm that you want to proceed with the transfer of the detail page. The reason for this verification is that once you begin a transfer, you cannot abort it; you must finish the transfer, and you cannot use any other function until you finish it.

4. Press the Y/N button on your mouse. This confirms that you want to proceed with the transfer. The menu prompt changes to ***Key filename / YN call***. MICRO CADAM wants to know *where* the detail page is being transferred to.

5. Key in the name of the drawing that the view is being transferred to, or press the Y/N

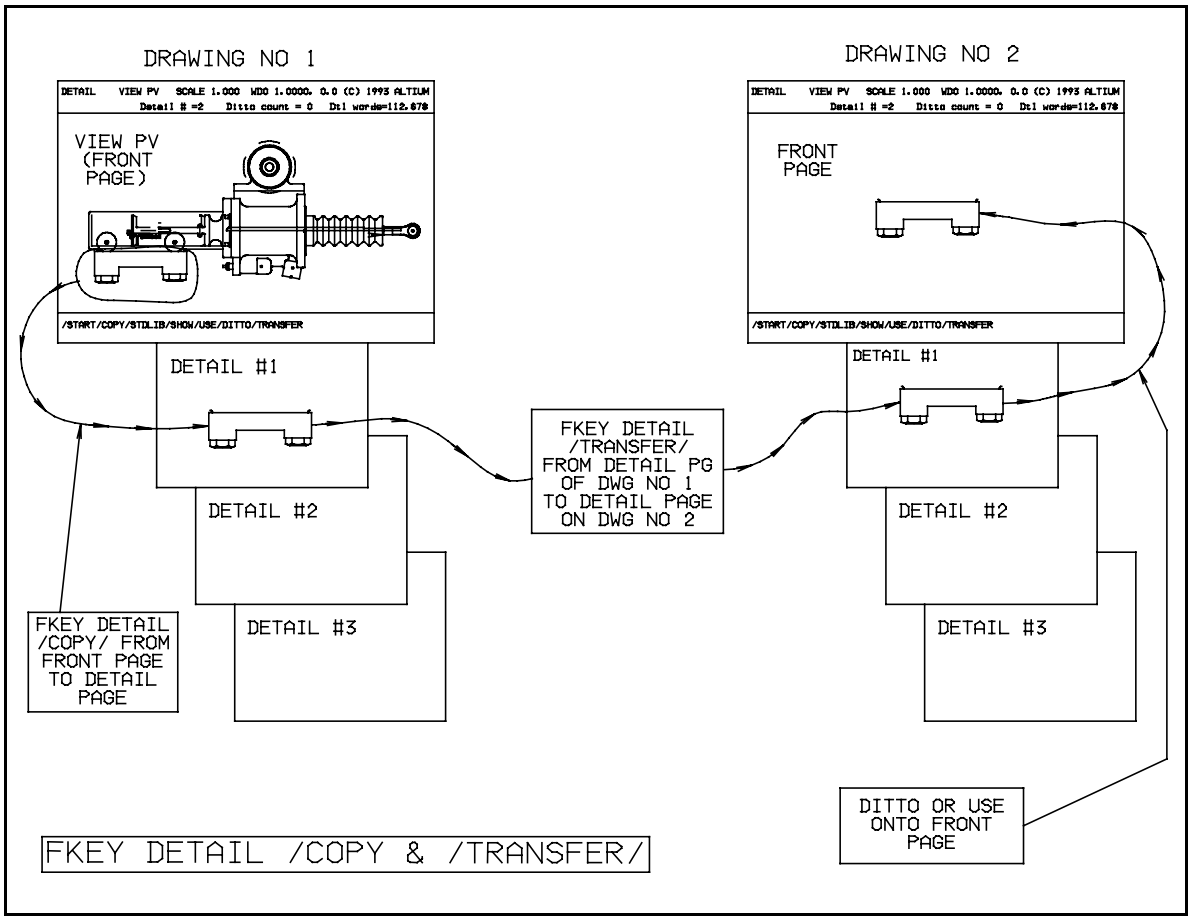

Figure 11 Examples of FKey DETAIL /TRANSFER/ and /COPY/

button on your mouse to display a list of drawing names, and select the name of the drawing that the detail page is being transferred to. Once MICRO CADAM knows where the detail page is being transferred to, it completes the transfer. What really happens is that the detail page from drawing No. 1 is kept in memory; the rest of drawing No. 1 is erased; drawing No. 2 is called into memory; and the detail page from drawing No. 1 is inserted into the next available detail page in drawing No. 2.

Note that when you first start the transfer, you are on a detail page on drawing No. 1. When you finish the transfer, you are on a detail page on drawing No. 2.

6. You may now proceed to define a pivot point (and optional lever point) for the auxiliary view just transferred. This detail page can now be dittoed or used into the active view on the front page.

FKey DETAIL

SUBMENU / STDLIB /

22) FKEY DETAIL /STDLIB/ CONCEPTS:

FKey STDLIB is used to access libraries of commonly used components, and to place copies of these components into your drawing.

MICRO CADAM stores its models in groups and users (see Chapter 6 on CONCEPTS). A group name can contain up to 4 characters and a user name up to 6 characters. You can use any group and user names you want, except for two exceptions where the names are reserved. These two exceptions are shown in the chart below:

GROUP	USER
SYS	SYMBOL
*	STDLIB

SYS,SYMBOL is a reserved group and user name. This is where special symbols are stored (see the chapter on FKey SYMBOL).

STDLIB is a reserved user name. The group name can be any 4 character name, but the user name *STDLIB* in that group is a special place where standard library drawings are kept.

A standard library drawing is a normal MICRO CADAM drawing that is stored in a special place ... a user named STDLIB. Being stored in user STDLIB makes the normal MICRO CADAM drawing available to FKey DETAIL and submenu /STDLIB/.

To access standard library drawings select FKey DETAIL and submenu /STDLIB/. The menu prompt ***Key filename*** will appear near the top of the display screen. MICRO CADAM is asking for the name of the drawing, located in user STDLIB, that you want to access. KEY hex,mc (or whatever stdlib drawing you want to access).

> NOTE: Since you must key in a model name each time you want to access the standard library, do not use long names when storing the models there. Use, for example, *HEX,MC*, *CPLG,1* or *BRG,SPH*.

The menu prompt will now change to ***Key detail #***. MICRO CADAM is now asking for the number of the detail page, of the drawing in user stdlib, that you want copied into the next available detail page of your existing drawing. Once you key in the detail page number, that detail page is copied into your existing drawing.

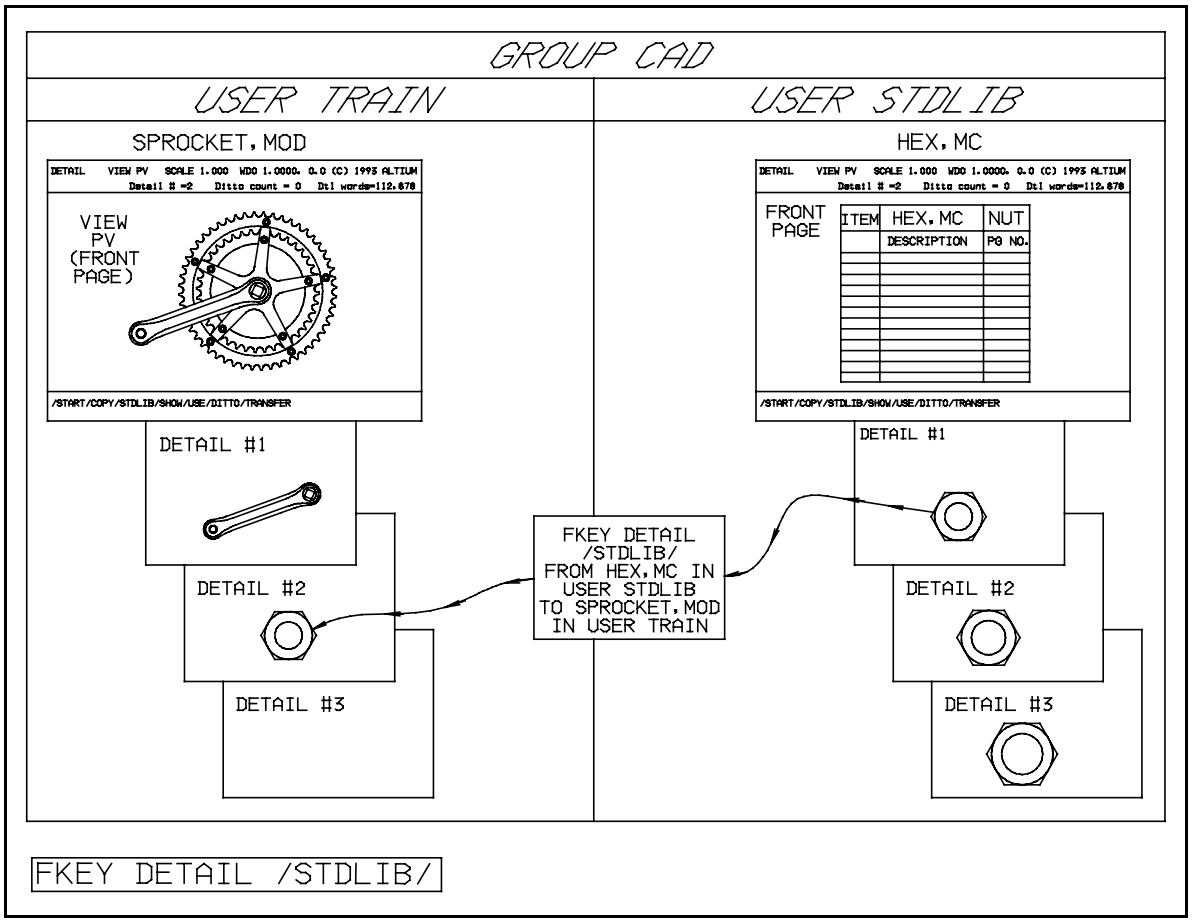

Figure 12 An example of Standard Library usage

This procedure is shown in Figure 12 on page 26-51.

Notice that in Figure 12 the standard library drawing HEX,MC has an information sheet located on the front page of the drawing, and different size nuts drawn on each of the detail pages. Only the detail pages in the standard library drawing are accessed through the FKey DETAIL /STDLIB/ option.

The information sheet on the front page contains a list of detail pages and descriptions of the geometry drawn on each of those detail pages. This information sheet is plotted onto a piece of paper and inserted into a '*standard library book*'. This paper book would normally be subdivided into sections such as *NUTS*, *BOLTS*, *WASHERS*, *MOTORS*, *COUPLINGS*, *SPHERICAL BEARING*, *TAPER ROLLER BEARINGS*, *CHAIRS*, *DESKS*, etc. Each section would contain an information sheet plotted from the front page of the original standard library drawing. For example the section on *NUTS* could have *NUT,IMP* for imperial hex nuts and

NUT,MET for metric hex nuts. Thousands of standard library drawings can be available (this is limited only by hard disk space). Two examples of standard library information sheets are shown in Figure 13 on page 26-55 and Figure 14 on page 26-56.

23) CREATING YOUR OWN STANDARD LIBRARY:

To create your own standard library drawings follow these instructions:

1. Change to the user *STDLIB* in whatever group you are in. For example, if you are in group CAD, then select FKey FILE and submenu /USER/ and key *CAD,STDLIB*.

2. Start a new drawing. For example lets say you want you want to create a standard library of the spherical roller bearings that you frequently use. Select FKey FILE and submenu /START/ and key in the drawing name *BRG,SPH*. A new drawing is started.

3. File the drawing with the new name. Select FKey FILE and submenu /FILE/. Should the menu prompt ***YN create user*** appear near the top of the display screen this means that the user STDLIB does not yet exist on your computer; press the Y/N button on your mouse to create the user. The message ***Drawing filed*** should now appear near the top of the display screen.

4. Start a new detail page and begin creating the geometry on that page. Select FKey DETAIL and submenu /START/. (Notice that the word ***View*** is present when you are on the front page and ***Detail*** is present when you are on a detail page.) You will be placed on the next available detail page (which happens to be detail page #1 since this is a new blank drawing). Draw the bearing on this detail page. When you are finished drawing the bearing, give it a pivot point, and a lever point if necessary.

   Should you wish to create the bearing drawings using related views, follow these steps:

   i. After starting the new drawing, draw the plan view of the bearing in view PV. NOTE: Stay in "View" on Front Page of drawing, not on a detail page.

   ii. After view PV is finished, create an orthographic view called FV to give an elevation view of the bearing.

   iii. After PV and FV are finished, you may create an end view called EV. (Note: The bearing used for this example only requires the first two views, but motors, chairs, desks and other items may require 3 views).

iv. After all the views have been drawn, change to View PV and trap all geometry in that view into a temporary group using FKey GROUP /TRAP/ /TRAPOUT/.

v. Once you have a temporary group, copy all of the geometry to the next available detail page using FKey DETAIL /COPY/ /ERS ORIG/. Note that the /ERS ORIG/ erases the all geometry in the view after copying it to the next available detail page. This effectively ***moves*** the geometry **from** the front page **to** the detail page.

vi. Repeat items iv and v for all other views. You should now have view PV of the bearing in detail page #1, and FV in detail page #2.

vii. Repeat items i to vi for all other bearings. Remember you are allowed a maximum of 63 detail pages - (the number of views used).

5. Once all the geometry has been created on the detail pages, create an information sheet on view PV on the front page. Make the boundaries of this sheet 8½ x 11 so it will fit into your standard library book after plotting. See Figure 13 on page 26-55 and Figure 14 on page 26-56 for examples of information sheets.

   Notice that the information sheet contains all the information you need to access your standard library item. The name of the standard library drawing is listed; each of the detail pages are listed with descriptions of the geometry on them; the orientation (i.e. which view they belong to) can be included; pivot points are shown; and lever points are shown.

24) ACQUIRING STANDARD LIBRARIES:

Standard libraries can be acquired many different ways:

- Standard libraries are available for purchase from ALTIUM INC.

- Standard libraries are available for purchase from companies that specialize in the creation of standard libraries.

- Many manufacturers will provide you with standard libraries of their products at little or no charge. Ask for copies of their standard libraries in MICRO CADAM format. If they are not available, then ask for DXF format. The DXF format standard library drawings can be converted into MICRO CADAM format with the DXF translator (see the chapter UTILITIES for more information on the MICRO

CADAM DXF translator).

- Should the standard libraries be available in Mainframe CADAM or Professional CADAM format, you should ask for the standard libraries in NURESTOR format. NURESTOR format is a CADAM neutral format by which CADAM drawings can be sent between the three levels of CADAM (MICRO CADAM, Mainframe CADAM and Professional CADAM). You will need to purchase the Micro CADAM Data Transfer program from ALTIUM INC. to complete the translation of the programs from NURESTOR format into MICRO CADAM format.

25) USING THE STANDARD LIBRARY TO FACILITATE THE TRANSFER OF MULTIPLE DETAIL PAGES FROM ONE DRAWING TO ANOTHER:

There are times when you want to transfer multiple detail pages from one drawing (lets say drawing No. 1) to another drawing (lets say drawing No. 2). Normally you would have to utilize the FKey DETAIL /TRANSFER/ routine for each detail page. Since you must refile drawing No. 2 each time a detail page is added to it, and then call up drawing No. 1 again for the next detail page this can be a very time consuming process should you have 10 or 15 or 20 detail pages to transfer.

Here is a shortcut! File a copy of drawing No. 1 into user /STDLIB/ and give it a short name (lets say ***XXX,***). Now return to your original user and call drawing No. 2 onto the display screen. Now select FKey DETAIL and submenu /STDLIB/. Key in the filename ***XXX,*** the detail page number you want, and it will appear in the next available detail page in your drawing. Repeat for the other detail pages. After you are finished, file drawing No. 2, and then return to user STDLIB and erase drawing ***XXX,***.

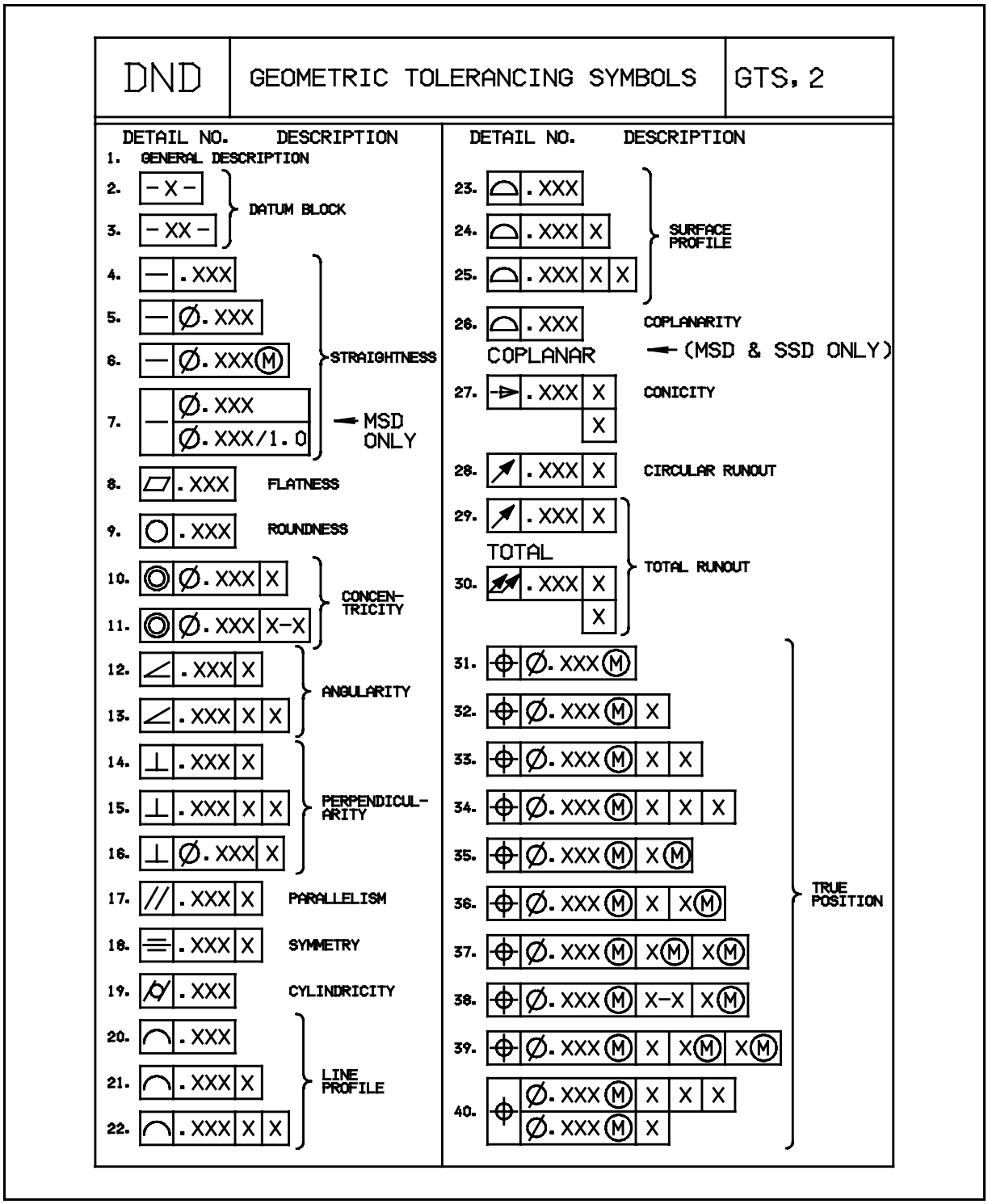

Figure 13 An example of a standard library information sheet

STANDARD LIBRARY

NEMA STANDARD - POLYPHASE MOTORS
SYNCHRONOUS RPM 1800

MTR, AC

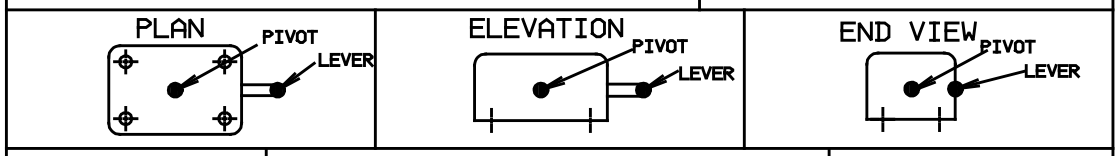

DETAIL PG #	DESCRIPTION	ORIENTATION
# 1	3 HP AC MOTOR FRAME SIZE 213	PLAN
# 2	3 HP AC MOTOR FRAME SIZE 213	ELEVATION
# 3	3 HP AC MOTOR FRAME SIZE 213	END
# 4	5 HP AC MOTOR FRAME SIZE 215	PLAN
# 5	5 HP AC MOTOR FRAME SIZE 215	ELEVATION
# 6	5 HP AC MOTOR FRAME SIZE 215	END
# 7	7½ HP AC MOTOR FRAME SIZE 254U	PLAN
# 8	7½ HP AC MOTOR FRAME SIZE 254U	ELEVATION
# 9	7½ HP AC MOTOR FRAME SIZE 254U	END
# 10	10 HP AC MOTOR FRAME SIZE 256U	PLAN
# 11	10 HP AC MOTOR FRAME SIZE 256U	ELEVATION
# 12	10 HP AC MOTOR FRAME SIZE 256U	END
# 13	15 HP AC MOTOR FRAME SIZE 284U	PLAN
# 14	15 HP AC MOTOR FRAME SIZE 284U	ELEVATION
# 15	15 HP AC MOTOR FRAME SIZE 284U	END

Figure 14 An example of a standard library information sheet

FKey DETAIL

PRACTICE EXERCISE

In this practice exercise you will create geometry on detail pages, and then place a ditto and use from each detail page onto the front page. Follow the instructions closely, and reference Figure 15 on page 26-59 as we go through the different steps.

A) LOGON TO MICRO CADAM AND START A NEW DRAWING:

1. **Change to the drive where MICRO CADAM is loaded**. Let's say it is drive C. Type *C:* and press the enter key (if MICRO CADAM is loaded on a different drive, then replace the *C* with the letter of the drive where it is loaded).

2. **Change to the subdirectory where MICRO CADAM is loaded.** Type *cd \mcadam* (i.e. change directory to \mcadam) and press the enter key on your keyboard. You should now see the dos prompt *C:\MCADAM>* (this assumes you have the command *PROMPT=PG* in your autoexec.bat file).

3. **Run MICRO CADAM**. Type *MCADAM* and press the enter key. MICRO CADAM will now load and you will be presented with a logon screen. The menu prompt ***Key group,user / Sel menu*** appears near the top of the screen.

4. **Key in your group,user**. Type *CAD,TRAIN* on your keyboard and press the enter key. Your active group and user is now CAD,TRAIN.

5. **Turn on the side bar menu (if desired) or check that the popup menu is active**. Press the F1 button near the top of the computer keyboard. The popup menu should appear on the display screen. Should you want to use the sidebar menu, press the CTRL-F1 keys on your computer keyboard (i.e. press and hold the CTRL key with one hand, then press the F1 key at the top of the keyboard with the other hand, then release all keys). The sidebar menu should appear on the right hand side of the display screen. To turn off the sidebar menu press CTRL-F1 again.

6. **Start a new MICRO CADAM drawing**. Select FKey FILE and submenu /START/. Key in the name ***DITTO & USE PRAC,TICE*** and press the enter key on the computer keyboard. A new MICRO CADAM drawing called ***DITTO & USE PRAC,TICE*** is started. The menu prompt ***YN remove axis block*** will appear near the top of the screen. Press the Y/N button on the mouse and the axis block will disappear.

7. **File the new drawing**. Select FKey FILE and submenu /FILE/. The menu prompt ***Key filename / YN same name*** appears near the top of the display screen. Press the Y/N button on the mouse and the drawing will be filed onto the hard disk. The message ***Drawing filed*** will appear near the top of the display screen.

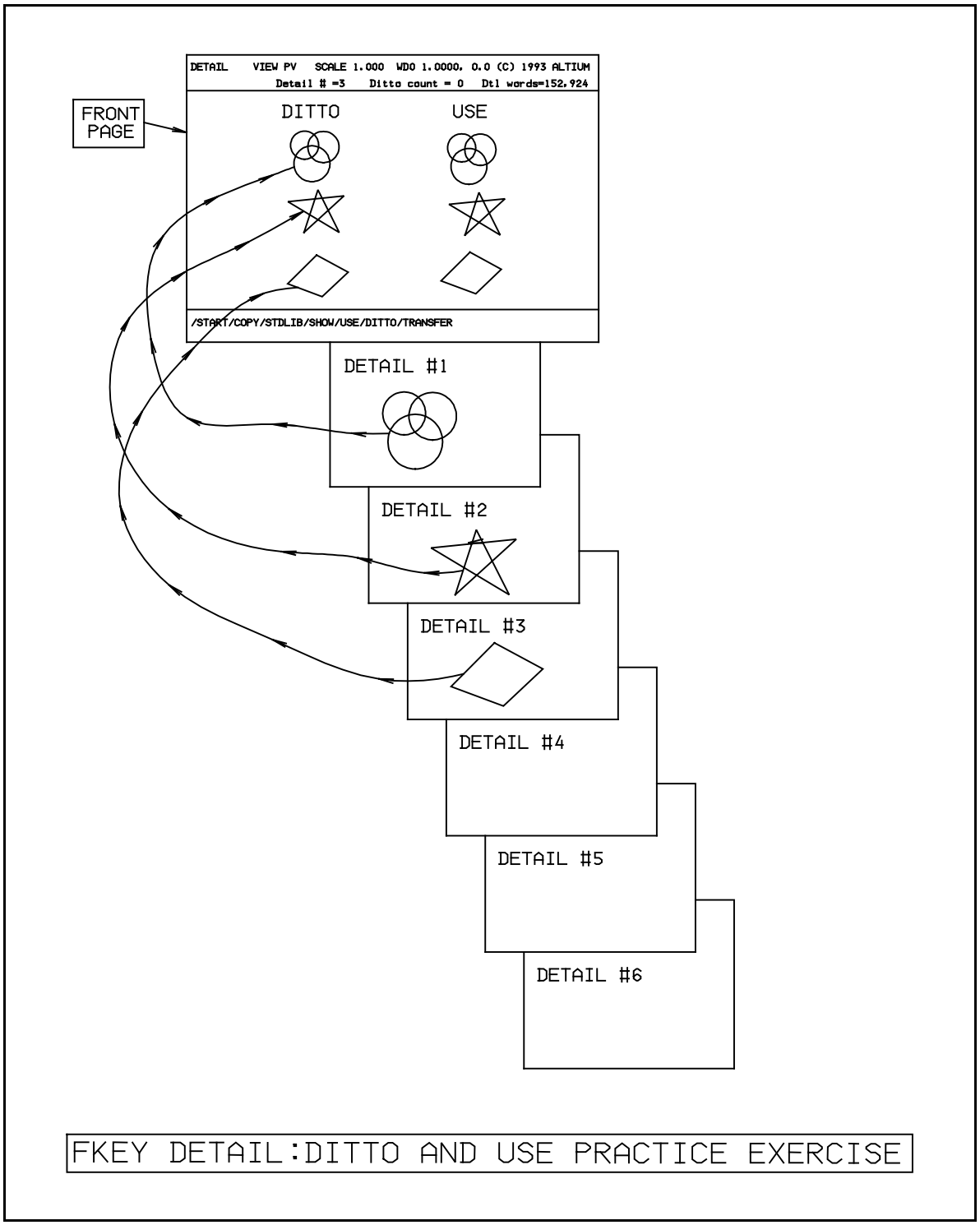

Figure 15 A practice exercise for ditto and use

B) CHANGE THE WINDOW SIZE AND ADD DESCRIPTIVE TEXT TO THE DRAWING:

1. **Change the window size**. Toggle into FKey WINDOW (i.e. press the SELECT and INDICATE buttons on the mouse simultaneously). The window submenu will appear near the bottom of the display screen. Select submenu item /SIZE/ and key in the number 6 (i.e. type 6 on your computer keyboard and press the enter key). The window size will change to 6.0 and the message ***View PV Scale 1.000 Wdo 6.000, 0.000*** will appear near the top of the display screen.

2. **Add descriptive text to the screen**. Select FKey NOTE and key in a size of 1 (i.e. type the number 1 and press the enter key on your keyboard). This sets the note size at 1".

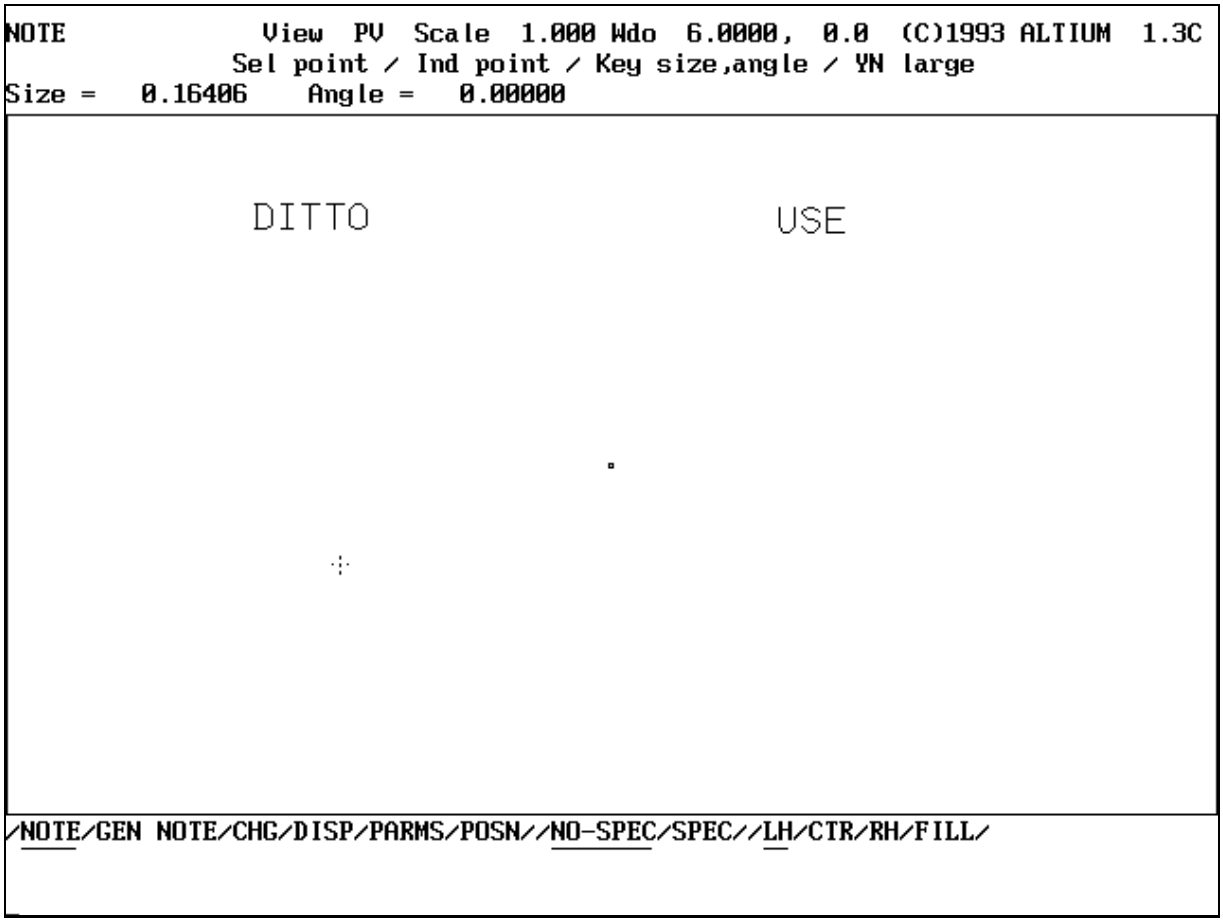

Figure 16 Screen with text labels added

Indicate towards the top left area of your display screen (i.e. move the cursor to the top left are and press the indicate button). A round circle indicating the pivot point of the note will appear. Type in the word *DITTO*, and press the enter key. The word *DITTO* will appear on your display screen. Indicate in the top right area of the display screen; type in the word *USE* and press the enter key. The word *USE* now appears in the top right area of your display screen. Your display screen should look similar to Figure 16. on page 26-60.

3. **Toggle to FKey Window and set window /1/**. Toggle into FKey WINDOW (i.e. press the SELECT and INDICATE buttons at the same time). Select submenu /SET/ and /1/. This *memorizes* the current window position in window memory #1.

C) START A NEW, BLANK DETAIL PAGE, AND DRAW GEOMETRY ON IT:

1. **Start a new, blank detail page**. Select FKey DETAIL. Notice that the word *View PV* appears near the top of the display page. The word *View* is the only way to tell that you are on the front page of your drawing. SELECT submenu /START/. As soon as you select submenu /START/, a new, blank detail page is immediately started, and the word *View* changes to read *Detail*.

2. **Create geometry on the detail page**. Select FKey CIRCLE and indicate three places to construct a circle through 3 points (i.e. indicated points). Repeat this procedure to create two more circles. When finished, your detail page should look like Figure 17 on page 26-62. Select FKey DETAIL and submenu /PIVOT/ and define your pivot point, or accept the center of the screen as a default.

D) RETURN TO THE FRONT PAGE AND PLACE A DITTO AND A USE THERE:

1. **Return to the front page**. With FKey DETAIL the active FKey, select submenu /RTN/ (at the extreme right of the submenu). As soon as you select /RTN/ the word *Detail* will disappear and the word *View PV* will reappear. You are now back on the front page.

2. **Return to window setting /1/**. If necessary toggle to FKey WINDOW and select submenu /1/. You will be returned to window setting #1. Toggle FKey WINDOW again and you will be returned to your previous FKey.

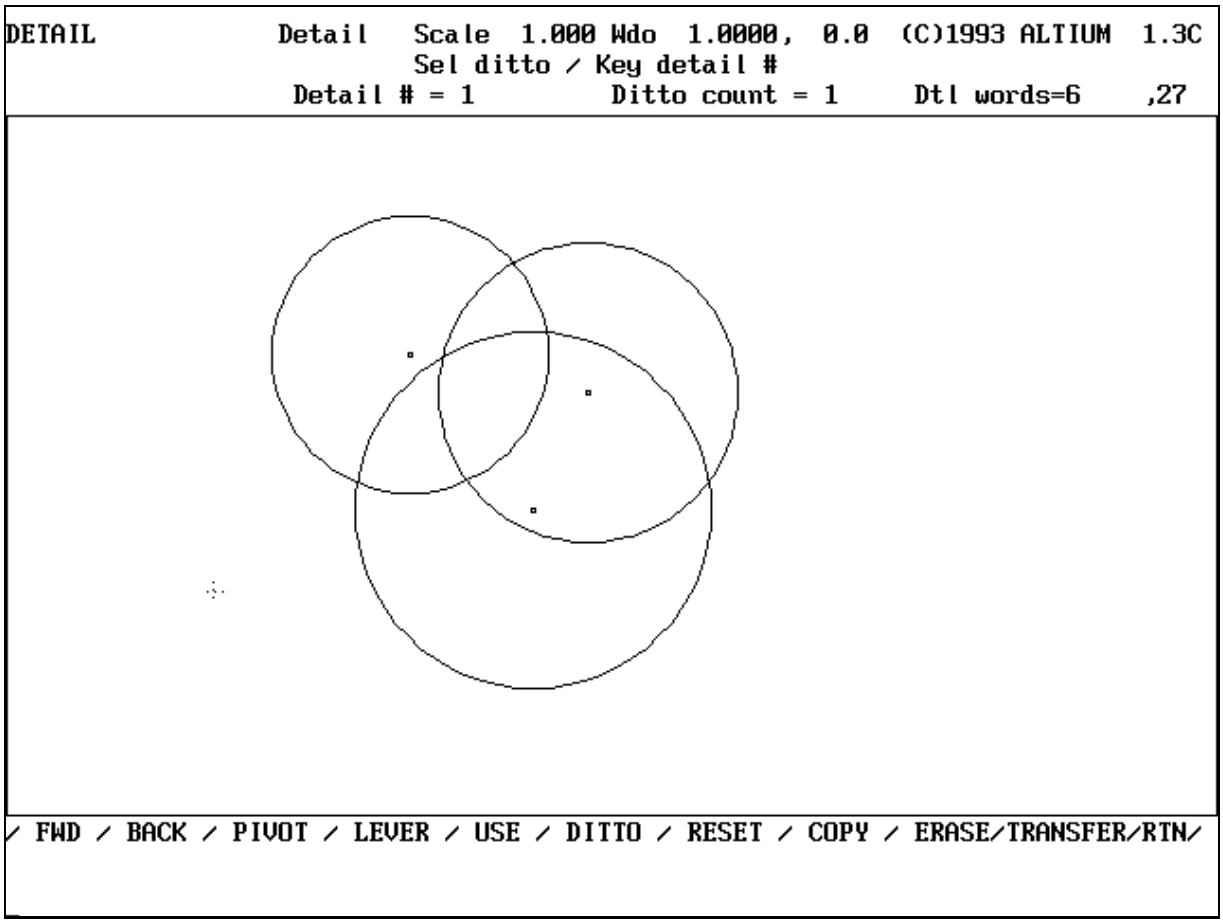

Figure 17 Your detail page after creating geometry on it.

3. **Place a DITTO on the front page**. Select FKey DETAIL and select submenu /DITTO/. Indicate under the word DITTO that you previously created using FKey NOTE. A ditto of the three circles appears.

4. **Place a USE on the front page**. Select submenu /RTN/ to return you one level backwards on the submenu, and the select /USE/. Indicate under the word USE that you previously created using FKey NOTE. The three circles and their center points appear.

5. **Use FKey ANALYZE to compare the DITTO and the USE**. Select FKey ANALYZE and then select the ditto. The information message *Det ditto* appears near the top left of the display screen. Notice that all three circles highlight (i.e. turn green) since they are a single entity...a ditto.

   Now select the USE. The information message *Det circle* appears near the top left of the

display screen. Notice that only one of the three circles is highlighted (i.e. turn green) since they are all geometry...a use.

E) START TWO MORE DETAIL PAGES, DRAW GEOMETRY ON THE DETAIL PAGES, AND THEN PLACE THEM AS A DITTO AND A USE ON THE FRONT PAGE:

1. Repeat sections C and D for detail pages No. 2 and No. 3. Draw a *star* on detail page #2, and a *diamond* on detail page #3. When you have finished creating geometry on the

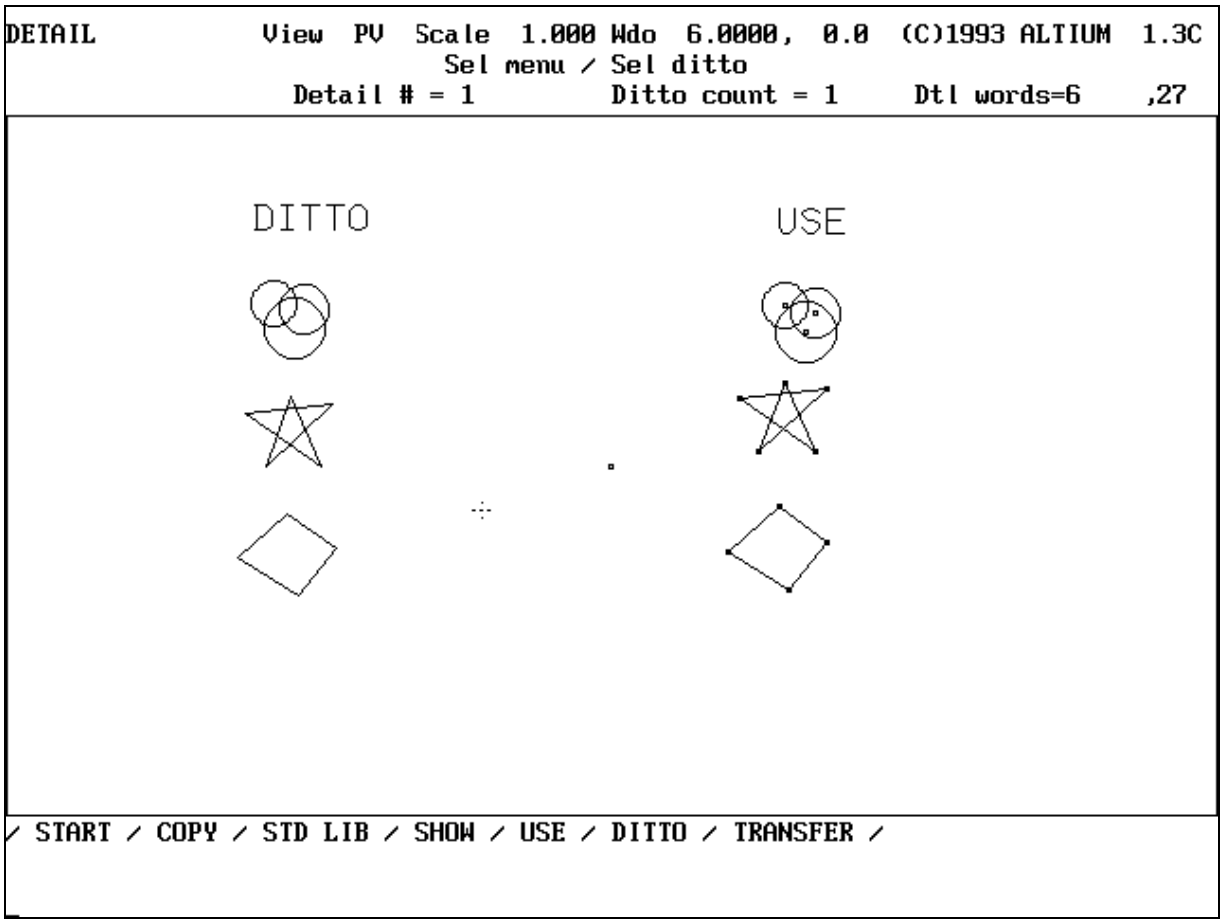

Figure 18 Your display screen after applying a ditto and use from each detail page.

other two detail pages, and placing a ditto and use of each on the front page, your display screen should look like Figure 18 on page 23-63.

F) PLACE MULTIPLE COPIES OF A DITTO ON THE FRONT PAGE AND VERIFY THAT EACH DITTO UPDATES WHEN THE GEOMETRY ON THE DETAIL PAGE IS CHANGED:

1. **Place multiple copies of the diamond ditto (i.e. detail page #3) onto the front page**. Select FKey DETAIL and submenu /DITTO/. Press the Y/N button on the mouse and you have the option to key in the number of the detail page that you want to be active. Key in the number 3. This means that detail page 3 will be used to place any ditto (or use) onto the front screen. INDICATE several times on the left side of the screen. Multiple copies of the diamond ditto should appear.

2. **Move to the detail pages and modify the geometry on the detail page**. Select FKey DETAIL and submenu /SHOW/. As soon as you select submenu /SHOW/ you are immediately moved into the active detail page (this is the detail page with the diamond on it). Use FKey LINE and the /PT-PT/ /LENGTH/ options to add two lines to the diamond.

3. **Return to the front page and verify that all dittos have updated**. Select FKey DETAIL and /RTN/ to return to the front page. Toggle to window #1 if necessary. Your front page should resemble Figure 19 on page 26-65. Notice that all of the diamond dittos have instantly updated to reflect the actual geometry on the detail page. Also notice that the diamond under the note USE has not updated.

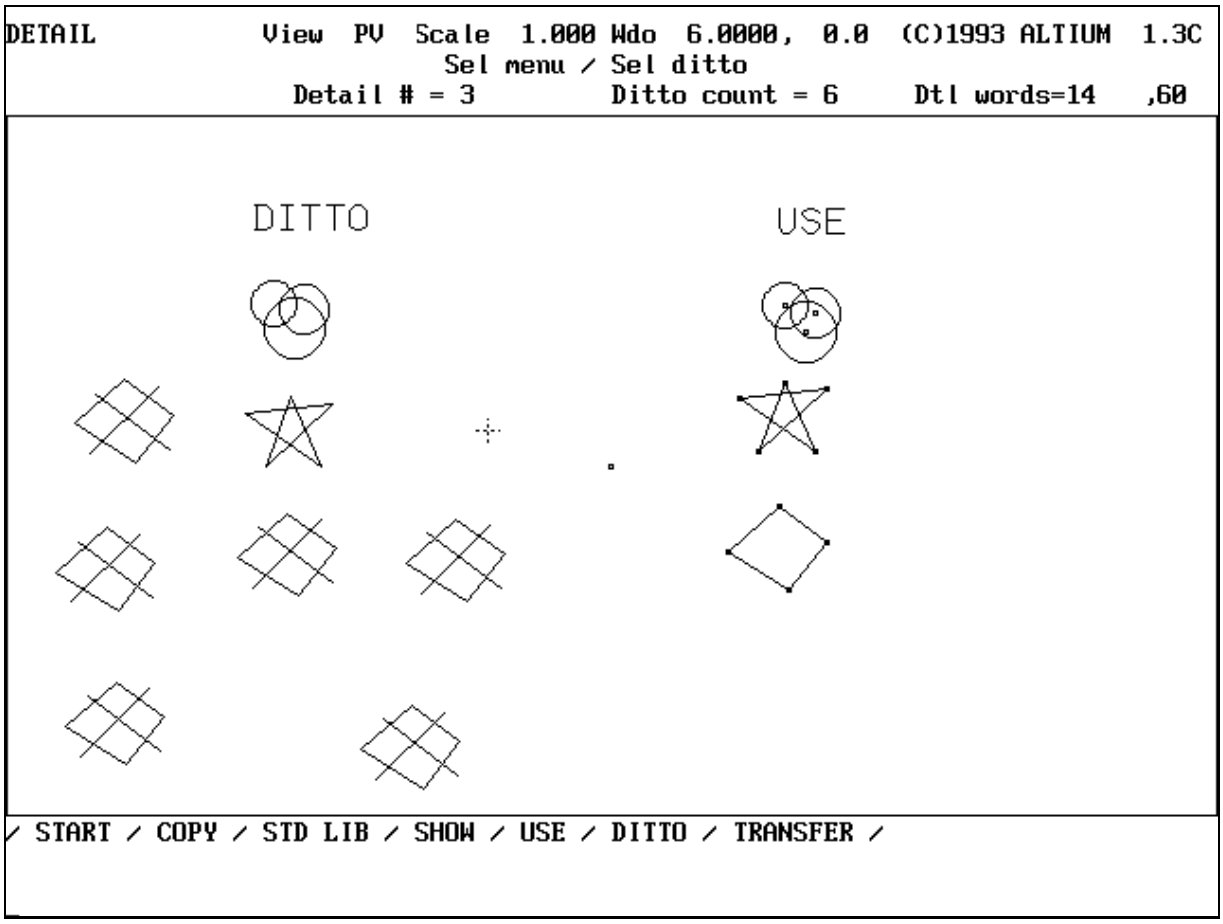

Figure 19 Your front display page after modifying the geometry on a detail page.

CHAPTER 27

FKey ORIGIN

/ START / CHOOSE / NEXT / SHOW / NO SHOW / ERASE /

Menu Item Tree for FKey ORIGIN

FKey ORIGIN allows you to turn the origin display on and off, and to create an alternate coordinate system within the active view. The origin display is a set of axis arrows with one arrow being along the X axis and the other arrow being along the Y axis. This is shown in Figure 2 on page 27 - 2. The coordinate of the origin is always 0,0.

FKey ORIGIN is very useful for the following reasons:

1) The origin axes display can be turned on or off. This helps you find the 0,0 point in the active view. The 0,0 point is the center of the active view.

2) An alternate coordinate system (i.e. another coordinate system in the same auxiliary view) can be created and aligned with the principal coordinate system.

   The alternate coordinate system may have a different scale. You may sometimes have information in both metric and imperial units. You can use FKey ORIGIN to instantly convert between both units. Suppose the primary coordinate system has a scale of 1.0. Create an alternate coordinate system with a scale of 1/25.4 (or .03937). Now, assuming your units are in inches, you can create geometry in the principal coordinate system by drawing everything in inches. Should you have some parts that are dimensioned in millimetres, switch to the alternate coordinate system (i.e. with the scale of 1/25.4) and draw your part with the metric dimensions (i.e. if the part was 35 mm x 78 mm you would draw two lines 35 units long and 78 units long). The alternate coordinate system scale takes care of converting the millimetres to inches (i.e. the 1/25.4 scale). In the alternate coordinate system with the scale of 1/25.4 the two lines will analyze as 35 and 78 units in length. If you switch to the principal coordinate system (i.e. with a scale of 1.0) the lines would now analyze as 1.37795 (i.e. 38/25.4) units and 3.070866 (i.e. 78/25.4) units, thus greatly simplifying any drawing involving mixed units.

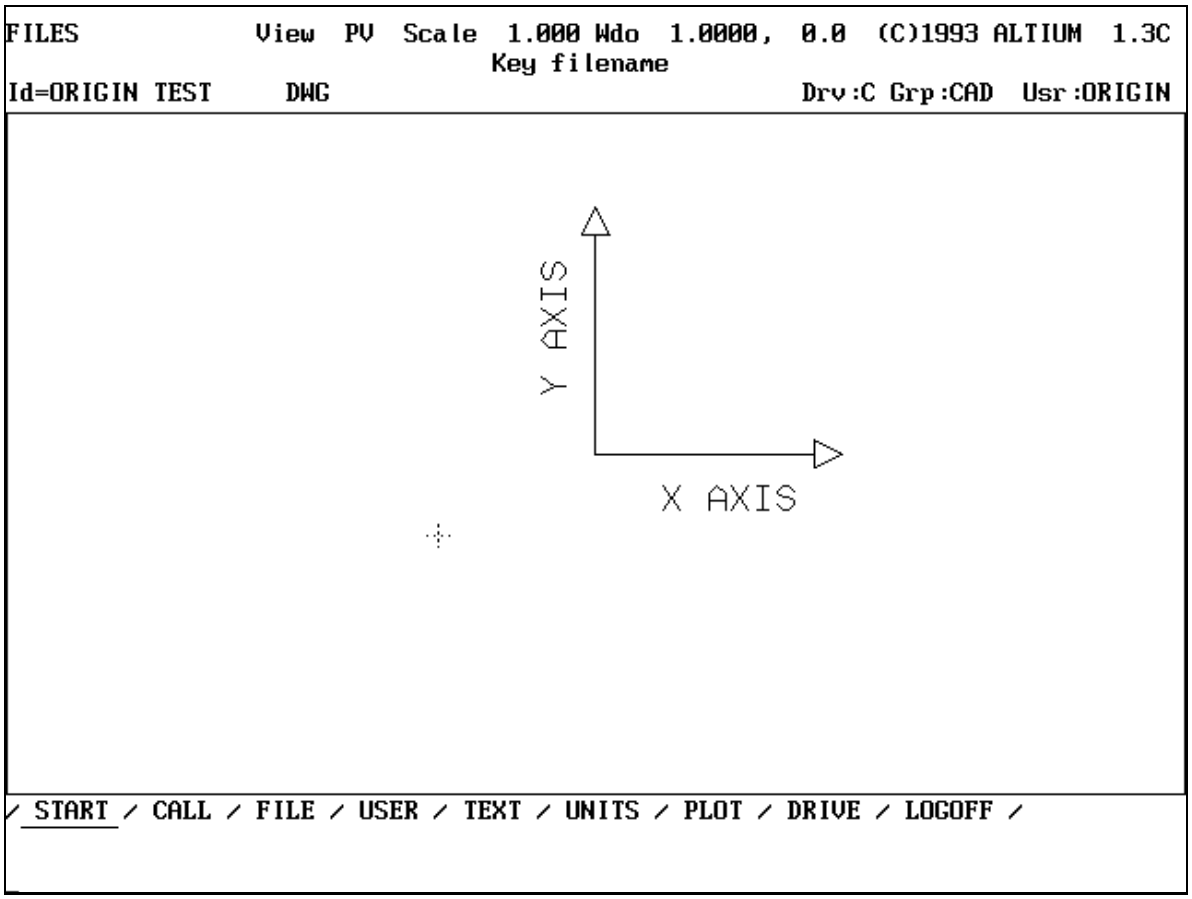

Figure 2 An example of the axis block for the principal coordinate system.

3) An alternate coordinate system can be created at a different position on your display screen so that the new position temporarily becomes 0,0. In some instances this can simplify creation of geometry by allowing you to key in information relative to the new 0,0 origin.

4) An alternate coordinate system can be created such that it is at the same angle as an existing line. The display screen can be turned (use FKey WINDOW /TURN/) to align with the current alternate coordinate system and then set into a window memory. Thus you can work in a normal orientation on elements that are positioned at an angle.

Each view can contain an unlimited number of alternate coordinate systems.

FUNCTION KEY ORIGIN SUBMENU OPTIONS:

- /START/ Allows you to create a new alternate coordinate system within the current view.
- /CHOOSE/ Allows you to choose a new active view by selecting an element in that view. This duplicates a feature found in FKey AUX VIEW.
- /NEXT/ Allows you to switch from one coordinate system to the next coordinate system (in the same Auxiliary View). Each time you select SubMenu /NEXT/ you will switch to the next coordinate system.
- /SHOW/ Allows you to turn on the axis block display of the current coordinate system.
- /NO SHOW/ Allows you to turn off the axis block display of the current coordinate system.
- /ERASE/ Allows you to erase the current alternate coordinate system. The primary coordinate system cannot be erased.

FKey ORIGIN

SUBMENU / START /

FKey ORIGIN submenu / START / allows you to start a new coordinate system.

To start a new coordinate system, follow these steps:

1. SELECT FKey ORIGIN /START/ (if you are not already there). The menu prompt ***Sel element / Key angle = 0.000*** appears near the top of the screen.

2. SELECT an existing line on your screen. The X axis of the new alternate coordinate system will have the same angle as this line. The menu prompt ***Ind direction*** appears near the top of the screen.

3. INDICATE near one end of the line you selected above to determine the positive X direction. The menu prompt ***Def point*** appears near the top of the screen.

4. SELECT (or INDICATE) an existing point. This point will become the origin (0,0) of the new alternate coordinate system. The menu prompt ***Key scale = 1.000*** appears near the top of the screen.

5. Press the Y/N button on your mouse to accept the displayed scale, or key in a different scale.

6. The alternate coordinate system is created, centered on the selected point, and with the axis arrows displayed at the same angle as the selected line.

NOTE: Instead of selecting a line and indicating a direction, you can also key an angle to define the X axis direction.

An example of starting an alternate coordinate system is shown in Figure 3 on page 27 - 6.

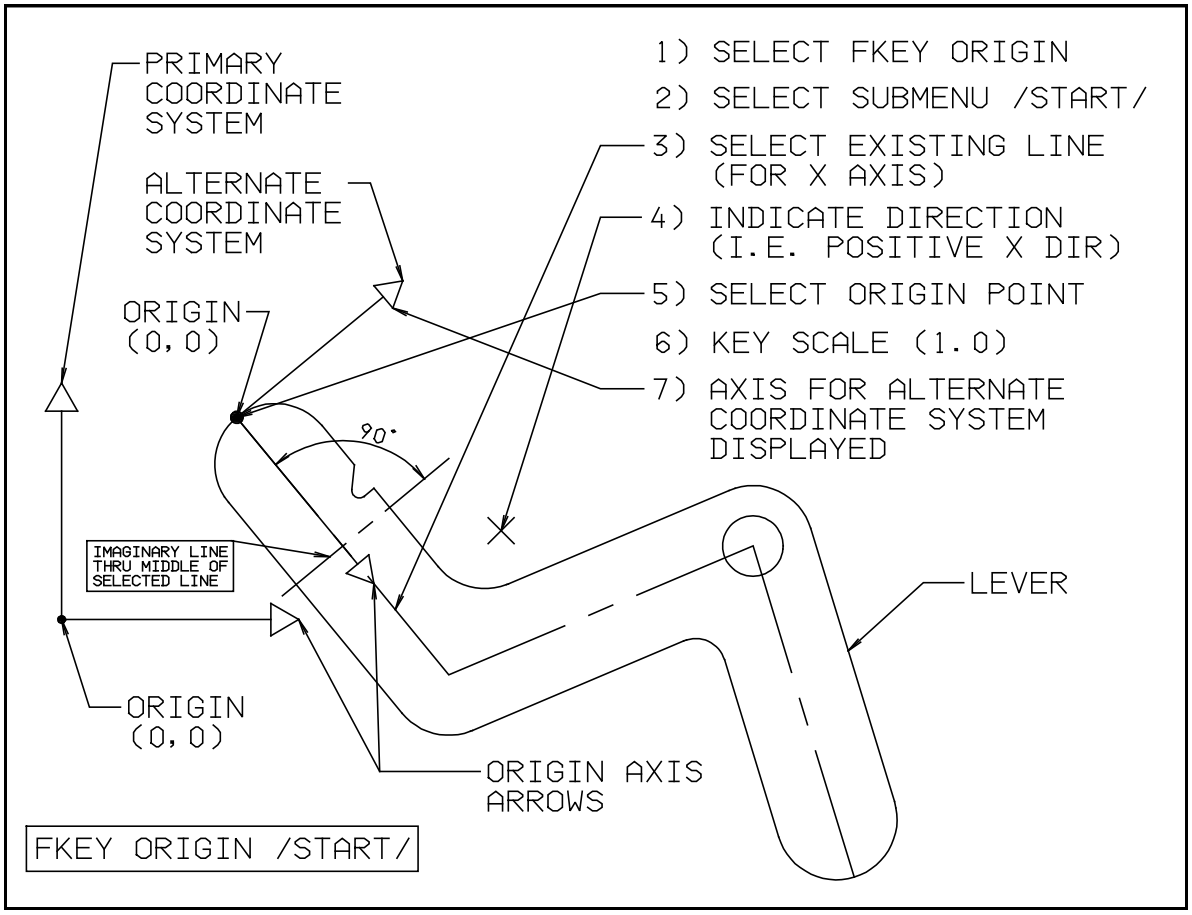

Figure 3 An example showing how to start another coordinate system.

CHAPTER 28

PLOTTING

ADDING PLOT DATA TO A MICRO CADAM DRAWING:

MICRO CADAM has an electronic drawing area of 20,000 x 20,000 units. If the units are inches then this drawing area is 20,000 inches x 20,000 inches. Before plotting a MICRO CADAM drawing you must tell MICRO CADAM which part of this 20,000 inch x 20,000 inch area you want to plot. You do this by adding plot data to a drawing. Plot data is a term used to describe plotting parameters assigned to a MICRO CADAM drawing. Plot data parameters include ANGLE, LOAD PT, HEIGHT, WIDTH, SCALE, NOTE SCALE, SCALED HT, and SCALED WIDTH. After plot data has been added it can be filed with the drawing.

Plot data can be added to a drawing in two different ways:

- INDICATE METHOD (Indicate the opposite corners of the plot area)
- NC LINE METHOD (Define the plot area by means of NC lines)

Let's add plot data to a drawing called HOLLYHILL PLOT,EX. We will use the INDICATE METHOD first:

A) ADD PLOT DATA TO A DRAWING BY THE INDICATE METHOD:

1. Call the drawing HOLLYHILL PLOT,EX from the CAD,TRAIN group and user. Select FKey WINDOW from the menu and recall window set #1 (i.e. select the number 1 on the bottom menu).

2. Select FKey FILE and submenus /PLOT/ and /PLOT DATA/. The menu prompt ***Sel load pt / Ind load pt*** appears near the top of the display screen.

3. Indicate the bottom right location for one corner of the plot area. The menu ***Def opposite corner / Sel menu*** appears.

4. Indicate the top left location for the other diagonal corner of the plot area. The menu prompt ***Redefine corner / YN end*** appears. The drawing should now look like Figure 1 on page 28 - 2.

5. Press the YN button on the mouse to end the corner definition. The menu prompt ***Key scale = 1.000*** appears.

6. Key .01 for the scale. The plot rectangle is displayed on top of the drawing. The menu prompt ***YN accept / Sel menu*** appears.

7. Press the YN button on the mouse to accept the plot area. The display screen shown in Figure 2 on page 28 - 2 appears and the menu prompt ***Drawing must be filed before plot data can be used*** appears near the top of the display screen. Notice that the scaled height and width of the plot is 10.59829" x 10.57252". (Yours may differ!)

8. The submenu items may be used to modify the plot data displayed as follows:

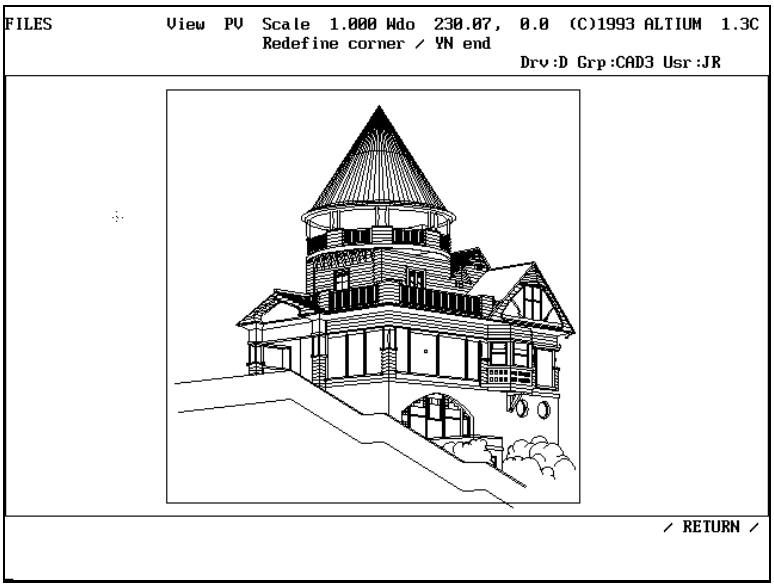

Figure 1 Plot data by Indicate method..Screen 1

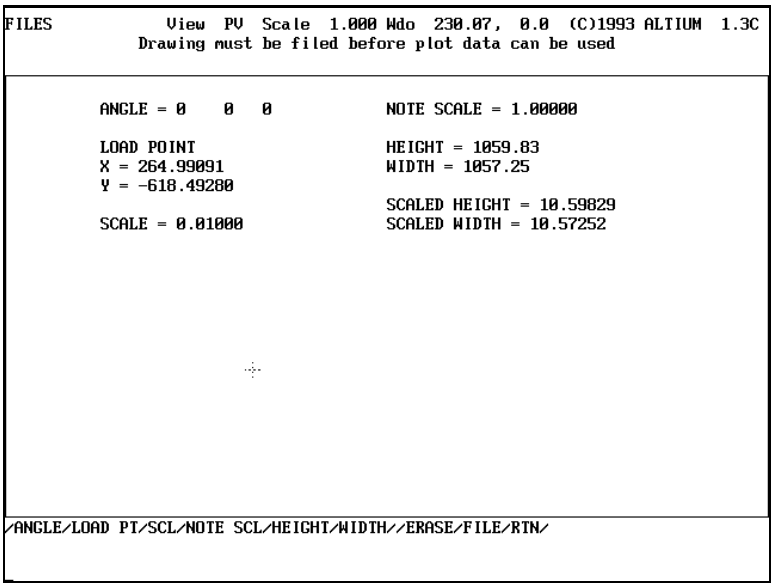

Figure 2 Plot data by indicate method..Screen 2

a. **/ANGLE/** Allows you to change the plot angle.

b. **/LOAD PT/** Allows you to change the load point, in effect adding the plot data all over again.

c. **/SCALE/** Allows you to change the scale of the plot to allow it to fit onto a specific size sheet of paper. This /SCALE/ changes the absolute size of everything on the plot. If you had an auxiliary view scale of .375 when you created the drawing, you must have a plot scale of 1.000 to be able to scale your drawing after plotting. The preferred method is to use a plot scale of 1.000 (which retains the auxiliary view scale) and to use a starter format (see the section on starter format later in this chapter).

d. **/NOTE SCL/** Determines the scaled size of notes.

e. **/HEIGHT/** Allows you to key a plot height.

f. **/WIDTH/** Allows you to key a plot width.

g. **/FILE/** Allows you to file the drawing from this screen.

h. **/ERASE/** Allows you to erase the plot data from the drawing and redefine the plot data again.

9. SELECT submenu /FILE/ from this screen. The menu prompt ***Key filename / YN same name*** appears. File this drawing under a different name. Using the right arrow key on your keyboard, move the text cursor (i.e. the little bar under one of the letters in the drawing name at the bottom of the screen) under the **EX**. Type your initials. For example, the drawing name could now look like **HOLLYHILL PLOT,TDS**. **DO NOT TYPE OVER OR MOVE THE COMMA (i.e. ",")**. The message ***Drawing filed*** now appears. Notice that your drawing (e.g. HOLLYHILL PLOT,TDS now has a 'P' beside it, signifying that it now has plot data attached to it.

B) ADD PLOT DATA TO A DRAWING BY THE NC LINE METHOD:

1. Call the drawing HOLLYHILL PLOT,EX from the CAD,TRAIN group and user. SELECT FKey WINDOW from the menu and recall window SET #1 (i.e. select the number 1 on the bottom menu).

2. Select FKey LINE /HORZ/ and indicate an unlimited length horizontal line at the bottom and top of the required plot area.

   Now select submenu /VERT/ and indicate an unlimited length vertical line at the left and right of the required plot area.

3. Select FKey CORNER and corner the four corners of the plot area. See Figure 3 at the right for approximate locations for the lines.

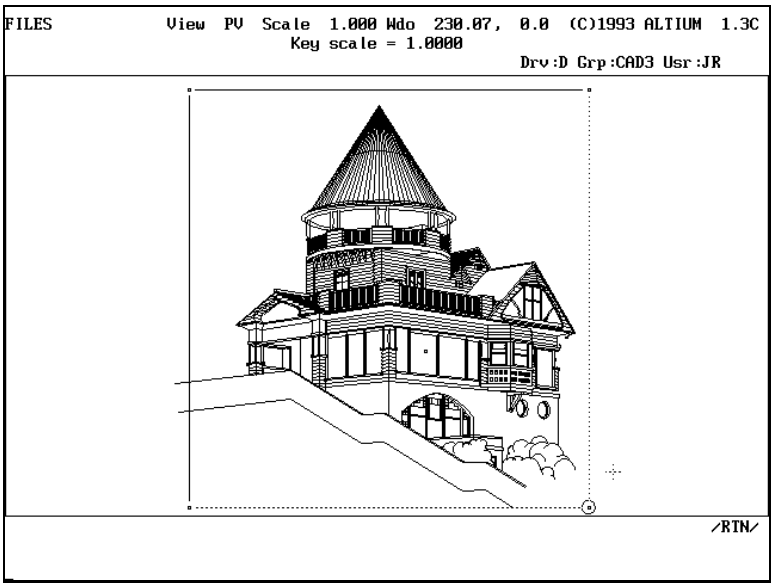

Figure 3 Plot data by NC method..Screen 1

4. Select FKey TYPE and submenu /STYLE/ /NC/ and select the four lines just created. They will turn to NC (i.e. numerical control) lines (notice that an NC line has a gap between the displayed end of the line and a dot at the actual line end). The lines **MUST** be NC lines to be used for creating plot data.

5. Select FKey FILE and submenus /PLOT/ and /PLOT DATA/. The menu prompt ***Sel load pt / Ind load pt*** appears near the top of the display screen.

6. Select the point at the bottom right intersection of two NC lines. The horizontal and vertical NC line will highlight (i.e. turn green) and a circle will appear at the load point (the intersection of the two NC lines). The menu prompt ***Key scale = 1.000*** appears.
7. Key .01 as the scale. The drawing area to be plotted is highlighted and the menu prompt ***YN accept / Sel menu*** appears.

8. Press the Y/N button on the mouse to accept the plot area. The screen shown in Figure 4 on page 5 appears. Notice that the scaled height and width of the plot is 10.69377" x 10.23764".

9. The submenu options can be used to modify the plot data here the same way they do with the Indicate method.

10. Select submenu /FILE/ from this screen. The menu prompt ***Key filename / YN same name*** appears. Type over the filename and press the ENTER key. The message ***Drawing***

filed appears.

```
FILES          View  PV  Scale  1.000 Wdo  230.07,  0.0  (C)1993 ALTIUM  1.3C
            Drawing must be filed before plot data can be used
                                                   Drv:D Grp:CAD3 Usr:JR

        ANGLE = 0    0   0            NOTE SCALE = 1.00000

        LOAD POINT                    HEIGHT = 1069.38
        X = 288.91064                 WIDTH = 1023.76
        Y = -628.04077
                                      SCALED HEIGHT = 10.69377
        SCALE = 0.01000               SCALED WIDTH = 10.23764

/ANGLE/LOAD PT/SCL/NOTE SCL/HEIGHT/WIDTH//ERASE/FILE/RTN/
```

Figure 4 Plot data by NC method..Screen 2

C) PLOTTING A MICRO CADAM DRAWING:

See **INSTALLATION AND SETUP** in Chapter 1 for information on configuring your computer and MICRO CADAM for plotting.

When you select FKey FILE and submenu /CALL/ and press the YN button on the mouse, a list of drawings in the current group and user is displayed on the screen. Any drawing that has the letter 'P' to the left of the drawing name has plot data attached to the drawing. Only drawings with plot data attached can be plotted.

Due to constraints presented by the DOS 640K limit the base interactive design program (i.e. MICRO CADAM) and the plot scheduling program (MICRO CADAM PLOT) must be run as two separate programs. These two programs if combined would be too big to load into memory.

To plot a MICRO CADAM drawing you must first exit the MICRO CADAM program (i.e. the program started by running the MCADAM command) and then start the MICRO CADAM PLOT program. To start the plotting program type the word "PLOT" and press the enter key. The logon screen that initially appears looks just like the interactive MICRO CADAM display screen, and all the menu selects and mouse button work the same.

TO PLOT A MICRO CADAM DRAWING, FOLLOW THESE STEPS:

1. Exit the interactive MICRO CADAM program and return to the DOS prompt (e.g. C:\MCADAM> or D:\MCADAM>)

2. Start the MICRO CADAM PLOT program either of the following ways:

   a. Type the word "MENU" and the MICRO CADAM menu (shown in the figure at the right) will appear. Using your up and down arrow keys on your keyboard, highlight the words **MICRO CADAM PLOT** and press the enter key. The plotting program loads and the display screen (shown in the graphic below) appears. The menu prompt ***Key group,user*** is displayed at the top of the screen.

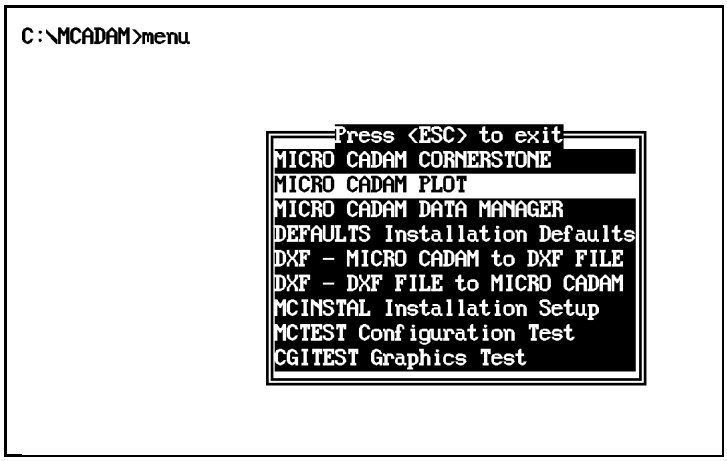

   b. Type the word "PLOT" and press the enter key on the keyboard. The MICRO CADAM PLOT program loads and the display screen shown at the right appears. The menu prompt ***Key group,user*** is displayed at the top of the screen.

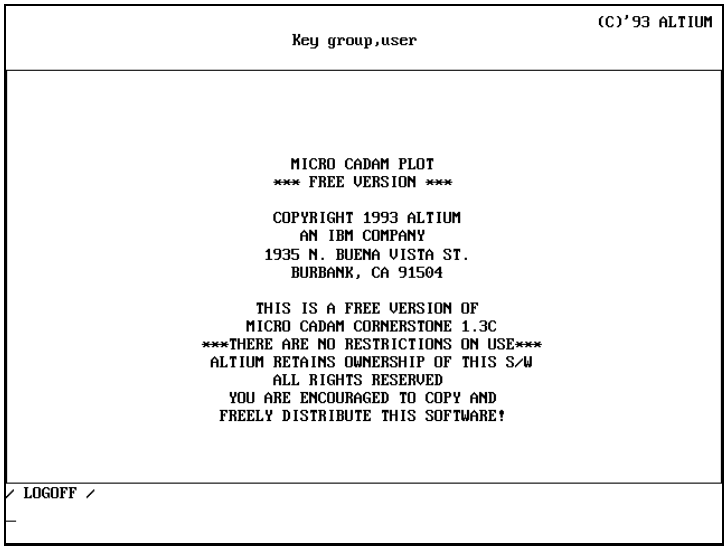

3. Key in CAD,DEMO (or whatever group,user you want to plot from). The display screen changes as shown in the graphic at the right. Notice that the word "PLOTTING" appears in the top left corner of the display screen to verify that you are in the plotting module. The menu prompt ***Key filename / YN call*** is displayed at the top of the screen.

```
PLOTTING                                                    (C)'93 ALTIUM
                          Sel filename / Key page #
Id=                                                Drv:C Grp:CAD  Usr:DEMO
                                                              PAGE 1
P  4 WW2 PLANES
P  4WD                  RO
   ANIMATION
P  BENCH GRINDER
P  BICYCLE          A1  RO
P  BIKE             2
P  ELECTRICAL SCHEMATIC
P  F-16
   FLOOR PLAN
P  FRONT ELEV
P  GARAGE ADDITION      RO
P  HOLLYHILL            RO
P  HOTROD
P  LOCOMOTIVE
/ FWD / BACK / CALL / OVERPLOT / RETURN /
_
```

```
PLOTTING                                                    (C)'93 ALTIUM
                          Key filename /  YN call
Id=                                                Drv:C Grp:CAD  Usr:DEMO

                          MICRO CADAM PLOT
                        *** FREE VERSION ***

                       COPYRIGHT 1993 ALTIUM
                          AN IBM COMPANY
                      1935 N. BUENA VISTA ST.
                         BURBANK, CA 91504

                     THIS IS A FREE VERSION OF
                     MICRO CADAM CORNERSTONE 1.3C
                  ***THERE ARE NO RESTRICTIONS ON USE***
                   ALTIUM RETAINS OWNERSHIP OF THIS S/W
                         ALL RIGHTS RESERVED
                    YOU ARE ENCOURAGED TO COPY AND
                   FREELY DISTRIBUTE THIS SOFTWARE!

/ CALL / USER / DRIVE / LOGOFF /
_
```

4. Press the Y/N button on the mouse (or the F2 Function Key at the top of your computer keyboard) to display a listing of models in the current group,user. If necessary select the submenu /FWD/BACK/ to 'flip' through the display pages to find the drawing you want to plot. Note that a drawing on the screen listing must have a 'P' beside it to plot (in other words, it must already have plot data attached to it).

5. Select the model from the screen. The model begins to plot and the screen temporarily goes blank.

6. After the model has plotted, the display screen returns. You may repeat the procedure to plot another model, or select /LOGOFF/ and return to the DOS prompt.

D) OVERPLOTTING MICRO CADAM MODELS ON TOP OF EACH OTHER:

Several MICRO CADAM models may be plotted on top of each other. All of the models stack up on top of paper center. Paper center is the middle of the 20,000 x 20,000 unit electronic drawing area. Auxiliary views and auxiliary view origins and scales are all ignored when aligning the models. (see the chapter on FKey WINDOW for more information about paper center). To check the alignment of two models before overplotting, see the /OVRLY/ submenu item in FKey WINDOW.

You may want to overplot MICRO CADAM models for the following reasons:

- You may sometimes require more than one MICRO CADAM model to finish a drawing. This could happen when you reach a "model full" condition (see FKey WINDOW for more information on "model full") on an unfinished model. You could then decide to start another model (or two) to finish the drawing. Use the overplot feature to plot all models into a single plot file.

- You may elect to use a final overplot format. Overplot formats sometimes contain much legal information, text and geometry that you want plotted on every drawing. If this format information becomes part of every drawing, each drawing would carry this as overhead. To save model space and disk space, overplot the final overplot format on top of the models as you plot them.

- You may want to automatically ’shrink’ a D size drawing to plot onto B size paper without changing the plot data on the D size drawing. (You can use any combination of a large drawing plotted onto smaller paper, or a small drawing plotted onto larger paper.

When overplotting drawings on top of each other, the plot data is obtained from the first drawing selected. Plot data is ignored from all subsequent drawings. All overplotted drawings align on paper center.

TO OVERPLOT A DRAWING, FOLLOW THESE STEPS:

1. Exit the interactive MICRO CADAM program and return to the DOS prompt (e.g. C:\MCADAM> or D:\MCADAM>)

2. Start the MICRO CADAM PLOT program either of the following ways:

   a. Type the word "MENU" and the MICRO CADAM menu (shown in the figure at the right) will appear. Using your up and down arrow keys on your keyboard, highlight the words **MICRO CADAM PLOT** and press the enter key. The plotting program loads and the display screen (shown in the graphic below)

appears. The menu prompt ***Key group,user*** is displayed at the top of the screen.

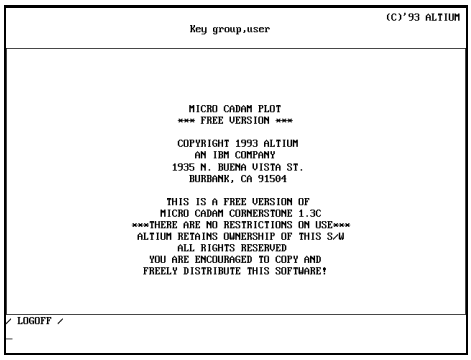

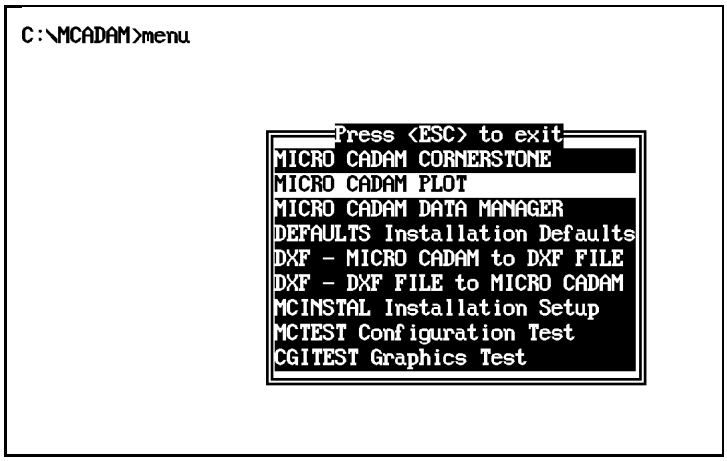

b. Type the word "PLOT" and press the enter key on the keyboard. The MICRO CADAM PLOT program loads and the display screen shown at the right appears. The menu prompt ***Key group,user*** is displayed at the top of the screen.

3. Key in CAD,DEMO (or whatever group,user you want to plot from). The display screen changes as shown in the graphic at the right. Notice that the word "PLOTTING" appears in the top left corner of the display screen to verify that you are in the plotting module. The menu prompt ***Key filename / YN call*** is displayed at the top of the screen.

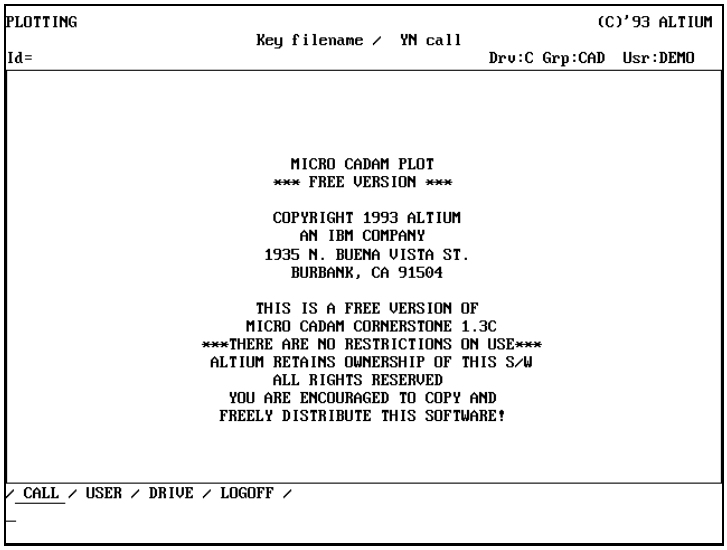

4. Press the Y/N button on the mouse (or the F2 Function Key at the top of your computer keyboard) to display a listing of models in the current group,user. If necessary select the submenu /FWD/BACK/ to ’flip’ through the display pages to find the drawing you want to plot. Note that a drawing on the screen listing must have a ’P’ beside it to plot (in other words, it must already have plot data attached to it).

```
PLOTTING                                                        (C)'93 ALTIUM
                          Sel filename / Key page #
Id=                                                  Drv:C Grp:CAD  Usr:DEMO

                                                              PAGE 1
 P  4 WW2 PLANES
 P  4WD                  RO
    ANIMATION
 P  BENCH GRINDER
 P  BICYCLE          A1  RO
 P  BIKE             2
 P  ELECTRICAL SCHEMATIC
 P  F-16
    FLOOR PLAN
 P  FRONT ELEV
 P  GARAGE ADDITION      RO
 P  HOLLYHILL            RO
 P  HOTROD
 P  LOCOMOTIVE
/ FWD / BACK / CALL / OVERPLOT / RETURN /
_
```

5. Select submenu /OVERPLOT/. The message ***Overplot mode*** appears on the top right side of the display screen.

6. Select the first model from the screen. (For example select GARAGE ADDITION). The word ***NEWPLOT*** appears beside the selected model. The menu prompt ***Sel filename / Key page / YN plot*** appears.

7. Select the second model. (For example select FLOOR PLAN). The word ***OVERPLOT*** appears beside this model. (A graphic showing how your screen should look at this point is shown at the right.)

```
PLOTTING                                                    (C)'93 ALTIUM
                          Sel filename / Key page #
                     Sel filename / Key page # / YN plot     Overplot mode
                                                          PAGE 1
P  4 WW2 PLANES
P  4WD                  RO
   ANIMATION
P  BENCH GRINDER
P  BICYCLE         A1   RO
P  BIKE            2
P  ELECTRICAL SCHEMATIC
P  F-16
   FLOOR PLAN            OVERPLOT
P  FRONT ELEV
P  GARAGE ADDITION       NEWPLOT
P  HOLLYHILL            RO
P  HOTROD
P  LOCOMOTIVE
/ FWD / BACK / CALL / OVERPLOT / RETURN /
_
```

The paper center of this second model will be aligned with the paper center of the first model selected. The plot data from the first model is used to plot all of the models. The plot data from the second model, and all subsequent models is ignored. Note that only the first model needs to have plot data.

8. Select the other models you want to overplot on top of the first model. The word ***OVERPLOT*** appears beside each model selected.

9. When you are finished selecting the overplot models, press the YN button on the mouse, and all drawings selected will be combined and plotted onto a single piece of paper. When the YN button is pressed the display screen temporarily goes blank.

10. After the models have plotted, the display screen returns. You may repeat the procedure to plot other models, or select /LOGOFF/ and return to the DOS prompt.

E) CREATING A ’D’ SIZE TO ’B’ SIZE PLOT CONVERSION DRAWING:

There are situations where you may want to take a large drawing and plot it onto a smaller piece of paper. This may happen for the following reasons:

- You may want to fax a copy of your drawing to someone. To do this you would want to plot a ’C’ (i.e. 17" x 22") size drawing onto ’A’ (i.e. 8½ x 11 paper) so that it will fit into your fax machine.

- You have just run out of ’D’ size paper, but have a lot of ’C’ size paper around. You decide to plot your drawings onto ’C’ size paper until you are able to get more ’D’ sized paper.

- You want to make up a project drawing book that will hold ’B’ (i.e. 11" x 17") size drawings of the entire project. This means that ’E’ size, ’D’ size and ’C’ size drawings would be plotted to ’B’ size. A ’B’ size project book would be easier to handle and move around. The drawings would be smaller, but still carry enough information to be useful. Your entire project is in one book.

As an example of the procedure for creating a plot conversion drawing, we will assume that you want to plot ’D’ size (i.e. 24" x 36") drawings onto ’B’ size (i.e. 11" x 17") paper.

(NOTE: You can also change the plot size of a drawing by changing the plot scale on the drawing, refiling the drawing, then plotting it. The disadvantage of this approach is that you must manually change the plot data on each drawing before and after plotting it. Plot conversion drawings allow you to plot any drawing to any size you want, without manually changing plot data each time.)

TO CREATE A ’D’ SIZE TO ’B’ SIZE PLOT CONVERSION DRAWING, FOLLOW THESE STEPS:

1. In the MCADAM program, change to the group,user where your ’D’ size drawings are kept.

2. CALL one of the ’D’ drawings from the disk into computer memory.

3. File the drawing in current group,user with the name **D TO B CONVERT,** . The

original ’D’ size drawing is still in computer memory but its name is changed.

4. Erase elements using the following function keys:

   a. Use FKey AUXVIEW /ERS/ to erase all auxiliary views except View PV (View PV cannot be erased with FKey AUXVIEW).

   b. Use FKey GROUP /TRAP OUT/ and FKey /SHOW/ /ERASE/ to erase all geometry and text from View PV.

   c. Use FKey SHOW /SHO/ to move into the NO SHOW world and erase any information found there.

   d. Use FKey DETAIL /SHOW/ /ERASE/ to erase all detail pages.

5. Select FKey SHOW /PACK/ and pack the drawing (see FKey SHOW in Chapter 20 for more information on /PACK/).

6. All elements have been erased from the drawing. **The drawing is completely empty, except that it still has its plot data is still intact**.

7. Change the plot scale on the drawing as follows:

   a. Select FKey FILE /PLOT/ /PLOT DATA/. Select submenu /SCL/. The menu prompt ***Key scale = 1.000*** appears near the top of the display screen.

   b. Key a new scale. The menu prompt ***YN accept plot data / Sel menu*** appears. Press the YN button on the mouse to accept the scale.

   c. The **SCALED HEIGHT** and **SCALED WIDTH** will display the current plot height and width. Keep adjusting the plot scale (i.e. /SCL/) until the **SCALED HEIGHT = 11** and **SCALED WIDTH = 17** is displayed (This example assumes you are plotting onto ’B’ size, or 11" x 17" paper).

   d. Overfile the drawing. Select submenu /FILE/. The menu prompt ***Key filename / YN same name*** appears. Press the Y/N button on the mouse to confirm that the name (**D TO B CONVERT**) is the same. The menu prompt ***Key filename / YN replace*** now appears. Press the YN button on the mouse to confirm that you want to replace the existing file on disk (i.e. to overfile). The menu prompt ***Drawing filed*** appears near the top of the screen.

8. You now have an original ’D’ size drawing with all its information erased. The 24" x 36" plot data has now been scaled down to plot onto a piece of 11" x 17" paper.

TO USE THE ’D’ SIZE TO ’B’ SIZE PLOT CONVERSION DRAWING, FOLLOW THESE STEPS:

1. Exit the interactive MICRO CADAM program and return to the DOS prompt (e.g. C:\MCADAM> or D:\MCADAM>)

2. Start the MICRO CADAM PLOT program by typing the word "PLOT" and pressing the enter key on the keyboard. The MICRO CADAM PLOT program loads and the display screen appears. The menu prompt ***Key group,user*** appears near the top of the display screen.

3. Key in the group,user where the ’D’ size drawings are located (e.g. CAD,PROJ). The word "PLOTTING" appears in the top left corner of the display screen to verify that you are in the plotting module. The menu prompt ***Key filename / YN call*** appears.

4. Press the Y/N button on the mouse to display a listing of models in the current group,user. Select the submenu /FWD/BACK/ to ’flip’ through the display pages to find the drawing **D TO B CONVERT**. This is the first drawing you want to plot. The plot data is taken from **D TO B CONVERT** and plot data on any subsequent ’D’ drawings is ignored.

5. Select submenu /OVERPLOT/. The message ***Overplot mode*** appears on the top right side of the display screen.

6. Select **D TO B CONVERT** from the screen. The word ***NEWPLOT*** appears beside the model **D TO B CONVERT**. The menu prompt ***Sel filename / Key page / YN plot*** appears.

7. Select any ’D’ sized model you want to overplot. The word ***OVERPLOT*** appears beside the model. The paper center of this ’D’ sized model will be aligned with the paper center of the **D TO B CONVERT** model selected. Since the **D TO B CONVERT** was derived from a ’D’ sized model both models will align perfectly on paper center. The plot data from the **D TO B CONVERT** model is used to plot the ’D’ size model. The plot data from the ’D’ size model is ignored.

8. Press the YN button on the mouse, and the ’D’ size drawing will be plotted with the blank **D TO B CONVERT** drawing. When the YN button is pressed the display screen

temporarily goes blank.

9. After the models have plotted, the display screen returns. You may repeat the procedure to plot other models, or select /LOGOFF/ and return to the DOS prompt.

F) THE STARTER FORMAT:

A starter format is a normal MICRO CADAM drawing that is used as a template for starting new drawings. Up until this chapter you have started MICRO CADAM drawings by selecting FKey FILE and submenu /START/ to start a blank MICRO CADAM drawing. While there may occasionally be a reason to start a blank drawing, almost all new MICRO CADAM drawings should be started by calling a copy of a starter format template into memory, and then filing it onto the hard disk with a new name.

Starter formats have the following information predefined:

- Plot data has already been defined and has been tested to plot correctly on your printer or plotter (you may have to *fine tune* the plot data on the supplied starter formats so that the plots fit properly on your printer or plotter).

- The border outline and title block exist as a ditto on View 99. View 99 is a CADAM standard name for the auxiliary view that contains the border outline. The outline and title block are placed as dittos on view 99 so they may be conveniently *no shown* should you want to plot onto paper with preprinted title blocks and borders. Note that they title block text is placed as a MICRO CADAM Note in View 99; it is not placed as a ditto.

- View 99 has a scale of 1.0000 (because the outline of the border represents the actual size of the paper onto which it will be plotted).

- All text on the title block has predefined size, position, alignment, color and content.

- The drawing has been positioned on the electronic drawing area such that the title block can be seen when a drawing is first loaded into memory (i.e. called up).

- Auxiliary View PV has been repositioned to a location on the starter format where it would be used most often.

- (OPTIONAL): The related views, front view (View FV) and the side view (View SV), have already been started and positioned, ready for information to be

projected between views. The sample starter formats included with the MICRO CADAM software have these two views already started.

- Auxiliary Views, ready to be used for creating enlarged images of small details on a part, have already been created. On the included starter formats these views are called V1, V2 and V3.

- The units (i.e. inches, mm, ft, etc.) have been preset.

- The dimensioning standard has been preset.

The following sample starter formats have been included with the MICRO CADAM software:

·	STARTER A,IN	(8½" x 11") units are inches	|
·	STARTER B,IN	(11" x 17") units are inches	| ENGINEERING
·	STARTER C,IN	(17" x 22") units are inches	| A - D PAPER
·	STARTER D,IN	(22" x 34") units are inches	|
·	STARTER A4,MM	(210mm x 297mm) units are mm	|
·	STARTER A3,MM	(297mm x 420mm) units are mm	| ISO SIZES
·	STARTER A2,MM	(420mm x 594mm) units are mm	| A1 - A4
·	STARTER A1,MM	(594mm x 841mm) units are mm	|
·	STARTER D,FT	(2’ x 3’) units are ft	| ARCHITECTURAL
			| D SIZE

These starter formats can be found in the group,user **CAD,FORMAT**. Notice that they have a read only tag (i.e. RO) attached to them so they will not be inadvertently erased.

G) TO BEGIN A NEW DRAWING MICRO CADAM DRAWING BY USING A STARTER FORMAT:

To begin a new MICRO CADAM drawing by using a starter format follow these steps:

1. **Start the MICRO CADAM program.** Change to the drive and directory where MICRO CADAM is loaded. For example, change to **C:\MCADAM** if micro cadam is loaded on drive C.

2. Run the MICRO CADAM program by typing ***MCADAM*** and pressing the enter key on the keyboard.

3. Once the program loads, you will be presented with a display screen. Near the top of the display screen you will see the menu prompt ***Key group,user / Sel menu***.

4. **Go to the group,user where the starter formats are kept.** Key the group,user CAD,FORMAT. The menu prompt ***Key filename / Key page #*** appears.

5. Press the Y/N button on the mouse. A list of models in the current group,user appears on the display screen. The menu prompt ***Sel filename / Sel menu***. If necessary select submenu /FWD/BACK/ on the bottom menu to 'flip' through the display pages until you find the starter formats.

6. **Call up the starter format into memory.** Since you want to create a drawing with units of inches (i.e. IN), that will plot onto your narrow bed epson dot matrix printer (i.e A size plot), you decide you need the **STARTER A,IN** starter format. Select **STARTER A,IN** and the drawing is called from the hard disk and into computer memory. The drawing appears on the display screen.

7. **Change to your working group,user.** Select submenu /USER/. The menu prompt ***Key group,user / Sel menu*** appears. Type in **CAD,TRAIN** and press the enter key on the keyboard (this assumes you want to work in the user train).

8. **File the starter format with a different name.** Select submenu /FILE/. The menu prompt ***Key filename / YN same name*** appears. Key in the name you want the MICRO CADAM model to be called and press the enter key. (For example, key in **UPPER BRKT, MK**). The message ***Drawing filed*** appears near the top of the display screen.

9. **Work on the drawing.** You can now begin creating geometry on the drawing that is still

in memory. When you are finished creating the drawing, overfile it on top of the existing drawing.

H) A LISTING OF THE DIFFERENT PROGRAMS AFFECTING PLOTTING:

The different MICRO CADAM modules that are involved in plotting are listed below:

- The MICRO CADAM INSTALLATION program (i.e. mcinstall.exe to run) can be used to configure your computer for plotting.
- The MICRO CADAM DEFAULTS program (i.e. defaults.exe or mcopt.exe to run) can set plot parameters
- The MICRO CADAM INTERACTIVE program (i.e. mcadam.exe to run) FKey FILE /PLOT/ is used to add plot data to a drawing.
- The MICRO CADAM PLOT MODULE (i.e. plot.exe to run) is used to schedule plots.

I) PLOTTING TO A PRINTER:

When MICRO CADAM plots a drawing to a printer, it first sends the graphical information to a printer device driver which converts the plot data to a language the printer understands, and then the device driver sends information to the printer. Thus a printer driver acts as an intermediary between MICRO CADAM and the printer.

If you were sending your plot to an Epson FX80 dot matrix printer, the printer driver used will be **EPSON80.SYS**. Printer drivers are found in the config.sys file (in your root directory) and are loaded into the computer with a line such as:

```
DEVICE=C:\MCADAM\EPSON80.SYS
```

Printer drivers cannot handle line weights. If you have used some heavy, medium or light weight lines in your drawing, they will all appear one dot wide on the printer output.

Included with the software in this book are the shareware programs PrintCAD and PrintGL. These two programs convert hpgl files in memory so that they will plot on your printer. Line

weights and other hpgl attributes are duplicated on your printer. See the chapter on SHAREWARE BONUS UTILITIES for more information on the utilities.

J) PLOTTING TO A PLOTTER:

When MICRO CADAM plots a drawing to a plotter, it first sends the graphical information to a printer device driver which converts the plot data to a language the plotter understands, and then the device driver sends information to the plotter. Thus a plotter driver acts as an intermediary between MICRO CADAM and the plotter.

If you were sending your plot to an HP 7475A pen plotter, the plotter driver used will be **HPGL.SYS**. Plotter drivers are found in the config.sys file (in your root directory) and are loaded into the computer with a line such as:

```
DEVICE=C:\MCADAM\HPGL.SYS
```

Plotter drivers can handle line weights, so you will see light, medium and heavy weight lines plotter (assuming you plotter can handle at least 3 pens, that you have placed the light weight pen in slot #1, the medium weight pen in slot #2, the heavy weight pen in slot #3, and that you have configured MICRO CADAM to plot by line weight instead of color (see MCOPT in the chapter on UTILITIES).

The following files are found in the \MCADAM directory. They provide additional information on plotting to a printer, plotting to a plotter, and on hardware configurations and setup. Please read through the following files:

- CALCOMP.DOC
- HPGL.DOC
- HPGL2.DOC
- PLOTTER.DOC
- README.DOC

To read through these files use a utility such as PCTOOLS, or type the following command in the \MCADAM directory (replace with CALCOMP.DOC with the different file names):

```
TYPE CALCOMP.DOC | MORE
```

CHAPTER 29

ELECTRONIC PUBLISHING

There are many situations where you may want to plot your MICRO CADAM drawing to disk and bring the image into a word processor such as Wordperfect or Microsoft Word for a report or a proposal, or into Pagemaker or Ventura Publisher to create a newsletter.

MICRO CADAM has three different methods of capturing your drawing to a file on the hard disk.
They are:

- HPGL (Hewlett Packard Graphics Language)
- CGM (Computer Graphics Metafile)
- DXF (Drawing Exchange Format)

HPGL SETUP:

The HPGL.SYS driver is added to the config.sys file in the root directory of the workstations C: drive by using the following statement:

device=c:\mcadam\hpgl.sys (assumes MICRO CADAM installed on drive C)

Environment variables are added to the autoexec.bat file in the root directory of the workstations C: drive. Sample environment settings follow:

```
SET PAPER_SIZE=9x11
SET UNITS=in
SET PLOT_ID=7475
```

When you plot a MICRO CADAM drawing, a file with a name in the format *pltfile.n* will be created. The 'n' is a number (i.e. 1, 2, 3, etc.). Each time you run the plot program with the HPGL driver, the file number is incremented by one.

Should you want the file plotted to disk with the same name each time, you can add the following environment variable to the autoexec.bat file:

SET HPGL=filename

Please read the **HPGL.DOC** file in the \MCADAM directory for more information on the HPGL driver. You may import this HPGL file into your software package.

CGM SETUP:

The META.SYS driver is added to the config.sys file in the root directory of the workstations C: drive by using the following statement:

device=c:\mcadam\meta.sys (assumes MICRO CADAM installed on drive C)

Environment variables are added to the autoexec.bat file in the root directory of the workstations C: drive. Sample environment settings follow:

SET PAPER_SIZE=9x11
SET PLOTTER=Meta.sys

When you plot a MICRO CADAM drawing, a file with a name in the format *metafile.dat* will be created. Import this CGM file into your software package.

DXF SETUP:

MICRO CADAM drawings are converted to DXF format by using the MICRO CADAM DXF TRANSLATOR program. Import this DXF file into your software package. See MICRO CADAM UTILITIES in Chapter 30 for more information or running the DXF translator program.

CHAPTER 30

MICRO CADAM UTILITIES

MICRO CADAM includes several utilities that complement the base code. The following utilities are discussed in this chapter:

- The Data Manager
- The Rebuild Utility
- The Extract Utility
- The DXF translator
- The CGITEST Utility

The DATA TRANSFER module is not included with the FREE SOFTWARE (it is available commercially from your nearest MICRO CADAM reseller), It is discussed here to assist those who want information on exchanging MICRO CADAM drawings with Professional CADAM or Mainframe CADAM (i.e. HOST CADAM).

Chapter 1 explains the installation and setup of MICRO CADAM. It also shows you how to use the following utilities:

- MCTEST (Performs a system configuration and hardware test)
- MCINSTAL (Another way of configuring your system. It allows you to set up your system for variations that are not covered in the batch file configuration in Chapter 1).
- MCOPT (Configuring your system defaults).

Please see Chapter 1 for detailed information on how to use the MCTEST, MCINSTAL and MCOPT utilities.

THE DATA MANAGER

MICRO CADAM has several important advantages in the way that it handles the creation and storage of its drawings. MICRO CADAM drawings can have up to 20 characters, each drawing is stored in a group and user, and ASCII text may be attached to the drawing name and displayed on the screen (See Chapter 6 **CONCEPTS** for more information). In order to achieve these advantages, MICRO CADAM drawings are stored as hidden files (this is why the **CAD** directory on your disk *appears* empty) and are maintained by means of an index. MICRO CADAM files cannot be manipulated directly since each time a drawing is moved or copied, its index must be updated. The DATA MANAGER takes care of all this housekeeping.

The DATA MANAGER performs four basic functions:

1. SORT drawing files
2. Change drawing file attributes
3. Copy drawing files
4. Display drawing file names

STARTING THE DATA MANAGER:

You may start the data manager two different ways:

1. Change to the \MCADAM directory (e.g. enter **cd \MCADAM**) and then type **MCDMN** (and then press the enter key)
2. Change to the \MCADAM directory and type **MENU** (and then press the enter key). You will then be presented with the following menu:

Highlight **MICRO CADAM DATA MANAGER** and press the enter key.

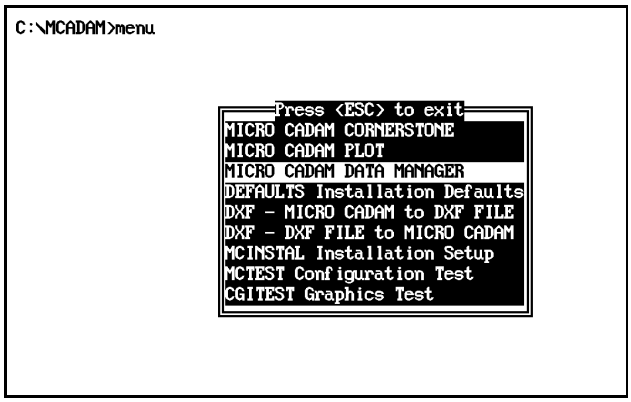

Regardless of which way you start the data manager, you will now be presented with the display screen shown at the right.

```
                    Data Management Utilities

                 Copyright 1993 by ALTIUM
                 1935 N. Buena Vista St.
                    Burbank, CA 91504
                 THIS IS A FREE VERSION
             OF MICRO CADAM CORNERSTONE 1.3C
          ***THERE ARE NO RESTRICTIONS ON USE***
            ALTIUM RETAINS OWNERSHIP OF THIS SW
                 ALL RIGHTS RESERVED


        1. Sort DRAWING file
        2. Change DRAWING file attributes
        3. Copy DRAWING file
        4. Display DRAWING file names

        Z. EXIT


        Key in a Number      [ENTER]
```

SORT DRAWING FILES:

To sort drawing files, type a **1** at the main DATA MANAGER screen and then press the enter key. you will now be presented with the following screen:

The screen shown at the right has already been *filled in*. The drive (i.e. C), the Group (i.e. CAD) and the user (i.e. FORMAT) have been entered. The different sorting options now appear. Type the number of the option you want and press the enter key and the drawing models will be sorted.

```
                    SORT of DRAWING File
Key in DRIVE (1 char.) for DRAWING File [ENTER]
C
Key in GROUP Name (4 chars.)        [ENTER]
CAD
Key in USER Name (6 chars.)        [ENTER]
FORMAT
Key in a number for SORT Type           [ENTER]
1. Ascending  order of PN/FN (20 ch.)
2. Descending order of PN/FN (20 ch.)
3. Ascending  order of PN    (16 ch.)
4. Descending order of PN    (16 ch.)
5. Ascending  order of FN    (4 ch.)
6. Descending order of FN    (4 ch.)
7. Ascending  order of File creation date
8. Descending order of File creation date
9. By Author (USER-ID) of File



    [PF1] to abort          [PF3] to restart          [PF9] to reenter
```

CHANGE DRAWING FILE ATTRIBUTES:

Select option 2 from the main DATA MANAGER display screen and the screen at the right will appear:

Type the option you want and press the enter key. Follow the instructions on the screens as they appear.

```
                Change DRAWING file attributes

        1. Delete PN,FN
        2. Change PN,FN
        3. Set Read-Only flag
        4. Reset Read-Only flag
        5. Define Password
        6. Reset Password

        Z. EXIT

        Key in a Number      [ENTER]

    [PF1] to abort          [PF3] to restart
```

COPY DRAWING FILES:

Select option 3 from the main DATA MANAGER display screen and the screen at the right will appear:

You may copy individual files, or you may copy an entire user, or an entire group to another location (i.e. another drive, user or group). Enter the number of the operation you want to perform and follow the instructions on the remaining screens.

```
                Copy DRAWING file

        1. Copy individual PN,FN or all PN,FN
        2. Copy by User name
        3. Copy by Group name

        Z. EXIT

        Key in a Number      [ENTER]

    [PF1] to abort          [PF3] to restart
```

DISPLAY DRAWING FILE NAMES:

Select option 4 from the main DATA MANAGER display screen and the screen at the right will appear:

You now have two options: you can choose to display all of the group and user names or you can display all of the model names in a specific group and user.

```
                    Display DRAWING file names


          1. Display GROUP and USER names
          2. Display PN,FN

          Z. EXIT









          Key in a Number      [ENTER]



     [PF1] to abort          [PF3] to restart
```

Should you decide to display all of the group and user names, after entering the drive you will see the display screen similar to that shown at the right.

```
          Display DRAWING file names
     [PF1] to abort          [PF3] to restart
           DRIVE = C  GROUP = CAD
   USER = DEMO      FORMAT    STDLIB    QSTART    TRAIN

           DRIVE = C  GROUP = SYS
   USER = SYMBOL









 [ENTER] to continue , [PF1] to abort
```

Should you decide to display all of the model names in a particular group and user you will see a display screen similar to that shown at the right.

```
          Display DRAWING file names
    [PF1] to abort            [PF3] to restart
    PN/FN   NAME      STATUS     DATE                TEXT DATA
 4 WW2 PLANES    ,      RW/P  93/269 18:24  P-40 WARHAWK, P-51C MUSTANG, JAP ZE
 4WD             ,      RO/P  93/269 13:23  SKELETON OF A V-8 POWERED JEEP
 ANIMATION       ,      RW    93/269 18:25  PAGE FWD THRU DETAILS
 BENCH GRINDER   ,      RW/P  93/269 18:25  EXPLODED VIEW OF A GRINDER
 BICYCLE         ,A1    RO/P  93/269 18:30  THE ORIGINAL MICRO CADAM BICYCLE
 BIKE            ,2     RW/P  93/269 18:31  BICYCLE: ISOMETRIC/SHIFT,BEARINGS,W
 ELECTRICAL SCHEM,ATIC  RW/P  93/269 18:31  ELECTRICAL SCHEMATIC  A CHNG 11/07/
 F-16            ,      RW/P  93/269 18:26  SIDE & FRONT VIEW OF AN F-16
 FLOOR PLAN      ,      RW    93/269 17:45  D - SIZE ERIC'S HOUSE PLAN
 FRONT ELEV      ,      RW/P  93/269 18:23  LARGE COLONIAL HOUSE
 GARAGE ADDITION ,      RO/P  93/269 11:10  PROPOSED GARAGE ADDITION
 HOLLYHILL       ,      RO/P  93/269 13:28  ARTIST CONCEPTION OF OLD HOUSE
 HOTROD          ,      RW/P  93/269 18:27  1929 PICKUP W/V-8 FORD ENGINE
 LOCOMOTIVE      ,      RW/P  93/269 18:21  CIRCA 1929 STEAMENGINE LOCO
 P-38            ,      RW/P  93/269 18:27  FRONT, TOP, & SIDE VIEW OF A P-38.
 PORSCHE         ,944   RW/P  93/269 18:33  FRONT VIEW OF A 944 PORSCHE
 SR-71A          ,      RW/P  93/269 18:28  THE BLACKBIRD, THE FASTEST, THE HIG

 [ENTER] for next screen, [PF1] to abort

PROCESS:  Display PN,FN              ( DRIVE / GROUP / USER )  C CAD  DEMO
```

THE REBUILD UTILITY

The rebuild utility rebuilds the drawing index files. In order to understand how the drawing index files work it is important to understand the MICRO CADAM file structure.

A typical MICRO CADAM file structure is shown below:

```
C:\
  └─ MCADAM ─
             └─ CAD ─
                     GROUPCTL.XXX  ──────── GROUP (CAD) Control file
                     TRAIN00.XXX   ────┐    USER (TRAIN) index file
                     TRAIN01.XXX   ────┘
                     MC010001.XXX  ──────── DRAWING #1 in user TRAIN
                     MC010002.XXX  ──────── DRAWING #2 in user TRAIN
                     DEMO00.XXX    ────┐    USER (DEMO) index file
                     DEMO01.XXX    ────┘
                     MC020001.XXX  ──────── DRAWING #1 in user DEMO
                     MC020002.XXX  ──────── DRAWING #2 in user DEMO
                     MC020003.XXX  ──────── DRAWING #3 in user DEMO
                     STDLIB00.XXX  ────┐    USER (STDLIB) index file
                     STDLIB01.XXX  ────┘
                     MC030001.XXX  ──────── DRAWING #1 in user STDLIB
                     MC030002.XXX  ──────── DRAWING #2 in user STDLIB
                     MC030003.XXX  ──────── DRAWING #3 in user STDLIB
                     MC030004.XXX  ──────── DRAWING #4 in user STDLIB
```

This file structure shows the following:

- MICRO CADAM is loaded on drive C

- MICRO CADAM is stored in the \MCADAM directory

- The MICRO CADAM group **CAD** is actually a subdirectory under the \MCADAM subdirectory. Each MICRO CADAM group is a DOS subdirectory under the \MCADAM directory.

- The **GROUPCTL.XXX** file maintains a list of MICRO CADAM **USERS** in the group. If you use a text editor to view the GROUPCTL.XXX drawing, the first USER listed will belong to the MC01????.XXX dwgs; the second USER to MC02????.XXX, etc.

- The **TRAIN00** and **TRAIN01** user index files maintain a list of drawings in the **USER** TRAIN.
  The **DEMO00** and **DEMO01** user index files maintain a list of drawings in the **USER** DEMO.
  The **STDLIB00** and **STDLIB01** user index files maintain a list of drawing in the **USER** STDLIB.

  The drawing list these files maintain maps the 20 character MICRO CADAM name to the 8.3 DOS name (i.e. MC010001.XXX ... etc.)

- The **MC010001.XXX** file (and all the others with similar names) are the actual MICRO CADAM drawings. The **'01'** in MC01????.XXX means that this drawing (and all other drawings with the MC01????.XXX name) belongs to the first USER (i.e. TRAIN). The **'02'** in MC02????.XXX means that this drawing (and all other drawings with the MC02????.XXX name) belongs to the second USER (i.e. DEMO).

Situations occasionally occur where the index files need to be rebuilt. The GROUPCTL.XXX file may no longer accurately reflect all of the existing users, or the user index files may no longer accurately reflect the drawings that exist in that USER.

Should someone delete an MC??????.XXX file manually (i.e. using a third party utility), or if there was a power failure while you were filing a drawing onto the hard disk, the file is no longer there, but the user index files still 'think' the file exists. When you are in MICRO

CADAM and have a list of drawings displayed on the screen ready to be selected, the drawings displayed are those that are listed in the user indexes. If you now select the deleted file and attempt to load it into memory you will receive a **'FILE OPEN ERROR'**. MICRO CADAM cannot find the MC??????.XXX file on disk.

Each MC??????.XXX file has embedded in its header the MICRO CADAM 20 character file name, and the user that it belongs to. This header is read during the rebuild process.

REBUILDING THE MICRO CADAM DATA BASE:

To rebuild the database, follow these steps:

1. If you are on a network, have everyone log off.

2. Change to the group you want to rebuild. For example, if corrupted indexes exist in the group,user **CAD,DEMO**, then change to the C:\MCADAM\CAD directory (assuming MICRO CADAM is loaded on drive C).

3. Type in the command **REBUILD** and press the enter key. You will be presented with the screen on the right. Press the 'Y' key to proceed with the rebuilding.

```
C:\MCADAM\CAD>rebuild


****************************************
MICRO CADAM DATABASE REBUILDING FACILITY
****************************************
R   E   B   U   I   L   D     P L U S
****************************************

        Copyright 1993 ALTIUM
        1935 N. Buena Vista Street
        Burbank, California 91504


WARNING!!! ************************************
    This program approved for use with any
    version of MICRO CADAM...
    However, this program will modify the
    MICRO CADAM database!  It is important
    that nobody else is accessing (via a network)
    drawings in this MICRO CADAM group.
*****************************************************

PROCEED WITH REBUILD? (Y/N)
```

4. That's it! Your data base index has now been rebuilt and will now list only those users and drawings currently on the system.

What happens behind the scene is that each MC??????.XXX file header is interrogated for the USER that it belongs to, and the MICRO CADAM 20 character file name. The GROUPCTL.XXX file and all of the user indexes are rebuilt.

Should there be an anomaly in the data base (i.e. should the rebuild process report that one

MC01????.XXX file belongs to group DEMO and another MC01????.XXX file belongs to the group FORMAT, rebuild cannot decide which USER to assign these drawings to, so it creates a 'generic' user called **USER01** or **USER02**, etc.

THE EXTRACT UTILITY

The EXTRACT utility reads the header on each of the MC??????.XXX files and reports on the USER containing the file, the 20 character MICRO CADAM file name, and the DOS 8.3 character name (i.e. the MC??????.XXX file name).

EXTRACTING INFORMATION FROM THE MICRO CADAM DATA BASE:

To extract information from the MICRO CADAM database, follow these steps:

1. Change to the group you want to extract the information. For example, if you want a listing of all files in group **CAD** then change to the \MCADAM\CAD directory.

2. Type in the command **EXTRACT** and press the enter key. You will be presented with the screen similar to that shown on the right.

```
*******************
E X T R A C T  PLUS!
*******************
                Copyright 1993 ALTIUM
                1935 N. Buena Vista Street
                Burbank, California, 91504
                      Serial 0308

Processing...Please Wait

*****************************************************************
The following MICRO CADAM USERS and DRAWINGS exist in this group:
*****************************************************************
     DEMO00       -->4WD                 (010001)
     DEMO00       -->HOLLYHILL           (010002)
     DEMO00       -->X-WING FIGHTER      (010003)
     DEMO00       -->GARAGE ADDITION     (010004)
     DEMO00       -->BICYCLE         A1  (010005)
     DEMO00       -->LOCOMOTIVE          (010006)
     DEMO00       -->FLOOR PLAN          (010007)
     DEMO00       -->FRONT ELEV          (010008)
     DEMO00       -->TRUE VIEW EXAMPLE   (010009)

C:\MCADAM\CAD>
```

3. That's it! You have now extracted information from the data base.

What happens behind the scene is that each MC??????.XXX file header is interrogated for the USER that it belongs to, and the MICRO CADAM 20 character file name.

USING THE EXTRACT AND REBUILD UTILITIES TO RECOVER FILES FROM BACKUP:

Each time you backup your system onto tape (or diskettes, or whatever) it is strongly suggested that you run (and save on disk or paper) the EXTRACT program on the GROUP just backed up. You will then have a mapping of the 20 character MICRO CADAM file name to the real 8.3 DOS file name. You will then be able to recover a single MICRO CADAM drawing from the list.

To recover a single drawing from backup follow these steps:

1. Determine the 20 character name for the MICRO CADAM drawing lost.

2. Using the 20 character file name from step 1 above, check your extract listing and find the real 8.3 MC??????.XXX file name.

3. Make a subdirectory called **TEMP** under the \MCADAM directory (i.e. \MCADAM\TEMP)

4. Copy the MC??????.XXX file (found in step #2) from your backup tape to the \MCADAM\TEMP directory.

5. Change to the \MCADAM\TEMP subdirectory (e.g. cd \MCADAM\TEMP).

6. Run REBUILD on this **TEMP** group.

7. That's it! Run MICRO CADAM, change to the TEMP group and call up the drawing. File it in a different GROUP,USER. You may then erase all files in the \TEMP subdirectory.

THE DXF TRANSLATOR

DXF stands for **DRAWING EXCHANGE FORMAT** and is a standard originally developed by Autodesk. Most CAD packages can import and export DXF files so DXF can be used as a means of transferring CAD information between different systems.

The DXF Translator for MICRO CADAM will convert drawings two ways:

- FROM A MICRO CADAM MODEL TO DXF (i.e. exporting to DXF)
- FROM DXF TO A MICRO CADAM MODEL (i.e. importing from DXF)

STARTING THE DXF TRANSLATOR:

You may start the DXF Translator two different ways:

1. Change to the \MCADAM\DXF directory (e.g. enter **cd \MCADAM\DXF**) and then type **MCDXF** or **DXFMC** (and then press the enter key)
2. Change to the \MCADAM directory and type **MENU** (and then press the enter key). You will then be presented with the following menu:

Highlight either **DXF - MICRO CADAM TO DXF FILE** or **DXF - DXF FILE TO MICRO CADAM** (depending on the direction you want to go) and press the enter key.

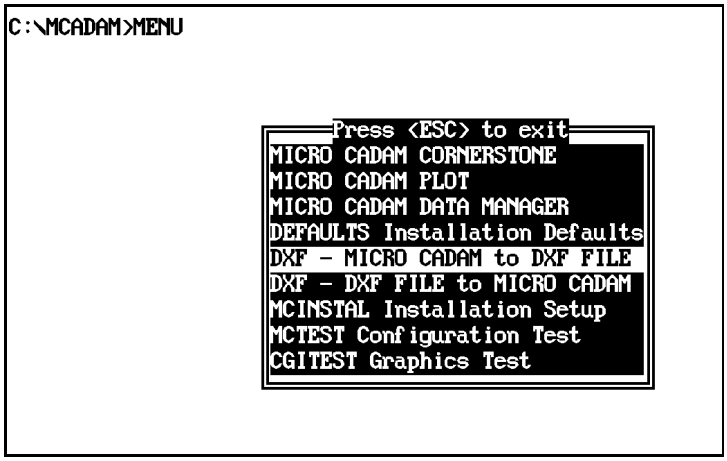

Regardless of which way you start the DXF Translator you will now be presented with the display screen shown at the right.

```
MICRO CADAM EXTERNAL FILE TRANSLATOR                    (C) 1993 ALTIUM 1.3C
          PRESS ANY KEY TO CONTINUE OR PRESS [ESC] TO ABORT

                    (C)COPYRIGHT 1993 BY ALTIUM
                        1935 N. Buena Vista St.
                           Burbank, CA 91504

                       THIS IS A FREE VERSION
                   OF MICRO CADAM CORNERSTONE 1.3C
                ***THERE ARE NO RESTRICTIONS ON USE***
                 ALTIUM RETAINS OWNERSHIP OF THIS SW
                        ALL RIGHTS RESERVED
```

Press any key to continue and the direction screen (shown at the right) will now be presented. Type in either a ’1’ or a ’2’ depending on the direction you want to go. Press the F10 key on your keyboard and the next screen will appear.

```
MICRO CADAM EXTERNAL FILE TRANSLATOR                    (C) 1993 ALTIUM 1.3C
                          ENTER ’1’ or ’2’

                    1. MICRO CADAM TO DXF FILE
                    2. DXF FILE TO MICRO CADAM

          ENTER THE NUMBER OF TRANSLATION DIRECTION:   1

ARROW KEYS - UP/DOWN    PRESS:[F10] TO CONTINUE  [F1] FOR HELP  [ESC] TO ABORT
```

The screen at the right is where you provide all the information the system needs to do the DXF translation. In this screen we are looking on drive C, Group CAD and User DEMO for the two MICRO CADAM files ’GARAGE ADDITION’ and ’X-WING FIGHTER’. They will be written to the DXF files ’GARAGE.DXF’ and ’XWING.DXF’ in the \MCADAM\DXF directory. Note that you should NOT provide the ’DXF’ extension on the file names. Also note that there are several translation options that allow you to customize your translation. Highlight

```
MICRO CADAM TO DXF FILE                                 (C) 1993 ALTIUM 1.3C
                ENTER THE MICRO CADAM MODEL NAME (PN,FN)

          SOURCE INFORMATION
                   SOURCE DRIVE      : C
                   MICRO CADAM GROUP : CAD
                   MICRO CADAM USER  : DEMO
                   OVERWRITE DXF(Y/N): N
                   BLOCK NAME METHOD (1/2/3): 3
                   TRANSLATE NOSHOW ENTITIES (Y/N): N
                   SUPPRESS ELEMENT COLOR (Y/N): N

   MICRO CADAM MODEL NAMES:                TARGET DXF FILE NAMES:
       1: GARAGE ADDITION ,      ------> 1: GARAGE
       2: X-WING FIGHTER  ,      ------> 2: XWING
       3:                        ------> 3:
       4:                        ------> 4:
       5:                        ------> 5:
       6:                        ------> 6:
       7:                        ------> 7:
       8:                        ------> 8:
       9:                        ------> 9:
      10:                        ------> 10:

ARROW KEYS - UP/DOWN    PRESS:[F10] TO CONTINUE  [F1] FOR HELP  [ESC] TO ABORT
```

these options and press the F1 key on your keyboard to display help on each item. When you are finished with this screen press the F10 key on your keyboard.

After pressing the F10 key a popup menu will appear (as shown on the screen at the right). Press the 'Y' key to save your changes and continue with the translation.

The translation will now take place. You will find the resulting DXF files in the \MCADAM\DXF directory.

That's it! Your drawings are converted.

```
MICRO CADAM TO DXF FILE                                    (C) 1993 ALTIUM 1.3C

          SOURCE INFORMATION
                   SOURCE DRIVE      : C
                   MICRO CADAM GROUP : CAD
                   MICRO CADAM USER  : DEMO
                   OVERWRITE DXF(Y/N): N
                   Press [ESC] to return to program.
              Do you want to save your changes? [Y/N]
           Y[es] - Continue and save any default changes.
           N[o] - Continue but do not save default changes.
   MICRO CA                                                              S:
       1: GARAGE ADDITION ,      ------> 1: GARAGE
       2: X-WING FIGHTER  ,      ------> 2: XWING
       3:                        ------> 3:
       4:                        ------> 4:
       5:                        ------> 5:
       6:                        ------> 6:
       7:                        ------> 7:
       8:                        ------> 8:
       9:                        ------> 9:
      10:                        ------> 10:

ARROW KEYS - UP/DOWN    PRESS:[F10] TO CONTINUE  [F1] FOR HELP  [ESC] TO ABORT
```

GOING IN THE OTHER DIRECTION:

Should you want to convert a DXF file into a MICRO CADAM file, select option #2 on the direction screen. The screen at the right is displayed. Fill out the screen and press the F10 key.

Note that you must either copy the DXF files into the \MCADAM\DXF directory before starting the translation, or provide a path (i.e. A:\TEST) for the DXF files on this screen.

```
DXF FILE TO MICRO CADAM TRANSLATOR                         (C) 1993 ALTIUM 1.3C
                        ENTER A DXF FILE NAME

        TARGET INFORMATION:
                 TARGET DRIVE          : C
                 MICRO CADAM GROUP     : CAD
                 MICRO CADAM USER      : DXF
                 OVERWRITE MODELS (Y/N): N

               EXPLODE DIMENSIONS (Y/N): N
               CONVERT POLYLINES TO LINES (Y/N): N

  DXF FILE NAMES:                          MICRO CADAM MODEL NAMES:
 1: DXFSAMPL              ------>         1: MICROCADAM      1234
 2:                       ------>         2:
 3:                       ------>         3:
 4:                       ------>         4:
 5:                       ------>         5:
 6:                       ------>         6:
 7:                       ------>         7:
 8:                       ------>         8:
 9:                       ------>         9:
10:                       ------>        10:

ARROW KEYS - UP/DOWN    PRESS:[F10] TO CONTINUE  [F1] FOR HELP  [ESC] TO ABORT
```

Do not type the DXF extension of the file name on this screen.

DXF HINTS, TIPS, COMMENTS AND SUGGESTIONS:

1. If you are converting a large DXF file into MICRO CADAM drawings, the DXF Translator will automatically create multiple MICRO CADAM drawings as needed.

2. When a DXF file is translated to a MICRO CADAM drawing, it will automatically appear with units of inches. If the original DXF file was also in units of inches, everything will translate correctly. However, if the original DXF file was created in units of feet, a DXF unit of one foot will become a MICRO CADAM unit of one inch and the resulting drawing will be 1/12 of the correct size.

   To correct the drawing to the proper size it is necessary to use FKey GROUP, /TRAP/, /TRAPOUT/ and then /TRANSLATE/ and /SCALE/ (with a scale of 12) to make the geometry 12 times larger. (See FKey GROUP in Chapter 18 for details.)

3. Some CAD packages do not have auxiliary view scale capability. They must draw everything full size and with a scale of 1. This means if you are drawing a building outline your drawing may be 1200" x 1496", and your notes will be perhaps 48" high so that you are able to read them when looking at the entire drawing.

   MICRO CADAM uses auxiliary view scale to shrink the "picture" to fit onto your border outline drawing. The geometry is still drawn full size, but the picture is smaller. MICRO CADAM notes are drawn at an **ABSOLUTE SIZE**, regardless of the auxiliary view scale. This means that if you create a note 1/4" high, it will be 1/4" high regardless of the auxiliary view scale (just like on a paper drawing!).

   After you DXF a drawing into MICRO CADAM, it is not unusual to find notes that are 12’ high. They were drawn 12’ high on the original drawing and are still 12’ high when brought into MICRO CADAM. It is necessary to use FKey NOTE, /CHG/ and /SIZE/ to change these notes to a MICRO CADAM note with an absolute size.

THE CGITEST UTILITY

The CGITEST Utility exercises your graphics system. To run the CGITEST Utility change to the \MCADAM directory, type **CGITEST** and press the enter key. Follow the screen prompts.

DATA TRANSFER

MICRO CADAM DATA TRANSFER is a commercial product available from your local MICRO CADAM reseller. It is mentioned here to assist those who want to send or receive MICRO CADAM CORNERSTONE drawings between Professional CADAM and Mainframe CADAM.

CADAM software is used on three levels:

- MICRO CADAM (DOS and Unix systems)
- Professional CADAM (Unix systems)
- Mainframe CADAM (Mainframe computers)

All three levels of CADAM can convert a CADAM drawing to a special neutral file called a NURESTOR file. This NURESTOR file is the mechanism by which CADAM drawings are transferred between the three levels of CADAM.

For example, to send MICRO CADAM drawings to Mainframe CADAM, run the Data Transfer Module and write your MICRO CADAM models into a NURESTOR file. Upload this file to Mainframe (your system people can help you) and reblock it (the block size is different for DOS and UNIX systems. The reblocking utility is included with the MICRO CADAM DATA TRANSFER diskettes.) The Mainframe CADAM NURESTOR utility is then run and the MICRO CADAM files are now available on Mainframe CADAM.

To download files from Mainframe CADAM to MICRO CADAM perform the steps in reverse.

You may also use a 3270 card and direct connect your DOS system to the HOST. Files can then be transferred interactively.

Data Transfer to Professional CADAM is similar. The reblocking utility is not needed here.

See FKey SYMBOL in Chapter 24 for information concerning symbol table compatibility.

CHAPTER 31 SHAREWARE BONUS UTILITIES

WHAT IS SHAREWARE?

"Shareware" is copyrighted software which is distributed by authors through bulletin boards, on-line services, disk vendors, and copies passed among friends. It is commercial software which you are allowed to try out before you pay for it. SHAREWARE PROGRAMS ARE FREE TO TRY---THEY ARE NOT TO FREE TO KEEP!

The three utilities, PRINTCAD, PRINTGL and Q387 provided on the diskettes included with this book are shareware.

PRINTCAD AND PRINTGL LICENSING:

For PRINTCAD and PRINTGL please read the licensing restrictions contained in the documentation files in the \MCADAM\PRINTCAD and \MCADAM\PRINTGL directories.

The following is a licensing and registration excerpt from the documentation file 'PCAD.DOC' in the \MCADAM\PRINTCAD directory. It is reprinted here with the permission of the author, Cary Ravitz.

p-3

License and Registration ----------

PrintCAD is provided as is. There are no warranties expressed or implied. PrintCAD is a swapping resident program that may have problems with unusual environments.

PrintCAD is copyrighted by Ravitz Software Inc. You may copy PrintCAD only for use under this license agreement.

PrintCAD is distributed as shareware. You may use PrintCAD without charge on a trial basis to determine its suitability for you. If you continue to use it after your evaluation, you must purchase a registered copy for $49. This registration covers use by a single person (on multiple computers) or installation on a single computer (may be used by a group of people). There is no cost to use a later

1. version after registering any 1.** version.**

You may distribute PrintCAD as a stand alone product if you keep the entire package together, unchanged, including this license explanation, and do not charge more than $10. You may not distribute PrintCAD as part of another product.

To purchase a registered copy of PrintCAD, send your name, address, and $49 check to:

Ravitz Software Inc.
P.O. Box 25068
Lexington, KY 40524-5068
USA

You will be sent a printed manual and disk (always the latest version). Please specify 3.5 or 5.25 inch disk. If you previously registered PrintCAD, you may send $15 to get a current disk and manual.

The price for multiple licenses is $49 for the first copy (with disk and manual) and thereafter $40 per copy with disk and manual or $25 per copy without disk or manual.

For users outside the USA, please make checks payable in US dollars, and except for Canada, please use a check from a US bank if possible. Don't forget to include your country in your address.

If you register through a business, be sure to include your name.

What this basically says is that you may **EVALUATE** the PRINTCAD program at no charge. If you continue using it after the evaluation period, you **MUST** purchase a license for $49 US.

The licensing agreement for PRINTGL is similar. Please read the documentation file in the \MCADAM\PRINTGL directory.

Q387 MATH COPROCESSOR EMULATOR LICENSING:

Q387 is written by a different person and has a different licensing agreement. It is reprinted here with the permission of the author:

We distribute Q387 as what might be called "protected shareware". The distributed program is the full working version, except that it runs for 20 minutes at a time before it does a DOS terminate of an application. This way, at little or no cost to you, you may fully evaluate the performance of Q387 for yourself. Also, upgrading is quick and easy. You may run the demo as much as you please, and it will satisfy the needs of many people who only need it for short periods of time. If you are satisfied with the performance of Q387 and need it to run for longer than 20 minutes, we will, for a fee of $25 (see below for additional options), provide you with a "Run Code" which allows Q387 to run unimpeded. Q387 is not copy protected, but the Run Code will only work on one computer. We feel that this arrangement is a reasonable compromise between your need to verify the integrity of Q387 and the need to support this kind of work.

This says you may use the unlicensed version of Q387 indefinitely at no cost. It will run for 20 minutes at a time before it does a DOS terminate of an application (i.e. it kills your application and returns to DOS). This means you have to file your drawing, exit MICRO CADAM, and then restart it again every 20 minutes. Should you wish to upgrade to a licensed version, simply contact the author and pay the $25 fee with your mastercard, and he will provide you with a "Run Code" which will allow the software to run indefinitely.

WHAT IS PRINTCAD?

PrintCAD is a pen plotter emulator that acts as a printer driver for MICRO CADAM. It lets you **PLOT** a MICRO CADAM drawing directly onto a printing device. In other words, it makes your printer act like a plotter.

PrintCAD is an optional utility. You DO NOT NEED to use it to output your drawings onto a printer (MICRO CADAM comes with printer drivers included). It does however provide many advantages.

When plotting a MICRO CADAM drawing to a printer without using PrintCAD, light medium and heavy lines are all drawn the same weight (i.e. one dot wide).

When sending a MICRO CADAM drawing to a printer (with PrintCAD installed), the plotter emulation allows lines to be plotted light, medium or heavy weight. This is because PrintCAD makes your printer 'think' it is a plotter. Run the MCOPT program and check that MICRO CADAM is configured to plot by line weight and not by color.

PrintCAD also provides additional flexibility, such as pen width, shading, and color (with color mixing), and paper size, orientation, magnification, and positioning. PrintCAD uses the best graphics modes available for each printer that it supports.

CONFIGURING YOUR SYSTEM FOR PRINTCAD:

To configure your system for PrintCAD, follow these steps:

1. **MAKE SURE YOUR SYSTEM HAS EXTENDED OR EXPANDED MEMORY AVAILABLE.** PrintCAD is a swapping resident program that uses 5K of base memory and 400K of EMS or XMS memory. EMS and XMS are expanded and extended memory management protocols that are typically set up with memory management software such as HIMEM and EMM386, or 3rd party software. If you have a computer with extended or expanded memory hardware, you need to install such a driver to use it as EMS or XMS memory.

   For example, to convert your extended memory to XMS memory, place the line **DEVICE=C:\DOS\HIMEM.SYS** at the top of your config.sys (if you have DOS 5.0 or DOS 6.0). Your system will now have XMS (i.e. extended) memory available.

To convert some of your extended memory to 1024K of EMS memory, place the lines **DEVICE=C:\DOS\HIMEM.SYS** and **DEVICE=C:\DOS\EMM386.EXE 1024** at the top of your config.sys (if you have DOS 5.0 or DOS 6.0). Your system will now have 1024K of EMS (i.e. expanded) memory available.

If your system does not have extended or expanded memory you can use the PrintGL utility (it performs the same actions, but is a standalone utility that does not require any extended or expanded memory, and runs in 640K of base memory.

2. **MAKE SURE THAT MICRO CADAM IS USING THE HPGL DRIVER.** Check your config.sys file. It should be similar to the following:

```
DEVICE=C:\DOS\HIMEM.SYS
DOS=HIGH
FILES=20
BUFFERS=20
SHELL=C:\COMMAND.COM /E:384 /P
DEVICE=C:\MCADAM\DRIVERS\MSMOUSE.SYS /G:MOUSE
DEVICE=C:\MCADAM\DRIVERS\IBMVGA12.SYS
DEVICE=C:\MCADAM\DRIVERS\HPGL.SYS /G:PLOT
DEVICE=C:\MCADAM\DRIVERS\GSSCGI.SYS
BREAK=ON
```

Notice that the HPGL.SYS line is highlighted in bold.

Also notice that the **HIMEM.SYS** driver is present so that extended memory is available. (other parts of your config.sys file may look different depending on which drivers you are using)

3. **MAKE SURE THE HPGL ENVIRONMENT COMMANDS ARE PRESENT IN YOUR AUTOEXEC.BAT FILE:**

Make sure the following environment commands are located in the autoexec.bat file:

SET PLOT_ID=7475

SET HPGL=TEST.PLT (plots a MICRO CADAM drawing to disk as an HPGL file called TEST.PLT)

SET PAPER_SIZE=11x17 (provides paper size information to the HPGL driver...enter your own paper size here. Note that the area being plotted must fit onto this paper size. Do not make this larger than the maximum size paper your printer can use).

(NOTE: SEE THE HPGL.DOC FILE IN THE \MCADAM DIRECTORY FOR DETAILED INFORMATION ON THE HPGL.SYS DRIVER AND OPTIONS).

4. **MAKE SURE THE PCAD COMMAND LINE IS PRESENT IN THE AUTOEXEC.BAT FILE:**

For example, let's assume you have an Epson LQ wide body printer. Place the following command line in the autoexec.bat file in your root directory:

PCAD /P*.PLT /WABC /FT* /MF.99 /L10 16 .4 .25 /J27 67 0 17.

The **/P*.PLT** tells PrintCAD to sit in memory and look for any file with the extension PLT trying to write to disk. It will then capture this file and process it to the printer.

The **/WABC** tells PrintCAD the line weight to use for LIGHT, MEDIUM and HEAVY.

The **/FT*** tells PrintCAD to convert the captured file to print onto an Epson 24 pin printer at 360 x 360 dpi (requires 4 passes). Select the proper code for your printer.

The **/MF.99** tells PrintCAD to fit the drawing to the paper and use a .99 magnification factor. Do not use the fit parameter if you want your drawing plotted to scale.

The **/L10 16 .4 .25** and **/J27 67 0 17** are special codes that allow a 10 x 16 print on 11 x 17 paper.

See the PCAD.DOC file in the \MCADAM\PRINTCAD subdirectory for information on the other parameters.

5. **THAT'S IT!** Now try and plot a drawing. After you select the drawing to be plotted you will hear a beep. This is normal and confirms that PrintCAD is working.

What happens behind the scenes is that as soon as you select a drawing to plot from the MICRO CADAM screen, the HPGL.SYS driver will try and file the plot file **TEST.PLT onto the disk.** PrintCAD sits in memory (i.e. it is a TSR) waiting for any file with the PLT extension to attempt to write onto the hard disk (i.e. this is configured with the /P*.PLT option). When it finds a file

trying to do this, it captures the file and rasterizes it for the printer.

Note that the installation and setup manual (i.e. Chapter 1) contains two sample PrintCAD configurations. Customize the PCAD command line to reflect your configuration.

WHAT IS PRINTGL?

PrintGL does exactly the same as PrintCAD, but runs standalone in the lower 640K of computer base memory. It does not require any extended or expanded memory. Please see the documentation file in the \MCADAM\PRINTGL directory for more information.

PrintGL is an optional utility. You DO NOT NEED to use it to output your drawings onto a printer (MICRO CADAM comes with printer drivers included). It does however provide many advantages.

When plotting a MICRO CADAM drawing to a printer without using PrintGL, light medium and heavy lines are all drawn the same weight (i.e. one dot wide).

When using PrintGL to send a MICRO CADAM HPGL plot file to a printer lines can be plotted light, medium or heavy weight. This occurs because PrintGL makes your printer 'think' it is a plotter. (Make sure that your default MCOPT plotting option is configured by line weight, not color.)

Like PrintCAD, PrintGL also provides additional flexibility, such as pen width, shading, and color (with color mixing), and paper size, orientation, magnification, and positioning. PrintCAD uses the best graphics modes available for each printer that it supports.

CONFIGURING YOUR SYSTEM FOR PRINTGL:

To configure your system for PrintGL, follow these steps:

1. **MAKE SURE THAT MICRO CADAM IS USING THE HPGL DRIVER.** Check your config.sys file. It should be similar to the following:

   FILES=20
   BUFFERS=20
   SHELL=C:\COMMAND.COM /E:384 /P
   DEVICE=C:\MCADAM\DRIVERS\MSMOUSE.SYS /G:MOUSE
   DEVICE=C:\MCADAM\DRIVERS\IBMVGA12.SYS
   DEVICE=C:\MCADAM\DRIVERS\HPGL.SYS /G:PLOT
   DEVICE=C:\MCADAM\DRIVERS\GSSCGI.SYS
   BREAK=ON

   Notice that the HPGL.SYS line is highlighted in bold.

2. **MAKE SURE THE HPGL ENVIRONMENT COMMANDS ARE PRESENT IN YOUR AUTOEXEC.BAT FILE:**

   For example, make sure the following environment commands are located in the autoexec.bat:

   SET PLOT_ID=7475

   SET PAPER_SIZE=11x17 (provides paper size information to the HPGL driver...enter your own paper size here. Note that the area being plotted must fit onto this paper size).

   (NOTE: SEE THE HPGL.DOC FILE IN THE \MCADAM DIRECTORY FOR DETAILED INFORMATION ON THE HPGL.SYS DRIVER AND OPTIONS).

3. **PLOT YOUR DRAWING** Now try and plot a drawing. After you select the drawing to be plotted from the display screen, you will see the hard disk light turning on and off. Your plot file is being written to the hard disk with the name **pltfile.n**. Thus, if you plotted three files onto disk, they would be called pltfile.1, pltfile.2 and pltfile.3.

4. **EXIT MICRO CADAM AND START PRINTGL** Exit MICRO CADAM and change to the \MCADAM\PRINTGL directory. To run PrintGL enter the command **PMI** and press the enter key. (PMI is short form for the PrintGL Menu Interface and is a way of running PrintGL by menu, instead of by command line).

You will now see the display page shown at the right. Read the PRINTGL.DOC file in the \MCADAM\PRINTGL directory for more information on using this utility.

```
PrintGL Menu Interface 1.26        (C) Copyright Ravitz Software Inc. 1990,1992
1 ------------------------------------------------------------------------------
Run PrintGL   plotfile       magnification  pen color  window/margins  temp file
Alt config    plot page      origin/rotate  pen shade  form feed       other
eXit          destination    position       pen width  box
save configs  output format                             tiling
menu config   modify output  scaling pnts               copies
create BAT
==============================================================================
clear plotfile list                                  point.plt
file: *.plt                                          ptcmnd.plt
file:                                                ptdiag.plt
file:                                                sample.plt
file:                                                spccmnd.plt
file:
file:
file:
file:
file:
file:
file:
file:
file:
file:
file:
file:
file:                                  ↓
======= ↑↓ move cursor = Space select = Enter finished = Esc cancel =======
```

WHAT IS Q387 ?

Q387 is a math accelerator and a math coprocessor emulator. MICRO CADAM requires a math coprocessor to run.

Should your computer be a 386 or 486 and not have a math coprocessor installed, you may use Q387 to emulate the math coprocessor in memory. Q387 is a TSR (i.e. a program that remains in memory). After you run it, your computer will "think" it has a math coprocessor and will run MICRO CADAM with no problem.

The version of Q387 that is supplied with this book is a shareware version that will run for 20 minutes before terminating and dumping you to your DOS prompt. Should you want this program to run permanently, phone the author, give him your credit card number and for US $25 he will give you a code that will eliminate the 20 minute timer and permit Q387 to run permanently.

Should you have a math coprocessor socket in your computer, you also have the option of purchasing a real math coprocessor and installing it. I suggest that you try Q387 first and see if you are happy with it.

Requirements -

- o 386SX, 386DX, 486SLC, 486SX based computer, IBM PC or compatible, with at least 1.5 Megabytes total memory.

- o Q387 uses about 340k bytes of extended memory.

- o A 386 compatible Expanded Memory Manager (EMM), such as EMM386.EXE (comes with DOS 5.0 and Windows 3.1), QEMM386, 386MAX, or the EMM386.SYS that comes with Dr. DOS 6.0.

CONFIGURING YOUR SYSTEM FOR Q387:

To configure your system for Q387 follow these steps:

1. **MAKE SURE YOUR SYSTEM HAS EXPANDED MEMORY AVAILABLE.**

   DEVICE=C:\DOS\HIMEM.SYS
   DEVICE=C:\DOS\EMM386.EXE 512
   DOS=HIGH,UMB
   FILES=20
   BUFFERS=20
   SHELL=C:\COMMAND.COM /E:384 /P
   DEVICE=C:\MCADAM\DRIVERS\MSMOUSE.SYS /G:MOUSE
   DEVICE=C:\MCADAM\DRIVERS\IBMVGA12.SYS
   DEVICE=C:\MCADAM\DRIVERS\HPGL.SYS /G:PLOT
   DEVICE=C:\MCADAM\DRIVERS\GSSCGI.SYS
   BREAK=ON

   The two lines **DEVICE=C:\DOS\HIMEM.SYS** and **DEVICE=C:\DOS\EMM386.EXE 512** convert your some of your extended memory to 512K of EMS memory. Your system will now have 512K of EMS (i.e. expanded) memory available and will now be able to run Q387. (NOTE: See you DOS manual should you have difficulty loading and running EMM386.)

2. Add the following line to your autoexec.bat:

   C:\MCADAM\Q387\Q387.EXE

   When you reboot your computer, you will have a math coprocessor available, and will then be able to run the MICRO CADAM FREE SOFTWARE.

CHAPTER 32 COMMERCIAL VERSIONS OF MICRO CADAM

The FREE MICRO CADAM software included with this book is very capable and powerful. Most people will use it productively for many years. There will be some users who start receiving the **MODEL FULL** message more frequently, or who would like new features and functions, yet still have the speed, ease of use and capability of MICRO CADAM. The commercial versions of MICRO CADAM provide a growth path for you. All of your existing MICRO CADAM CORNERSTONE models can be called up with the commercial versions (i.e. upward compatibility is guaranteed!).

A listing of the various MICRO CADAM modules available at the time of printing, a brief description, and a summary of their capabilities is provided below.

MICRO CADAM PLUS R14:

MICRO CADAM PLUS is the enhanced version of MICRO CADAM. Model size is greatly enhanced, overlay capability, areafill, and additional line styles are only a few of the many enhancements provided. The MICRO CADAM PLUS base product package includes the following modules:

- MICRO CADAM PLUS
- Data Manager: Provides model management capabilities for the MICRO CADAM user, and serves as a common interface to various translators, applications and utilities.
- External File Translator This is a bi-directional translator between MICRO CADAM models DXF files. (i.e. *.DXF files)
- Direct File Translator This is a bi-directional translator between MICRO CADAM models and Autodesk's AutoCAD drawing file format (i.e. *.DWG drawings)

The following is a list of enhancements you will acquire by upgrading from the MICRO CADAM FREE software to the commercial version of MICRO CADAM PLUS R14:

1. Model size increases to 384,000 words (CORNERSTONE has 16,000 word model size).

2. Overlay up to 200 models. (CORNERSTONE does not have overlays) Overlays allow you to 'attach' separate MICRO MODELS to a PARENT drawing. You can work on one model at a time, or on all models at the same time.

3. Number of detail pages and auxiliary views increases to 999 (CORNERSTONE has 63)

4. Number of colors increases to 120 (CORNERSTONE has 11). Slider bar interface to modify a color's RGB values.

5. Viewports have been added. This means that you can divide your screen up into 2, 3, or 4 viewports, and in addition have a popup viewport (that can be placed anywhere) for a total of 5 viewports. Each viewport can moved and sized independently, and geometry can be drawn between viewports.

6. Interactive plotting supported from within the CADAM session (no need to exit the CADAM program, then start the plot module).

7. **Translations:**

   a. Can ***read*** and ***write*** AutoCAD *.dwg files directly.
   b. Bi-directional conversion between DXF and MICRO CADAM drawings.
   c. Bi-directional IGES translator includes support for 2d entities. Flavourings are provided for industry subsets and competing CAD products.

8. Support for wildcards.

9. User defined PN,FN

10. Buffer Plot/Screen Dump capability

11. Plot formats attached as per Mainframe CADAM

12. Dynamic pre-select entity highlight (the line highlights as you move the cursor around...so you can see what you would select before you press the button.

13. Dynamic cursor for WINDOW /BOX/, GROUP /TRAP/ YN Rectangle, Raster /ERASE/

14. Color Raster capability (for 8 bit color raster files). You may have raster and vector on the same MICRO CADAM drawing. Raster import support of MicroSoft BMP, PCX, XWD, GIF, Sun PIXRect. Also Raster support of LZW compression of TIFF files (in addition to Group 3 and 4 compression formats). Support for TIFF 6.0 specification. Raster preview window.

15. Interactive ability to select target output device (plotters)

16. NOTE /Custom Note/ function. (like a standard library for notes!)

17. Analysis across views

18. Erase across views

19. Relimit to individual elements of a symbol or ditto

20. Create a circle tangent to any three elements.

21. Create splines, modify them, and plot their characteristics

22. Detail pages can have names. Dittos and uses can be accessed by these names.

23. WINDOW /ALL/, WINDOW /VIEW/ and /WINDOW /GROUP/

24. GROUP /GROUP/ (group all of your circles, lines, or notes...etc.)

25. Select + YN buttons activate popup menu (in addition to the F1 key)

26. F5 single key display interrupt. The single F5 key on the computer keyboard will now interrupt the display processing in addition to CONTROL-BREAK.

27. Variable text symbols (have the same symbol, but edit the text on it. For example have a surface finish symbol and type in the finish you want).

28. ACCESS IUE (an interactive programming interface to your CADAM database).

29. Multiple dimensioning standards (STANDARD, ISO, ANSI, IBM, ...)

30. CSC (i.e. CADAM SYSTEMS COMPANY) support. CSC is the Japanese version of MICRO CADAM. CADAM has almost half of the CAD market in Japan. By using the CSC conversion you can receive MICRO CADAM drawings from Japan, or send your files to them.

31. Batch plotting capability.

32. **Dimensions:**

    a. Underline out-of-scale dimensions
    b. Compact Fractions (i.e. like 1½)
    c. Basic Dimensions

33. **Line Styles:**

    a. Eighteen new line styles
    b. Pen width can be added to any line.

34. **Line Widths:**

    a. Up to 239 different widths defined in one CADAM model
    b. Range of width sizes from .001" to 999"
    c. Ability to turn display widths on/off
    d. Square/Round/Flat ends.

35. **Operational Macro:**

    a. Record attention sequence
    b. Define Variables (e.g. WIDTH @Width of bracket = 5.6)
    c. Insert Pauses
    d. Arithmetic expressions (e.g. ANG = ASIN((WIDTH/2-3/8)**2)
    e. Store as editable ASCII file
    f. Replay from list w/comments

36. **New interactive Data Manager:**

    a. Multiple dynamic windows
    b. User orientated task-driven operation philosophy.

MICRO CADAM DATA TRANSFER:

MICRO CADAM Data Transfer is the utility for exchanging MICRO CADAM model data with host CADAM and PROFESSIONAL CADAM models. The Data Transfer has been integrated completely within both MICRO CADAM PLUS and MICRO CADAM Data Manager. Files can be retrieved or filed on the host interactively during the design process.

MICRO CADAM LDX:

MICRO CADAM LDX is a library management and data extraction tool for MICRO CADAM users. It provides increased productivity to MICRO CADAM PLUS users through component definition and manipulation, hierarchy control, library management, attribute processing, data extraction, report generation, and design rule implementation.

MICRO CADAM LDX allows users to define, retrieve, and manipulate components. Users define their own components as groups or combinations of existing geometric elements in a MICRO CADAM model. Once created, components can easily be moved, copied, deleted, and manipulated.

Components may be used to create a hierarchy of objects or parts within a MICRO CADAM model. The hierarchy provides associativity between components in design. Most manufactured objects are assembled from a number of existing smaller parts. MICRO CADAM LDX's component hierarchy provides a method of understanding the dependencies of sub-assemblies within a given design and optimizing their use within the overall design.

Attributes can be attached to both existing MICRO CADAM entities and components that have been created with MICRO CADAM LDX. The user can interactively enter attributes or reference attributes from external database files.

MICRO CADAM LDX automatically generates user-formatted Bill of Materials and parts lists from the component and attribute information contained in a set of drawings. The reports can be output to files suitable for import into external databases, or output the reports to MICRO CADAM models.

MICRO CADAM IGES:

MICRO CADAM IGES provides bi-directional translation capabilities between MICRO CADAM models and the IGES specification. The IGES specification is an industry standard for exchanging CAD/CAM data and provides the ability to share MICRO CADAM design information with both competitive and complementary applications.

MICRO CADAM ACCESS:

MICRO CADAM Access is the development toolkit for MICRO CADAM. It provides both an interactive and a batch programming interface. The Access toolkit provides the opportunity for developers to create new applications, to develop custom utilities, and to integrate existing applications with MICRO CADAM PLUS. These programs can be developed in either the C or FORTRAN programming languages.

MICRO CADAM ALTERNATE CHARACTER SETS:

MICRO CADAM Alternate Character Sets provides for multiple international characters to be used to annotate MICRO CADAM models. It allows users to share MICRO CADAM design information across an enterprise network that can span multiple countries, continents and languages.

MICRO CADAM FUNCTION KEY BOX:

The MICRO CADAM Function Key Box is a hardware attachment that provides rapid selection of MICRO CADAM PLUS function keys. The Function Key Box is used to increase user productivity.

MICRO CADAM VIEW:

MICRO CADAM VIEW is a view-only and mark-up tool for MICRO CADAM users. A user may view MICRO CADAM models, check them, query them, or extract information from them. MICRO CADAM View users may also red-line or mark-up the original design model by adding notes and/or arrows with attached notes to a mark-up model. The user may then use the mark-up model as a reference to make changes in the original design model.

HARDWARE PLATFORMS:

MICRO CADAM PLUS runs on both DOS and UNIX platforms. The drawing files are binary compatible (this means a drawing created on any one of the platforms can be called up on any of the others).

DOS PLATFORMS: MICRO CADAM PLUS runs on all DOS platforms. DOS 5.0 or later is required.

UNIX PLATFORMS: MICRO CADAM PLUS runs on the following UNIX platforms:

· IBM RISC System 6000 with AIX 3.2.4 or higher

· SUN SPARCstation with Solaris 2.2 or higher

· HP Apollo 9000 Series 700 workstation with HP-UX 9.01 or higher

· Silicon Graphics IRIS with IRIX 5.1 or higher

CHAPTER 33 HINTS, TIPS AND SUGGESTIONS

GENERAL:

1. Always read the 2nd line down from the top of the screen. The system is giving you a list of the things you can do.

2. When selecting elements, be aware that the menu (on the second line down from the top of the screen) will change to something different (i.e. it will appear to 'flash') when you have successfully selected something. Be aware of this flash as you select elements. If you 'think' you have selected an element (and missed it) you will then be out of sequence on your roadmap and unexpected things will happen.

3. When selecting points **MAKE SURE YOU PRESS THE SELECT BUTTON, AND NOT THE INDICATE BUTTON!!!!**. A common error with new users is to press the INDICATE button instead of the SELECT button on the mouse. A line (or other element) will be drawn as expected but the indicated location is only approximate and there will be an error in the drawing. Remember that SELECT 'locks onto' an existing element.

4. Whenever you want a point at the origin of a view or detail page, select FKey POINT, and then press the enter key twice. A point will appear at the origin.

5. Whenever you want a line through the origin of a view or detail page, select FKey LINE and /HORZ/ or /VERT/ and /UNLIM/, and press the enter key once. A line will appear through the origin.

6. You can only change from one group to another from the front page.

7. To change from one user to another (in the same group) it is only necessary to type the comma (i.e. ',') and then the user (i.e. **,DEMO**)

8. To file your drawing onto a floppy diskette, follow these steps:

   a. Select FKey FILE and submenu /DRIVE/

   b. Type in the drive your floppy drive is located on and press the enter key. (e.g.

type **A** and press the enter key).

c. Select submenu /FILE/ and file as you normally would. If the group and user do not exist, then you will be asked to create them.

9. To read a drawing from a floppy diskette, change your FKey FILE and submenu /DRIVE/ to the floppy drive and then call up the drawing as you normally would.

10. Make a point an NC point. Usually on a drawing there are a few points that you are using as reference points and you do not want erased. To prevent these points from being erased when the FKey SHOW and submenu /ERS PTS/ option is exercised, make the points NC points. To do this select FKey TYPE and submenu /STYLE/ and /NC/. Select the points and they will be changed to NC points. You can now clean up your drawing by erasing unnecessary points and still protect your important reference points.

11. To create a circle tangent to 3 elements, follow these steps:

a. INDICATE a point approximately where the center of the circle would be.

b. Project this point onto the 3 elements. Select FKey POINT; now first select the point and then select the element. You should now have 3 more points created (i.e. one point projected onto each of the three elements).

c. Construct a circle through the 3 points. Select FKey CIRCLE and then select the three points.

d. Erase all points. Select FKey SHOW and /ERS PTS/.

e. Define the center point of the circle you just created. Select FKey POINT and /DEF PTS/. Select the circle.

f. Project the center point of the circle onto the 3 elements one more time. Repeat steps ’b’ and ’c’.

g. That’s it! This circle should be accurate enough for most requirements. If you want it more accurate, repeat the operation one more time.

FKEY GROUP:

12. You must EXIT group mode before you can continue. Usually in MICRO CADAM you can press any Function Key at any time and continue working. One exception to this is when you are in FKey GROUP, /TRANSLATE/, and /MOVE/, /TURN/ or /SCALE/ ... you MUST select the /EXIT/ option to finish the group action, before you can continue with the drawing.

13. You may define points on a group. This is very handy if you want points on every element in the group. Form a temporary group and then Select FKey POINT. Select submenu /DEF PTS/ and press the Y/N button on the mouse when the **YN GROUP** option appears.

14. Multiple group /TRAP/ operations can be independently added together. Group and trap some elements in one area of your drawing. When finished, group and trap some elements in another element of your drawing. Repeat as many times as necessary. All the groups are added together and you may then perform an operation on all of them at once.

15. Remember that you can form temporary groups by color (under FKey TYPE) and by SETS (under FKey GROUP) as well as by the TRAP option under FKey GROUP.

FKEY RELIMIT:

16. You can Break and Relimit extension lines on dimensions. When you have extension lines running through each other, you can clean up your drawing by using FKey RELIMIT and submenu /BREAK/ and /ENDS/. Select an extension line to break it, and then relimit the ends (by using INDICATE) to suit.

17. Should you have a single line, and want part of it to be dashed (for example if part of a component is visible and part is hidden) you may use FKey RELIMIT and /BREAK/ and /BREAK AROUND/ to accomplish this. Follow these steps:

    a. Select FKey RELIMIT and submenu options /BREAK/ and /BREAK AROUND/.

    b. The menu prompt says *Sel line to modify*. Select the line you want to break into two parts (let's call this line #1)

c. The menu prompt now says *Sel break element*. Select the line you want line #1 to break around. Let's call this line #2.

d. Line #1 now breaks around line #2. Line #1 has now changed from being one single line into two separate lines.

e. Change to FKey TYPE and submenu /STYLE/ and /DASH/ and select one part of line #1 to make it dashed.

f. NOTE: Steps a - e will also work if you have a temporary group defined before starting the operation.(a)

FKEY WINDOW:

18. If you create some geometry and it is located off the existing window, you will receive the message "**OFF WINDOW YN ERASE / WINDOW TO SAVE**". Press the Y/N button on the mouse to erase the off window element, or toggle to window (press the Select and Indicate buttons simultaneously), select submenu /SIZE/ and adjust the size to view the off window element.

19. Whatever submenu option that is underlined when a window is set will become the default option when FKey WINDOW is next selected. For example, lets say that submenu /MOVE/ is the default option when FKey WINDOW is selected. To change it to /BOX/, select /BOX/ and then select /SET/ (and optionally submenu /1/, or some other number). Submenu /BOX/ will now be the default whenever you access FKey WINDOW.

20. When using FKey WINDOW and submenu /OVRLY/ you can key in multiple drawings and they will all visually overlay on top of your existing drawing. This is very useful to check the alignment of multiple drawings before using the overplot feature in the plot module, or to compare two versions of a drawing to see where the differences are.

FKEY SHOW:

21. If you are erasing elements by selecting them one at a time, to speed up the erase operation position the cursor at the junction of two elements and press the select button twice. (this way you only have to position the cursor once to erase two elements).

22. Use the F3 redraw key after erasing an element to reshow non-displayed elements. It is not uncommon to find multiple copies of lines on top of each other. You may suspect

that this is the case when you try to relimit a line and the relimit does not seem to work. To check and see if you have multiple copies of geometry on top of each other, follow these steps:

a. Select FKey SHOW and submenu /ERASE/

b. Select the geometry once. The geometry will erase.

c. Press the F3 key to redraw the screen.

d. If line reappears, select it again.

e. Press the F3 key again to redraw the screen.

f. Repeat steps ’d’ and ’e’ until a line does not reappear.

g. Press the YN button on the mouse to restore the erased element (i.e. the last copy of the element).

FKEY DETAIL:

23. Whenever you are in a detail page, the word DETAIL will appear at the top of the screen.

24. Whenever you are on the front page, the word VIEW will appear at the top of the screen.

25. Anytime you have a ditto on the front page of your drawing, select FKey DETAIL and then select the ditto. You will be placed on the detail page that the ditto is displayed from.

26. When you are on a detail page and you want to return to the front page, select FKey DETAIL to bring up the detail menu and select the /RTN/ submenu option.

27. If you have several people working on different subassemblies, you can use the FKey DETAIL and submenu /TRANSFER/ option to transfer all of these subassemblies into the detail pages of a single drawing. Once these subassemblies are on the detail pages of one drawing, define pivot points and lever points on the detail pages as required, and then assemble the detail pages into a final assembly on the front page.

28. When you transfer a view or detail page to another drawing, all the necessary detail pages required to reconstruct the view or detail page, will be transferred as well.

29. Here is a summary of the different ways to transfer information between drawings:

    a. The ENTIRE VIEW from one drawing to the next available detail page of another drawing.

    b. The ENTIRE ACTIVE DETAIL page from one drawing, to the next available detail page of another drawing.

    c. To copy some geometry from the front page of one drawing to the next available page of another drawing, first use FKey DETAIL and submenu /COPY/ to copy the information from the front page to a detail page, then use item 'b' above.

30. If you define points on a ditto, the pivot point will appear, as well as all other points that presently exist on the detail page. If you want points passed through to the detail on the front page, first go to the detail page and define points on the geometry there. Then return to the front page and define points on the detail. The points will be passed through. This is very useful for connecting geometry onto dittos.

31. Should you have a drawing with many detail pages that you need to copy to other drawings, instead of using FKey DETAIL and submenu /TRANSFER/, place a copy of this drawing temporarily in the CAD,STDLIB (or whatever group name you are using) and then use the FKey DETAIL and submenu /STDLIB/ option. See FKey DETAIL in Chapter 26 for more information.

FKEY AUXVIEW:

32. You can use FKey AUXVIEW and TRUE VIEW at Z=0 (i.e. elevation=0) to create an auxiliary view in order to project elements into an enlarged detailed view. In this case the true view happens to be the same orientation as an orthographic view. FKey AUXVIEW and /3-VU/ (with a Z coordinate of zero) may now be used to project information into the enlarged detail view.

FKEY NOTE:

33. Under Fkey NOTE and submenu /NOTE/ you can move a note and key an edit at the

same time.

34. To reposition a note, change to FKey NOTE and submenu /POSN/. Set the desired position, and then select an existing note.

FKEY ORIGIN:

35. If you are drawing in MM (i.e. millimeters) and inches on the same drawing, you can use FKey ORIGIN to start another origin with a different scale. This will allow you to both MM and inches on the same drawing. See ORIGIN in Chapter 27 for more information.

FKEY DIM:

36. When placing dimensions on a drawing, select an existing dimension and the new dimension will line up with it.

37. Text or dimensions that are too small to read will display as boxes. Change the text to a large size or window in closer to read the text.

38. To dimension using fractions, at the *decimal places* prompt key in a negative sign (i.e. "-" and then the denominator of the fraction. For example, to dimension to the nearest 16th of an inch, key in **-16**; to the nearest 32nd of an inch, key in **-32**, etc.

APPENDIX A

SAMPLE DRAWINGS

Figures 1 - 8 contain actual production drawings reproduced here with the permission of JOHN T. HEPBURN, LIMITED . They are intended to give the reader a perspective on drawings used in a production environment.

JOHN T. HEPBURN, LIMITED has been building quality engineered products for industries around the world since 1905. Major product lines include Cranes, Mine Hoists, Mill Machinery, Hydraulic Presses, Marine Equipment and a full Project Manufacturing service for other types of machinery and equipment.

JOHN T. HEPBURN, LIMITED is located at:

7450 Torbram Rd.
Mississauga, Ontario, CANADA
L4T 1G9

Phone: 1-905-671-2200

The author would like to thank JOHN T. HEPBURN, LIMITED for allowing their production drawings to be used in this book.

Figures 9 - 15 contain a variety of sample drawings to provide the reader with examples of some of the other uses for MICRO CADAM software.

Please note that there are also sample drawings located in the CAD,DEMO group,user. Please run the MICRO CADAM program and call these drawings up onto the screen to view them.

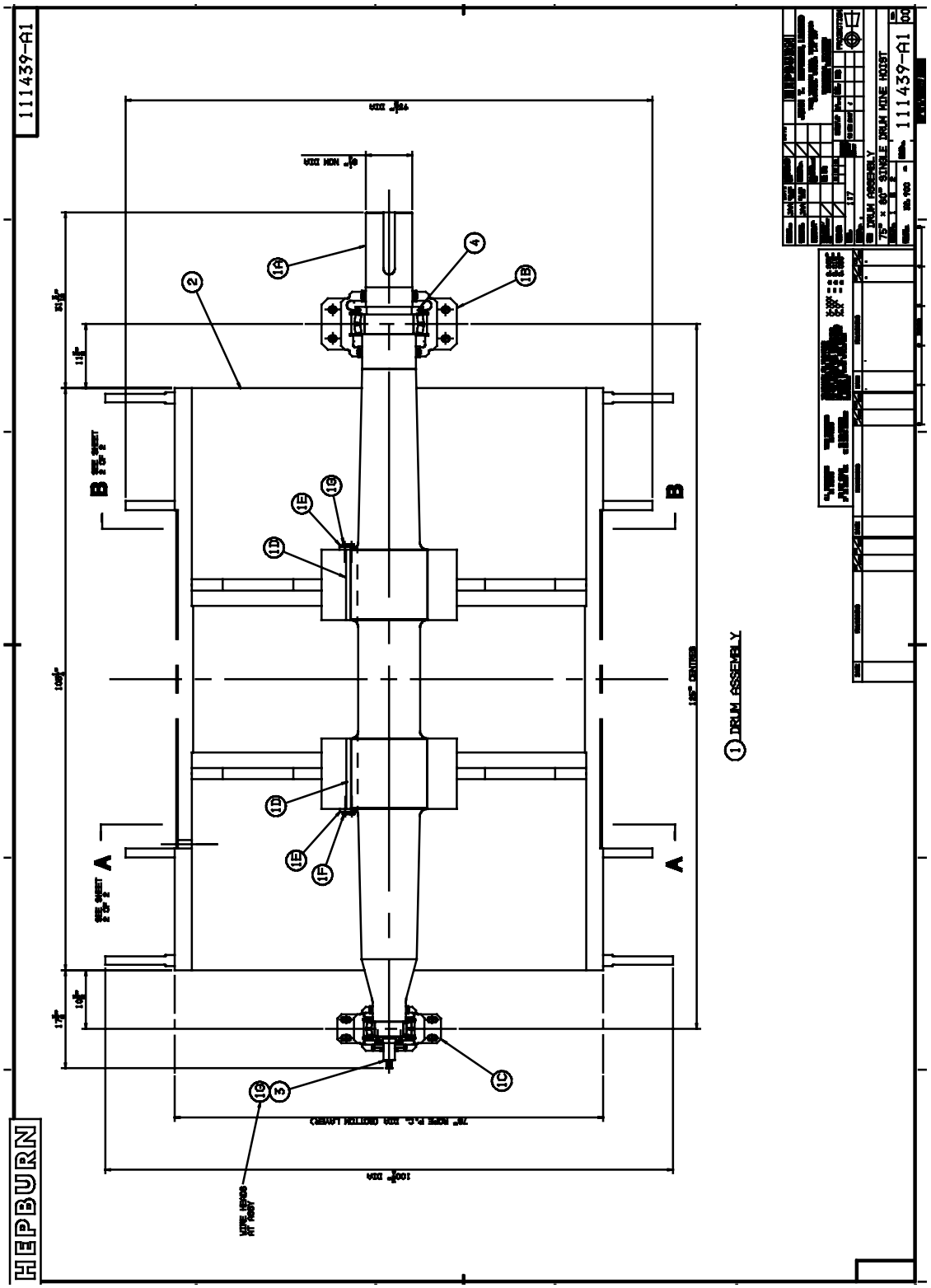

Figure 1 DRUM ASSEMBLY 75" X 60" SINGLE DRUM MINE HOIST
(DRAWING COURTESY OF JOHN T. HEPBURN, LIMITED)

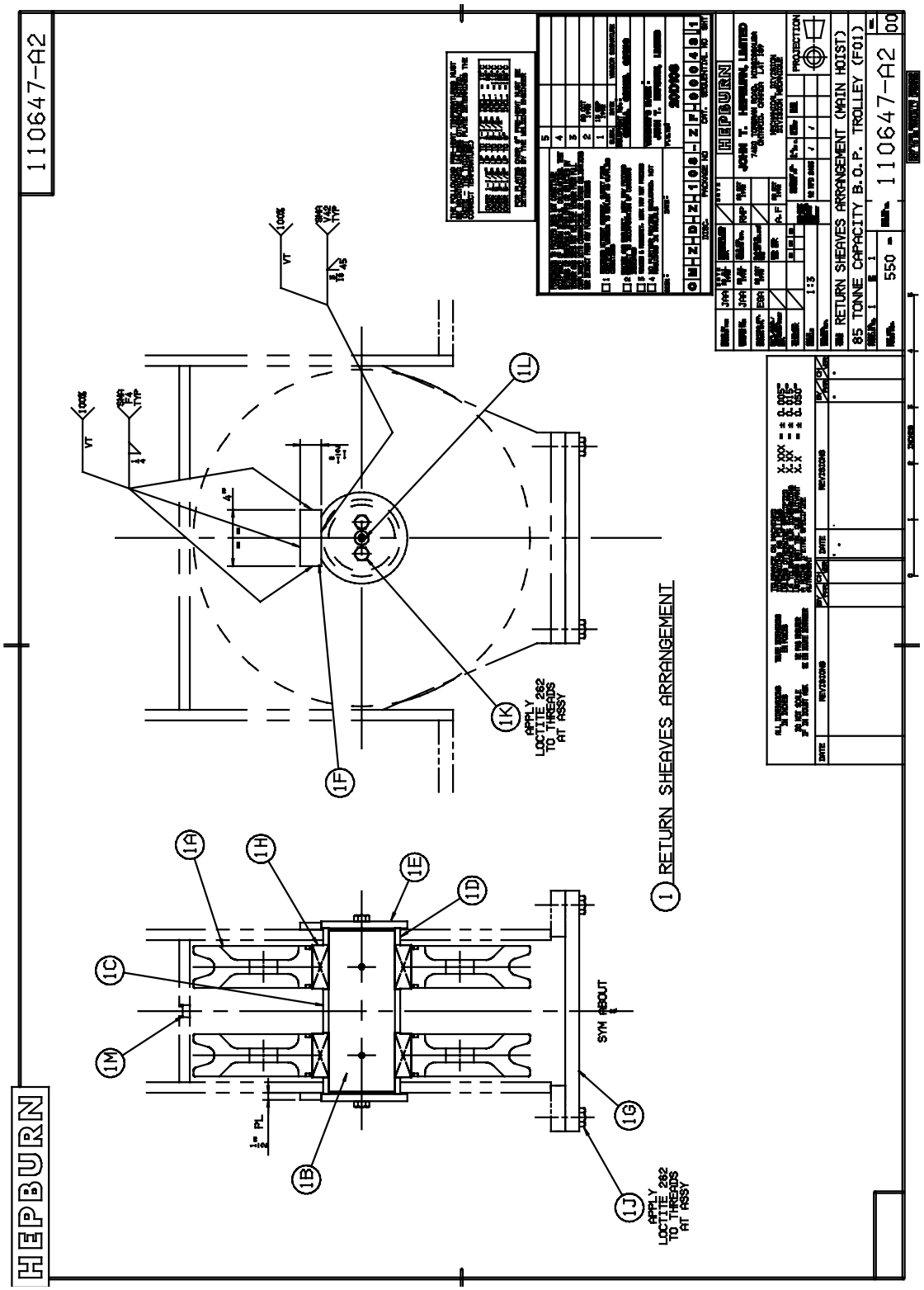

Figure 2 RETURN SHEAVES ARRANGEMENT (MAIN HOIST) 85 TON CAPACITY B.O.P. TROLLEY (DRAWING COURTESY OF JOHN T. HEPBURN, LIMITED)

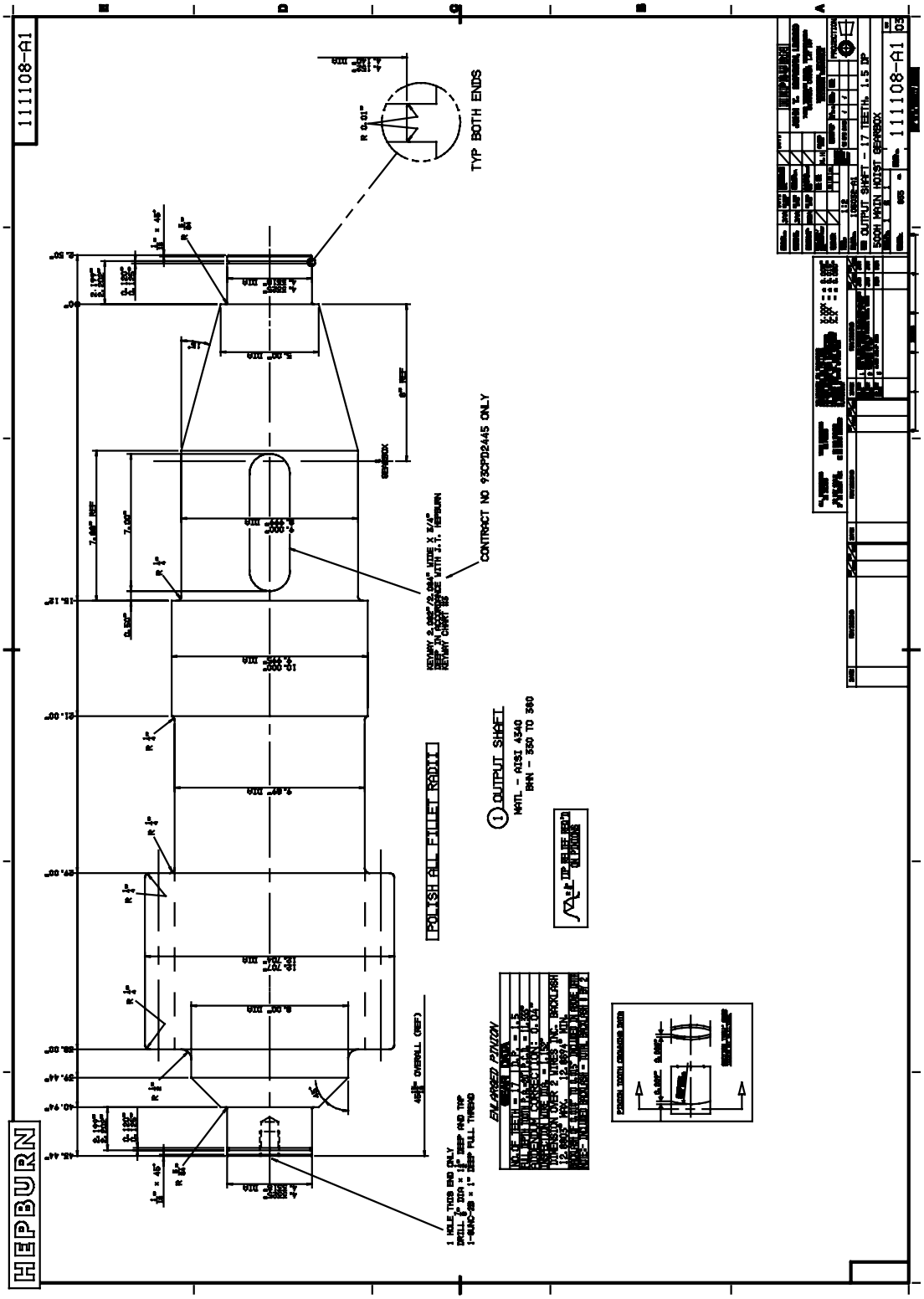

Figure 3 OUTPUT SHAFT - 17 TEETH, 1.5 DP, 500H MAIN HOIST GEAR BOX
(DRAWING COURTESY OF JOHN T. HEPBURN, LIMITED)

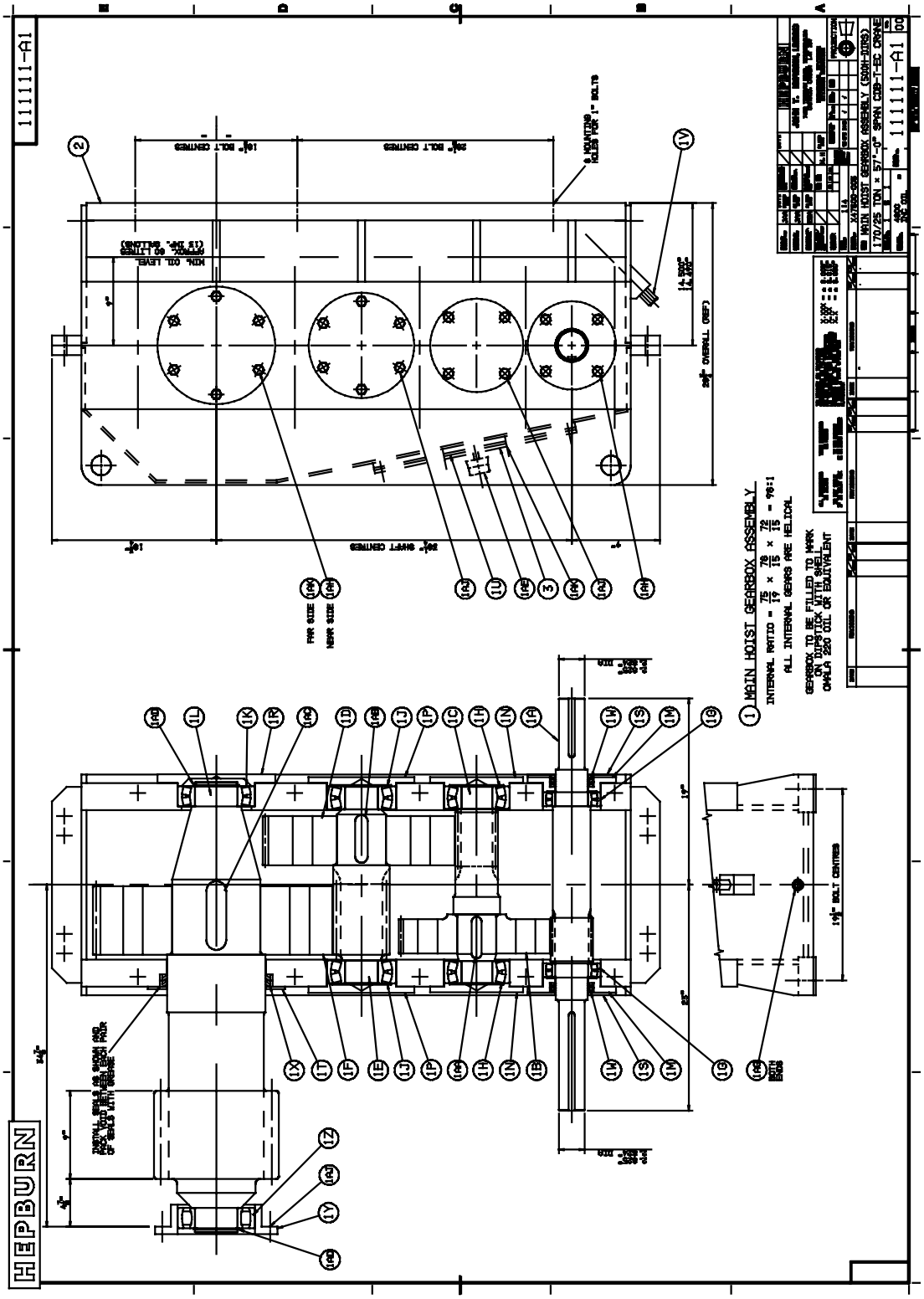

Figure 4 MAIN HOIST GEARBOX ASSEMBLY (500H - DIRS)
(DRAWING COURTESY OF JOHN T. HEPBURN, LIMITED)

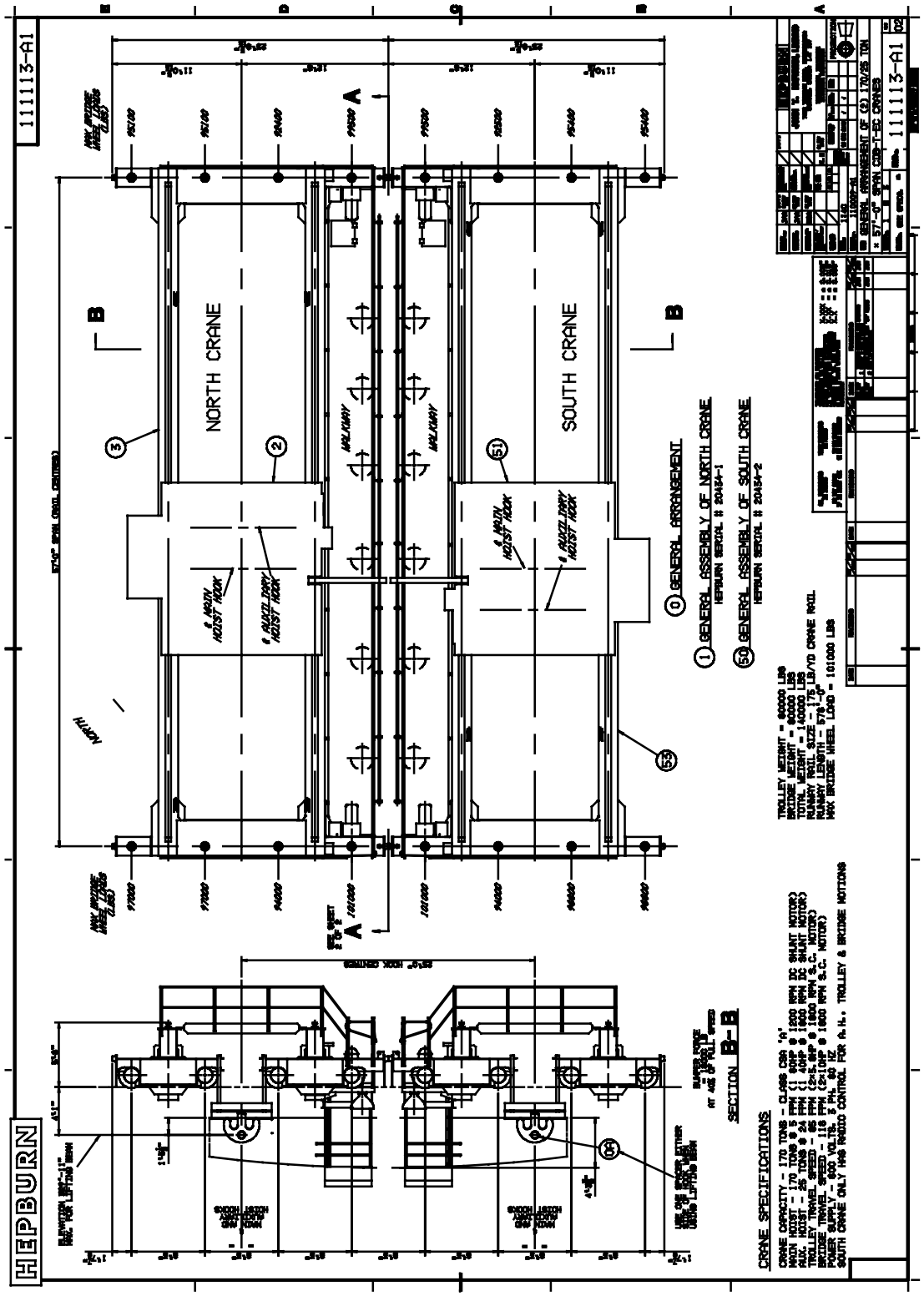

Figure 5 GENERAL ARRANGEMENT OF (2) 170/25 TON X 57'-0" SPAN CDB-T-EC CRANES (DRAWING COURTESY OF JOHN T. HEPBURN, LIMITED)

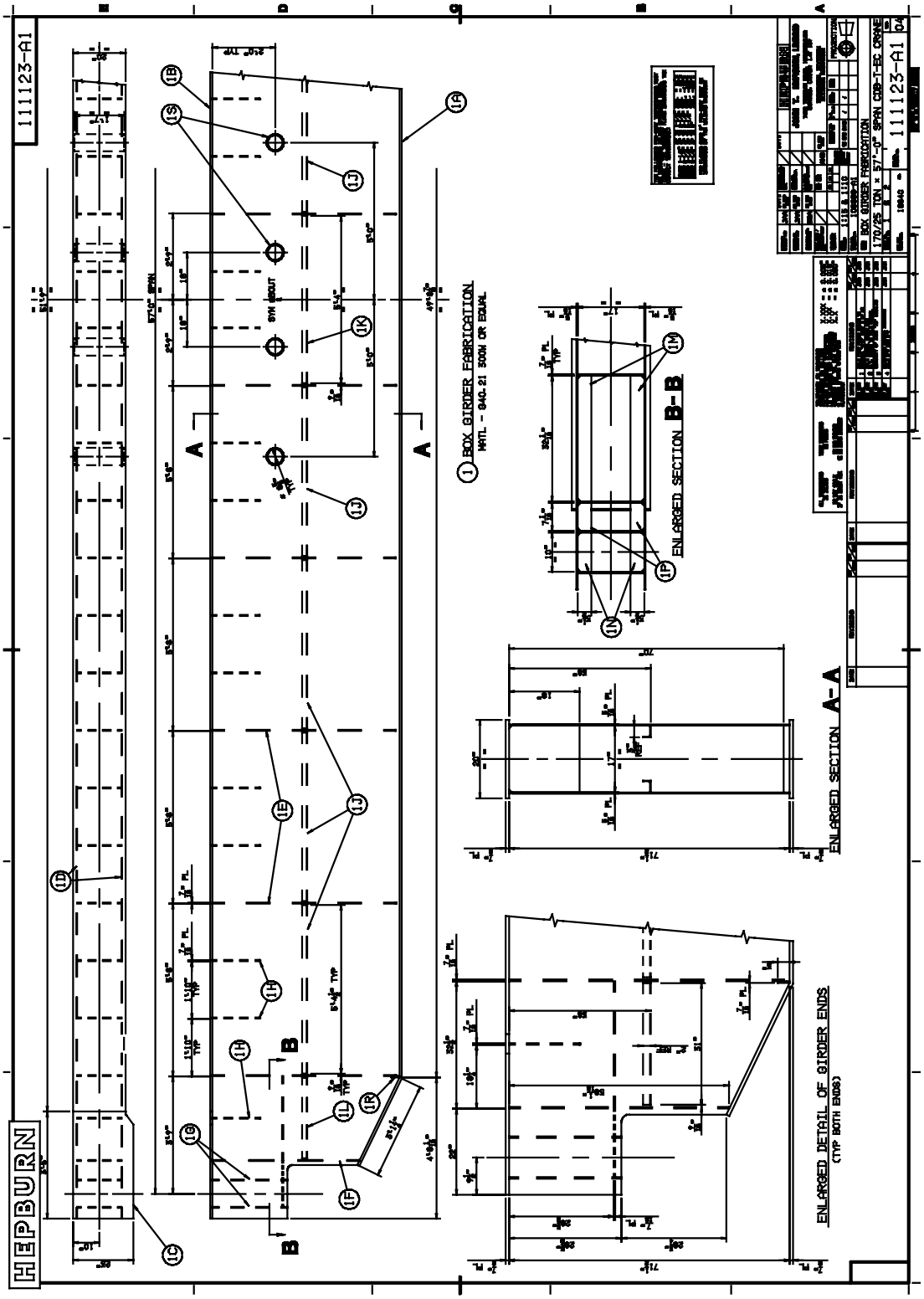

Figure 6 BOX GIRDER FABRICATION 170/25 TON X 57'-0" SPAN CDB-T-EC CRANE (DRAWING COURTESY OF JOHN T. HEPBURN, LIMITED)

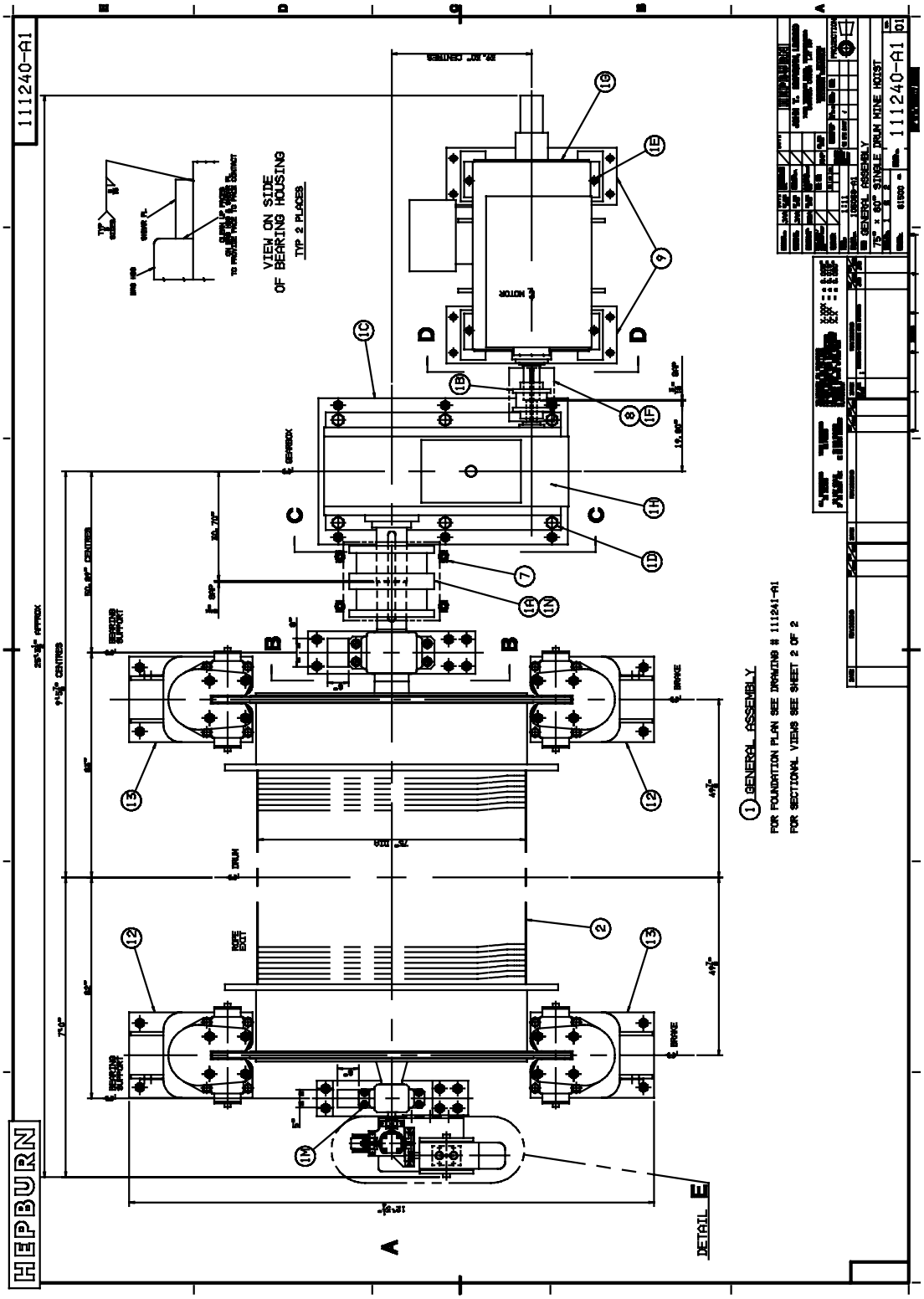

Figure 7 GENERAL ASSEMBLY OF 75" X 60" SINGLE DRUM MINE HOIST (SHT 1 OF 2) (DRAWING COURTESY OF JOHN T. HEPBURN, LIMITED)

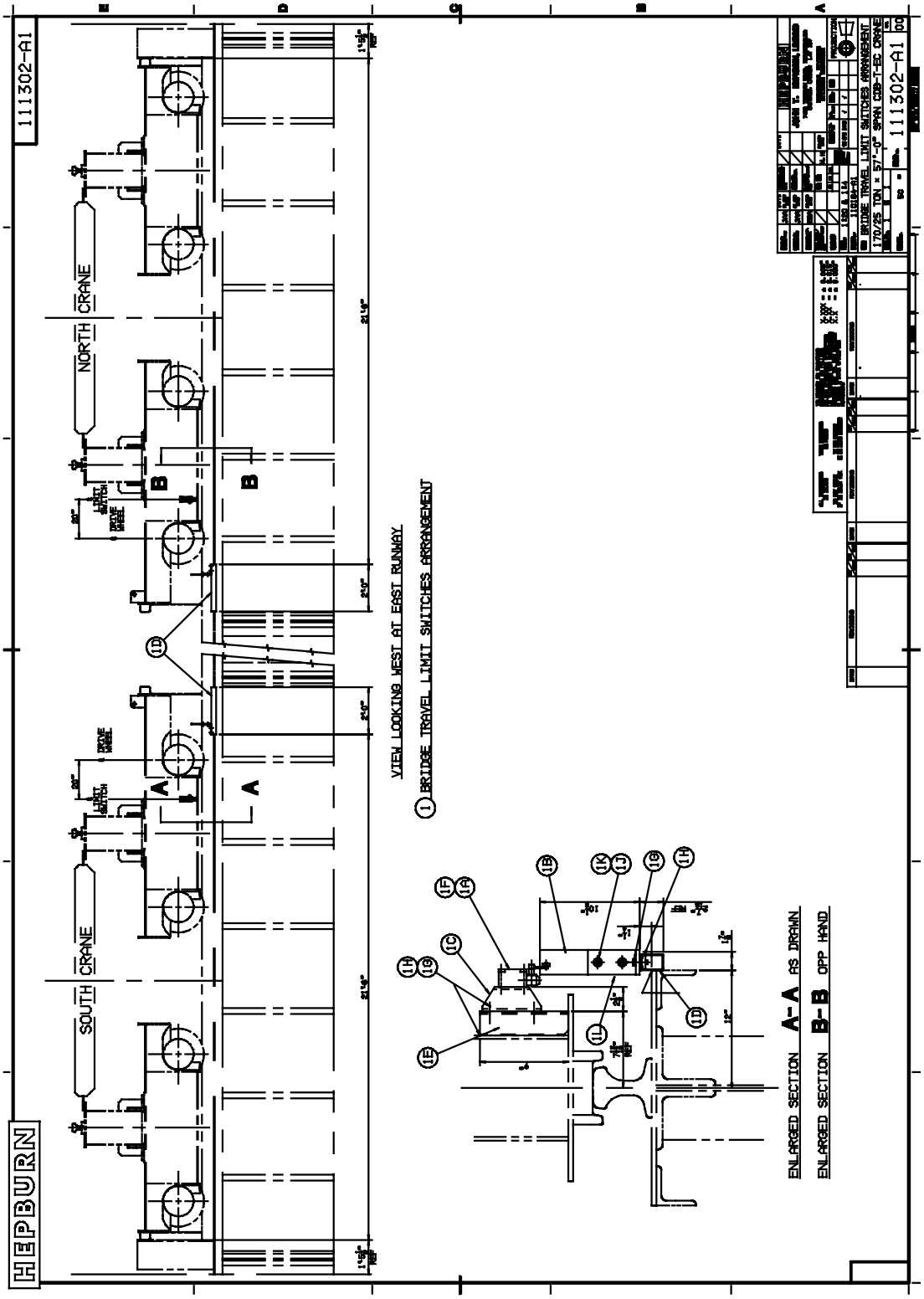

Figure 8 BRIDGE TRAVEL LIMIT SWITCH ARRANGEMENT OF 170/25 TON X 57’-0" SPAN CDB-T-EC CRANE (DRAWING COURTESY OF JOHN T. HEPBURN, LIMITED)

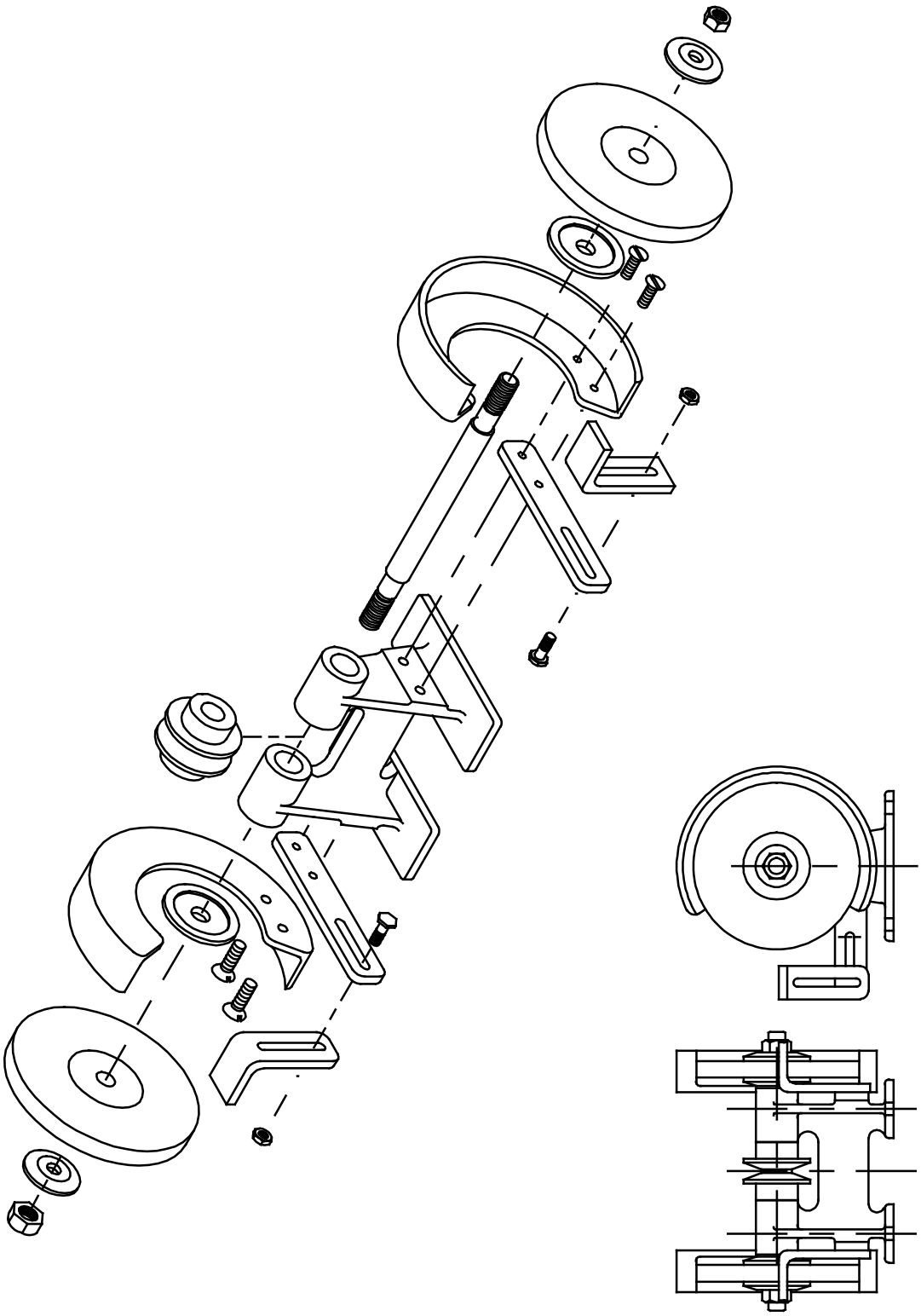

Figure 9 ISOMETRIC OF A BENCH GRINDER

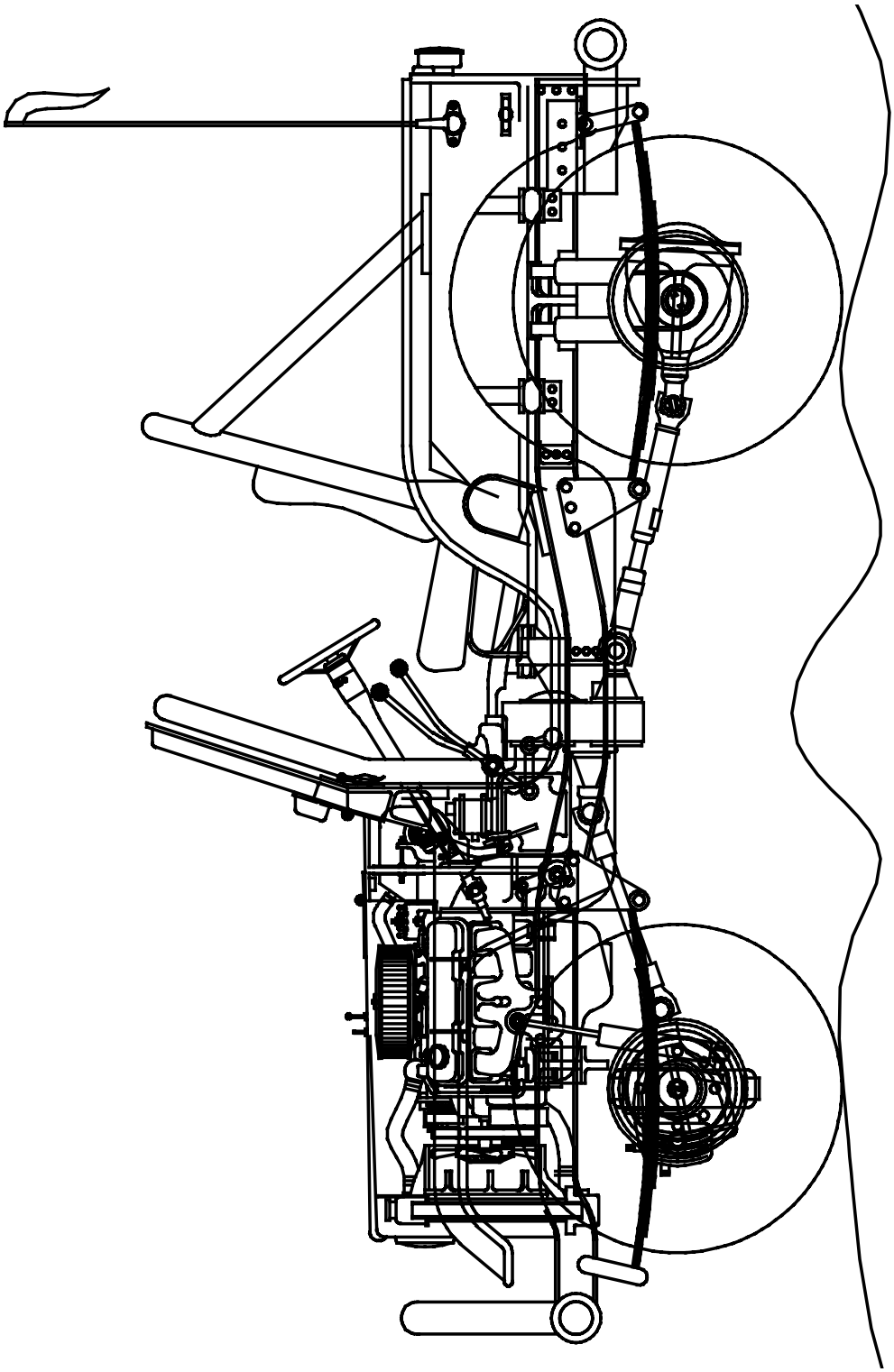

Figure 10 A 4 WHEEL DRIVE VEHICLE

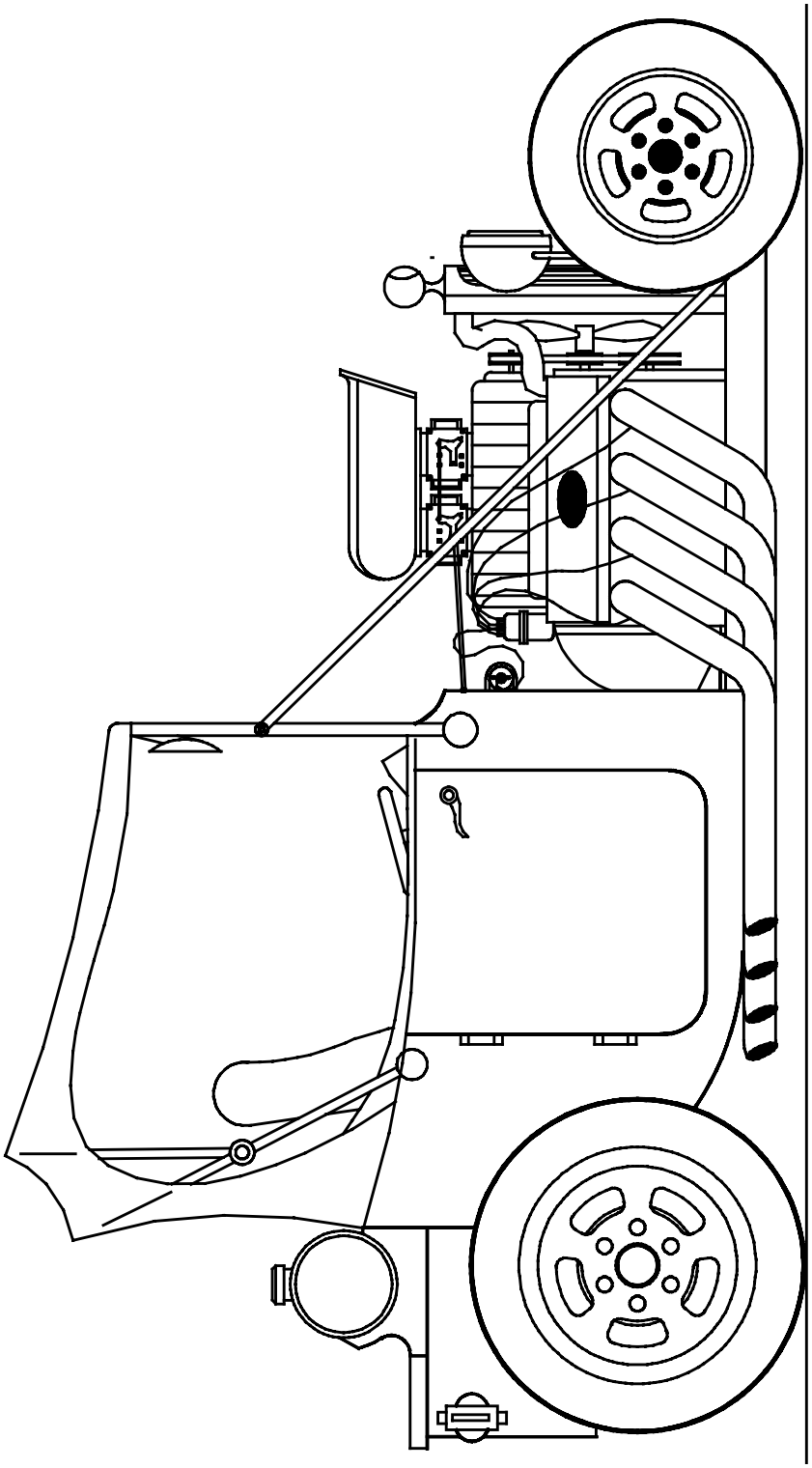

Figure 11 HOTROD

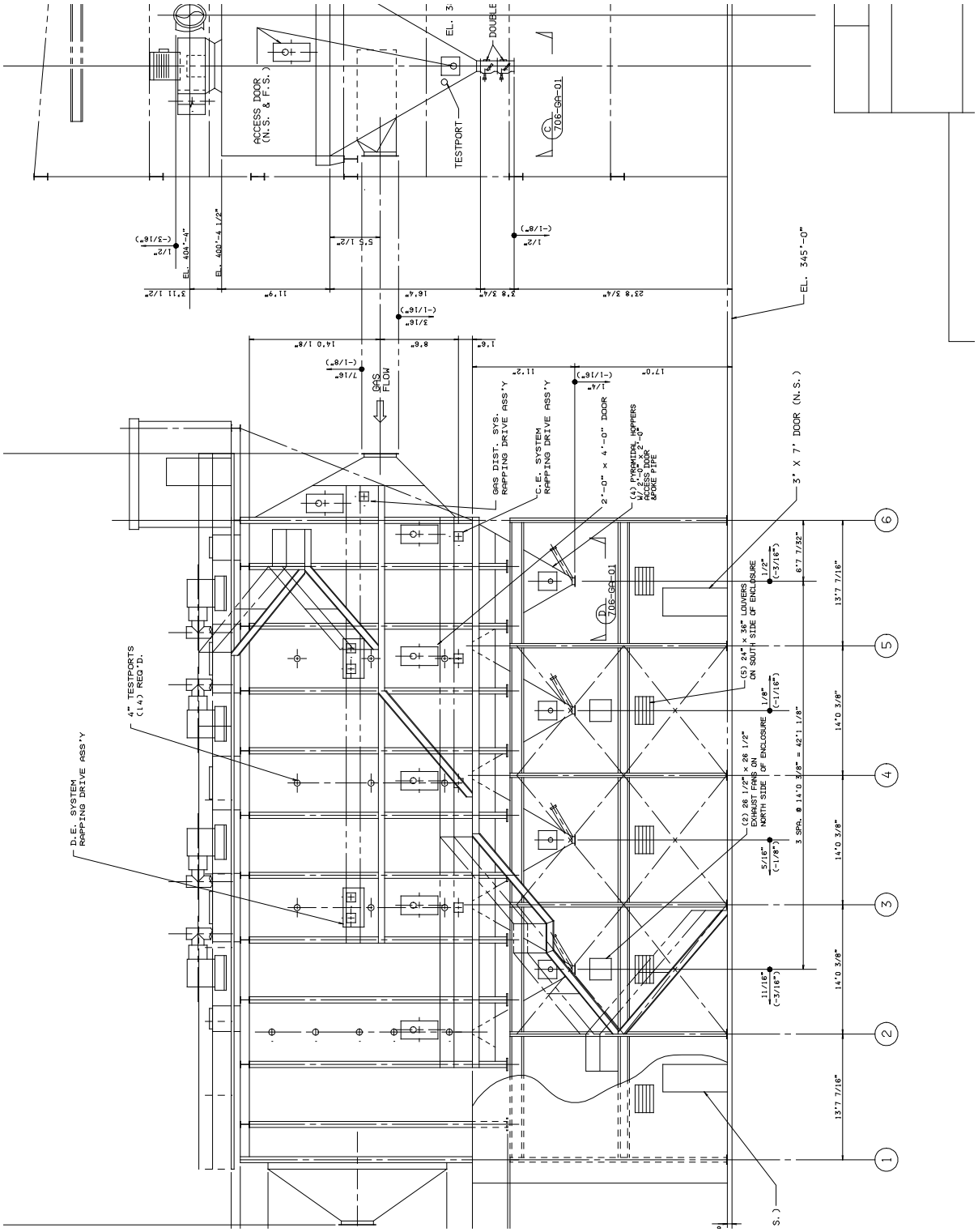

Figure 12 POWERPLANT

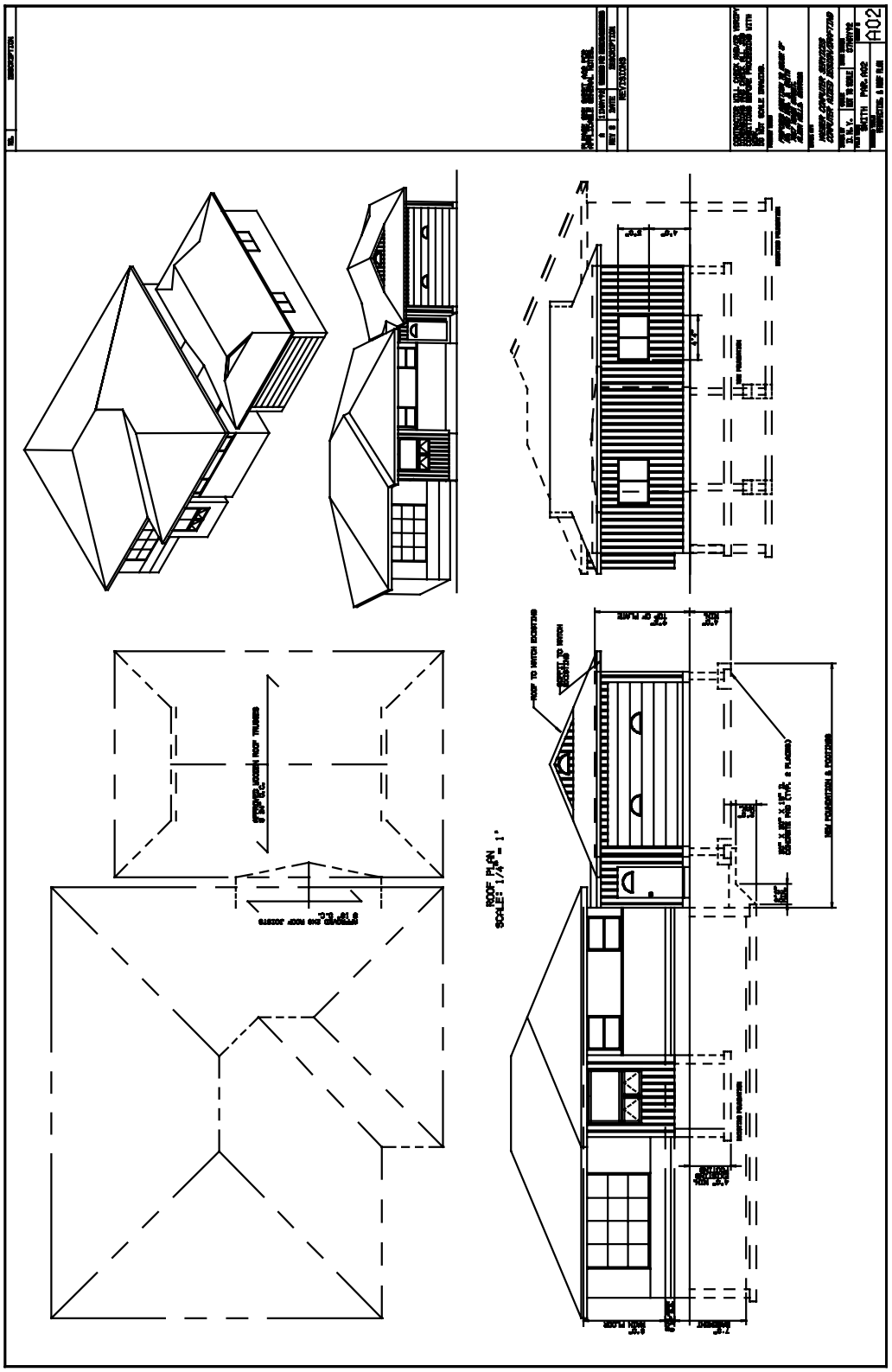

Figure 13 GARAGE ADDITION

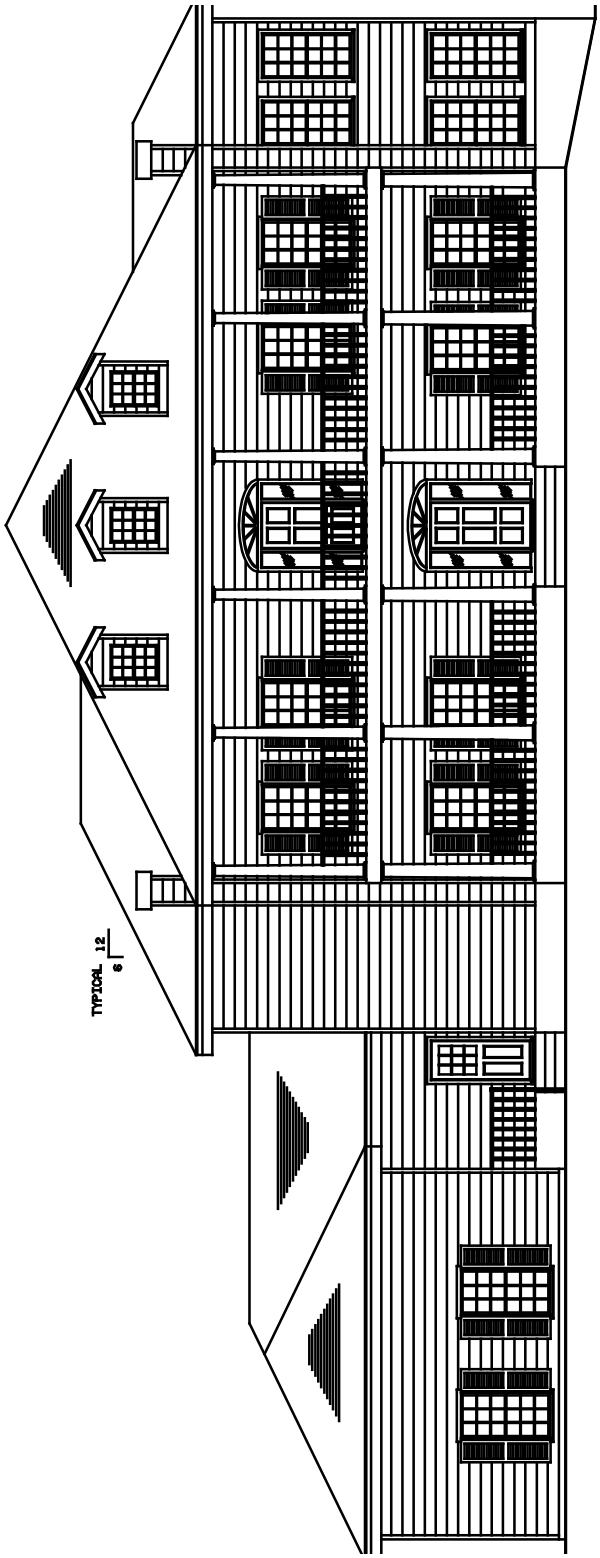

Figure 14 FRONT ELEVATION

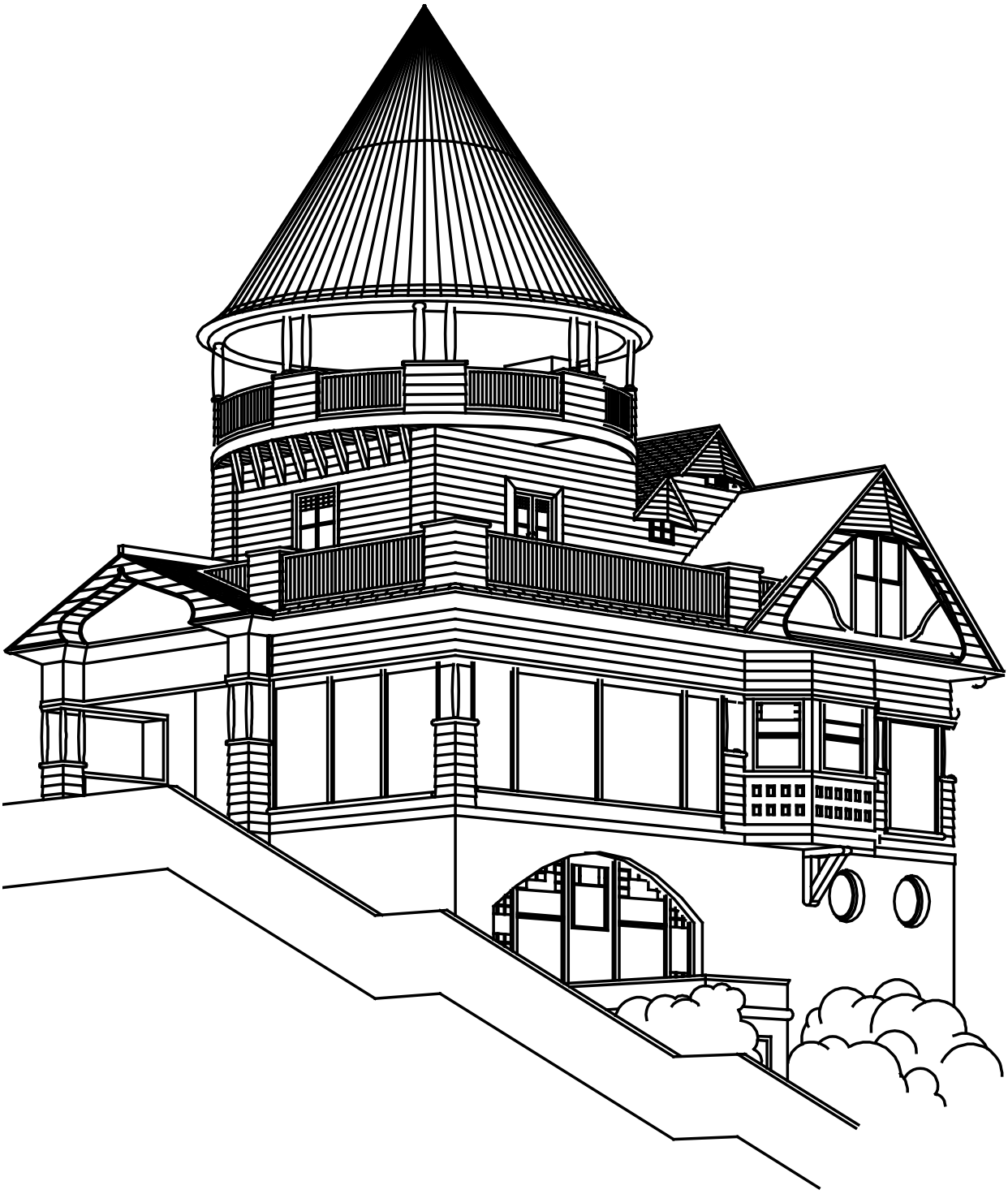

Figure 15 HOLLYHILL

APPENDIX B ABBREVIATIONS

ANG	angle
ANSI	American National Standards Institute
APPL	application
ARW	arrow
ATTRIB	attribute
AUX VIEW	auxiliary view
B	blue
BACK	backward
BLN	balloon
BLNK	blank
BK	breakline
BRK	break
BT	bottom
CHAMF	chamfer
CHANGE PV	change primary view
CHAR HT	character height
CHAR WID	character width
CHNG	change

CIR	circle
CL	centerline
CM	centimeters
CON	constant
CONV	convert
CRN	corner
CTR	center
CUR	current
CURV	curve
DEC PL	decimal place
DEF	define
DEF PTS	define points
DELTA X	distance from current x
DELTA Y	distance from current y
DET	detect or detail
DETL	detail
DIA	diameter
DIMEN	dimension
DIR	direction
DIST	distance

DRAWING	a MICRO CADAM drawing. The words DRAWING and MODEL are used interchangeably in this book.
DSPLY	display
DUPL	duplicate
DX	distance from current x value
DY	distance from current y value
ELEM	element
ELL	ellipse
ERS	erase
ERS-RES	erase-restore
EXT	extension
EXT LN	extension line
FWD	forward
G	green
GEN NOTE	general note
HATCH	cross hatch
HORIZ	horizontal
HORIZ CTR	horizontal center
HORIZ SP	horizontal spacing
HT	height
HVY	heavy (line weight)

ID	identification
IMPOS GEOM	impossible geometry
IND	indicate
INVAL	invalid
ISO	isometric
ISO	International Standards Organizations
JUST	justification
LDR LN	leader line
LENG	length
LH	left
LIN SPL	linear spline
LOAD PT	load point
LN	line
MAJ	major
MAX	maximum
MED	medium
MF	mainframe
MIN	minimum
MISC	miscellaneous
MM	millimeters

MODEL	a MICRO CADAM drawing. The words DRAWING and MODEL are used interchangeably in this book.
MULTI	multiple
NC	numerical control line
NO-SPEC	no specification
NORM	normal
NO COPY	elements will not be copied
NRML	normal
NUM	number
OBL	oblique
ORTHO	orthographic
OVRLY	overlay
PARAL	parallel
PARMS	parameters
PHAN	phantom
PN,FN	part name, find number
PT	point
POSN	position
PROP	properties
PT-ELEM	point-element
PT-PT	point-to-point line

PTS	points
PV	primary view
PW	password
QUAD	quadrant
R	red
RAD	radius
RECT	rectangle
REL	relative
RES	restore
RH	right
RO	read-only
RT	right
RTN	return
RW	read-write
SCL	scale
SEL	select
SPECS	specifications
SPL	spline
SQR	square
STD	standard
SUB	subtract

3-D	three dimensional
THK	thickness
TP	top
TRANSL	translate
TRI	triangle
TRN	turn
2-D	two dimensional
TXT	text
TXT HT	text height
UNAUTH	unauthorized
UNLIM	unlimited
VAR	variable
VERT	vertical
VERT SP	vertical spacing
VT CTR	vertical center
WD	width
WDO	window
WIT	witness
X-BT	extreme bottom
XH	crosshatch
X LT	extreme left

X RT	extreme right
X TP	extreme top
Y-DIR	vertical direction
YN	yes/no
3-D	three dimensional

APPENDIX C GLOSSARY

ABORT: Default menu option for GROUP function. Cancels any GROUP operation in progress and disbands any existing temporary group of elements.

ACKNOWLEDGMENT: Message displayed at the top of the screen confirming the result of the last action.

ANGLE OF INTERCEPT: Angle at which an element meets an intersecting element.

ANNOTATION: Descriptive or explanatory information added to a drawing. Annotation tools include the NOTE, DIMENSION, and SYMBOL functions.

ANSI DIMENSIONS: Dimensions established by Lockheed Corporation in accordance with American National Standards Institute recommendations.

AUX VIEW/AUXILIARY VIEW: Function used to create alternate views of a drawing. Auxiliary views are mathematically related to the primary view. These alternate views may be orthographic, true, or isometric.

AXIS: Line of numbered points used in conjunction with a perpendicular numbered line. Provides coordinates with which to identify specific areas of a drawing. The axis lines are not displayed.

BALLOON: Menu option in the SYMBOL function. Used to construct text surrounded by a balloon (circle).

BREAK: Menu option in the RELIMIT function. Used to break an element into segments.

BREAK AROUND: Modifier menu option of /BREAK/ in the RELIMIT function. Used to break a line around another element.

BREAK INSIDE: Modifier menu option of /BREAK/ in the RELIMIT function. Used to break a line so that the remaining line segment is inside another element.

BREAKLINE: Jagged line denoting a partially shown element. Other line types may be converted to breaklines in the TYPE function using menu option /STYLE/.

BREAKOUT LINE: Line used in structural drawings to show the interior of an object or the cut end of a pipe.

CADAM: An acronym for Computer Augmented Design and Manufacturing.

CALL: Menu option in the FILES function. Used to access a list of drawings in a file. Drawings may then be called to the screen from this list.

CANTED: Having an oblique or slanted surface.

CAUTION: Message informing user that an action may be unwise or may cause difficulty.

CENTERLINE: Light line created in LINE function. Often used to indicate the center of an element. Other line types may be converted to centerlines in the TYPE function using menu option /STYLE/.

CENTERPOINT: The midpoint of a centerline, or the center of a circle, ellipse, or arc.

CHAIN MODE: Modifier menu option within the following functions:

- RELIMIT function, menu option /ENDS/. Used to modify several lines to a common point or element.
- LINE function, menu option /PT-PT/. Used to create a line connecting several points.
- SPLINE function, menu option /LINEAR/. Used to create a linear spline connecting several points.

CHAMFER: Menu option in the CORNER function. Used to create bevelled corners and edges.

CHANGE: Menu option in several functions. Used to modify text or geometry.

CIRCLE: Function used to create circles, ellipses, and arcs.

CIRCLES NOT CONCENTRIC: Message warning that the circles you are selecting are not concentric. Reselect circles.

CLOSE: Menu option in the RELIMIT function used to restore previously relimited elements.

CONCAVE CORNER: Modifier menu option for /CORNER/ in CORNER function used to create the reverse of a rounded corner.

CONCENTRIC: Circles or spheres of different radii sharing the same centerpoint.

CONFIGURATION: Functional arrangement of computer equipment.

CONIC: Menu option within the SPLINE function. Used to construct conic sections.

CONIC SECTION: Plane curves created by the intersection of a right circular cone and a plane.

COORDINATE SYSTEM: Pairing between points of a line and real numbers.

COORDINATES: Position determined by the values of the X and Y axes.

CORNER: Function used to create several types of corners and chamfers.

CORNER, ANGULAR: Corner created by the intersection of two lines. Use CORNER function, menu option /CORNER/ to create angular corners.

CORNER, ROUNDED: Corner created by a curved element connecting two lines near their point of intersection. Use CORNER function, menu option /CORNER/, and its related modifier menu to create rounded corners.

CROSSHATCHING: Menu option in the DETAIL function. Used to create section lines that indicate the exposed surface of an object in a sectional view.

CROSS SECTION: View showing a part sliced at a right angle to an axis of the part.

CURVED ELEMENT: Circle, ellipse, arc, or spline.

DATA TRANSFERAL: Process of moving information (data) from one computer to another.

DATUM: Any element or indicated location used for the purposes of computation or reference. The location of a model may be established from or related to a datum.

DEFAULT: Preset value or message used by system when user first activates a function or menu option.

DELTA ANGLE: Angle measured relative to a selected line. Positive delta angles are measured counterclockwise and negative delta angles are measured clockwise from a selected line.

DETAIL: Function used to create detail pages in a drawing model. Details may be copied onto a primary view of your drawing model and onto other detail pages with the /DITTO/ and /USE/ menu options.

DIAMETER: Length of a straight line through the center of a circle or an arc.

DIAMETER CHARACTERS: Geometric symbol denoting the diameter of a circle or ellipse.

DIMENSION: Function used to place dimensions on a drawing.

DIMENSION CENTER: Point around which dimension text is centered.

DIMENSION LINE: Line defining dimensioned feature or element.

DISPLAY: Menu option in the NOTE function. Used to display notes as boxes or to temporarily conceal the display of notes.

DITTO: Menu option in the DETAIL function. Used to copy detail onto the primary view in a manner that conserves space in the computer memory. A ditto is treated as a single element.

DX: Relative distance from a defined element or feature along the X axis.

DY: Relative distance from a defined element or feature along the Y axis.

ELEMENT: A geometric entity that cannot be broken down into other elements. Points, lines, circles, and splines are elements.

ELLIPSE: Closed plane curve generated by a point moving in such a way that the sum of its distances from two fixed points is a constant.

END: Modifier menu option in the SPLINE function. Used to specify the last defining point of a spline.

ENDPOINT: Point designating the end of an element. For a circle, the endpoint (and starting point) is at the 3 o'clock position.

ENDS: Menu option in the RELIMIT function. Used to change the length of existing elements.

EXTENSION LINE: Line specifying element that has been dimensioned.

FEATURES: Objects that are not elements. Notes, arrows, symbols, balloons, and dimensions are features.

FILES: Function used for data management. New drawings are created and existing drawings may be called up in this function.

FLANGE: Rib or rim for strength, guiding, or attachment to another object.

FLIP: Modifier menu option of /MIRROR/ in the GROUP function. Used to place a reverse image of a specified group of elements on the opposite side of a specified line.

FUNCTION: Programmed instructions within the system used to achieve specified activities, LINE, CIRCLE, etc.

FUNCTION KEY: Key used to select the active function.

GRID: Menu option in the POINT function. Fills screen with rows and columns of points in a grid pattern. Used to provide reference points for the construction of other geometry.

GROUP: Function used to create a temporary group of elements upon which an operation may be performed. Also used to rotate, move, and scale a temporary group of elements.

HARDCOPY: Printed copy of a drawing produced on a printer or plotter.

HARDWARE: Physical equipment (computers, monitors, plotters, etc.) used in data processing.

HIDDEN LINES: Short dashed lines used to show the hidden features of a part.

ISOMETRIC DRAWING/VIEW: View in which three faces of an object are shown projected onto a picture plane.

JUSTIFICATION PARAMETERS: Used in the NOTE and DIMENSIONS function to align text. With NOTE, text is placed with the parameters of an imaginary box. With DIMENSION, text is placed along a dimension line.

LEADER LINE: Line segment connecting a dimension value to a dimensioned element.

LEVER POINT: Menu option in the DETAIL function. Used to position a detail on a drawing at a specified angle. It can be used in combination with the PIVOT POINT to position a detail.

LINE: Function used to draw horizontal, vertical, angles, and point-to-point lines.

LINEAR SPLINE: Menu option in the SPLINE function. Used to create linear splines (straight lines connecting a series of points).

LOCKON: Option of /GRID/ menu in the POINT function. Used to "lock" a grid in place so that all INDICATES use nearest grid point. The /LOCKON/ option is active even when the grid is not shown and remains active until the grid is erased.

LOGON: The process of starting MICRO CADAM.

LOGOFF: The process of shutting down MICRO CADAM at the end of a work session.

MAJOR DIAMETER: Length of the line through the center of an ellipse that is equal to the true diameter of the full circle.

MENU: List of available options displayed for selection.

MESSAGE: System information for the user.

MIDPOINT: Point designating the center of a line.

MINOR DIAMETER: Length of the shortest straight line through the center of an ellipse, perpendicular to the major diameter.

MINUTES: In geometry, 1/60 degree.

MIRROR: Menu option in the GROUP function. Used to place a mirrored image of a group of elements on the opposite side of a specified line.

MIRROR LINE: Used in the GROUP Function, menu option /MIRROR/, and sub-options /FLIP/ and /REFLECT/. Line or lines across which a group of elements may be flipped or reflected.

MODEL: Representation of a device or part. A drawing model is comprised of the primary view and associated views and details.

MODEL FULL: Message signifying that a drawing model has no more space.

MODIFIER MENU: List of options available to modify primary and secondary menu options.

MOUSE: Hand held pointing device with function buttons.

NESTED SET: A set stored within another set in the GROUP function.

NO-SHOW: Menu option in the SHOW function. Used to temporarily conceal the display of selected elements.

NORMAL: Line or plane perpendicular to a curve at the point of tangency, or perpendicular to a straight line connecting two consecutive points on a curve.

NOTE: Function used to annotate drawings with text.

OFFSET: Function used to create duplicate elements and place them at a specified distance from the parent element.

ORIGIN: The term origin is used in two ways:

- Function used to create more than one coordinate system in a drawing.
- The intersection of the X and Y axes (coordinates 0,0).

ORTHOGRAPHIC PROJECTION: Projection of a single view of an object on a drawing surface that is perpendicular to both the view and the lines of projection.

OUT-OF-SCALE DIMENSION: A dimension substituted by the user for the dimension value mathematically generated by the system. Out-of-scale dimensions are normally designated as such on drawings and blueprints.

OVERLAY: Function used to display one drawing on top of another drawing.

OVERSHOOT DISTANCE: Distance extension lines extend past dimensioned elements.

OVER-UNDER DIMENSION: Dimension with two lines of text, stacked vertically.

PACK: Menu option in the SHOW function. Used to store data in a compact form and take up less system storage space.

PARALLEL: Lying in the same plane and having no point in common.

PARENT ELEMENT: Element from which a duplicate element is produced.

PIGTAIL: Sub-menu option of /CORNER/ menu in the CORNER function. A type of corner that resembles a pigtail. Special symbol used in template construction.

PIVOT POINT: Point on a detail from which the detail is attached to the current view or another detail. Pivot points are established in the DETAIL function, secondary menu option /PIVOT/.

PLANE: Flat or level surface.

PLOT: Drawing or diagram produced on a printer or plotter.

PLOT DATA: Information placed on a drawing model in the FILES function that specifies parameters for the drawing plot.

POINT: Function used to place points on a drawing.

POINTING DEVICE: Mouse, digitizer or related device used for specifying locations or elements on your drawing.

PRIMARY MENU OPTION: The first menu displayed for each function. This is called a submenu in this book.

PRIMARY VIEW (PV): First view of a drawing.

PROJECTION: Process of reproducing a spatial object on a plane, curved surface, or line.

QUADRANT: Any of the four quarters into which a portion of a drawing is divided by two real or imaginary lines that intersect each other at right angles.

RADIUS CHARACTER: Geometric symbol denoting the radius of a circle or ellipse.

RELIMIT: Function used to alter existing elements. To relimit an element is to change its length.

SECONDARY MENU OPTION: The second menu displayed for each function. This is called a submenu in this book.

SHOW: Function used to temporarily conceal the display of elements, restore the display of concealed elements, or erase elements.

SINGLE PRECISION: Less accurate value than double precision, containing fewer significant numbers.

SPLINE: Function used to create splines. A spline is a drafting tool used to connect points by forming smooth curved lines. The SPLINE function performs the same function as this tool.

SYMBOL: Function used to place standard and customized symbols in your drawings.

SYMBOL TABLE: List of available symbols.

TANGENT: Line that lies in the plane of a curved element and makes contact with the curve at exactly one point.

TERMINATION POINT: End of element.

TRANSL: Menu option in the GROUP function. Used to move, turn, scale, or copy temporary groups of elements.

TRAP: Menu option in the GROUP function. Used to create a temporary group of elements.

TRUE LENGTH: Mathematically accurate measurement of length, not an approximation.

TRUE VIEW: View showing the true relationship of angled/skewed geometry along the line of sight of the desired plane.

TYPE: Function used to modify element style, weight, and color.

UNLIMITED: Modifier menu option in the LINE function. Used to create what are, for all practical purposes, infinite length lines. Since computer restrictions require that a length be assigned to every element, "unlimited" length lines do have an assigned length of 20,000 units.

USE: Menu option in the DETAIL function. Used to move a detail to the primary view so that the elements of a detail can be modified individually.

WINDOW: Function used to change the portion of a drawing displayed on the monitor. Acts like a movie camera, allowing the user to zoom in and out of a drawing.

WITNESS LINE: Line defining the length of a dimension.

WORKSTATION: Small, powerful single-user computer system consisting of a central processing unit, keyboard, memory storage device, display screen, and pointing device.

X AXIS: Horizontal straight line of numbered points with positive direction to the right of origin.

YES/NO: Function used differently depending on the function with which it is used. Check the message line to find the proper use of YES/NO in different situations. YES/NO is often used to erase an element created by the most recent user action. YES/NO is also used to confirm completion of a selected option and to reuse an existing value displayed in the acknowledgement area of the screen.

Y-AXIS: Vertical straight line of numbered points with positive direction moving upward from point of origin.

Z AXIS: Used for three-dimensional representations.

A

Abbreviations, B-1

Acknowledgment message, 6-15

Activating Functions, 6-4, 6-5, 6-13, 6-19, 6-20, 6-21

Active View, 6-13

ANALYSIS Function, 10-1

ANALYSIS function, 10-1
- /PT-ELEM/, 10-3
- /SECTION/, 10-25
- analyze
  - angle, 10-7, 10-8
  - arc, 10-10
  - axis block, 10-17
  - circle, 10-9
  - dot
  - conic, 10-16
  - ellipse, 10-11
  - line, 10-7
  - point, 10-6
  - real distance, 10-23
  - section properties, 10-29, 10-32, 10-34, 10-36
  - spline, 10-12, 10-13, 10-15
- boundary element method, 10-29
- centerline method, 10-36
- description, 10-4
- menu option /SECTION/, 10-25
- primary menu options, 10-1

- Section analysis formats
  - predefined, 10-31
  - user-created, 10-38
  - user-created, annotation of, 10-39
  - user-created, in /NOTE/

Arc, 13-25, 13-29
Arrow, create, 24-9

AUXILIARY VIEW function, 6-13
- /2-VU/, 25-59
- /3-VU/, 25-60
- /CHGPV/, 26-66
- /CHOOSE/, 25-56
- /ERS/, 25-65
- /MOV/, 25-62
- /NO SHOW/, 25-58
- /SCL/, 25-64
- /SHO/, 25-58
- /START/, 25-10
  - ortho, 25-9
  - true, 25-35
  - iso, 25-49
- change
  - view, auxiliary, 25-7, 25-56
  - view, primary, 25-7
  - view, scale, 25-64
- create
  - axonometric view, 25-53
  - isometric view, 25-50, 25-51, 25-52, 25-54
  - multiple views, 25-13
  - orthographic view, 25-13, 25-19
  - true view, 25-36, 25-45
- description, 25-1, 25-2, 25-10, 6-12, 6-13
- erase view, 25-65
- move view, 25-62
- no-show, view, 25-58
- primary menu option, 25-7
- project, group of elements, 25-61
- rotate, view, 25-62
- scale, view, 25-64

Auxiliary Views, 25-1

Axis Block, 6-2

B

Balloon, create, 24-19

C

CALL up an existing drawing, 8-12

CIRCLE function
- /CIRCLE/, 13-1
- /ELLIPSE/, 13-39
- analyze, circle, 10-9
- create
  - arc, 13-25
  - ellipse, 13-42
- description, 13-1
- primary menu options, 13-2

COLOR, side menu, 19-10

CORNER function, 16-1
- /CHAMFER/, 16-11

/CORNER/, 16-3
create
chamfer, 16-2
corner
rounded
slot
description
primary menu option

Crosshatch, Ditto

CTRL-BREAK

Current function message

Cursor, pointing

D

Data Manager
Delta, create

DETAIL, function
/COPY/
/DITTO/
/SHOW/
/START/
/STDLIB/
/TRANSFER/
/USE/
copy
detail as a use
detail as a ditto
from Standard Library
selected elements
create, detail page
crosshatched dittos
place on current detail page
place on current view
define
lever point
pivot point
description
display
current view
detail page
dittos
erase, detail page
filled dittos, place on current detail page
hints for using
primary menu options
transfer, current view or detail page

Details

DIMENSION, function
/SPEC/ screen
activate, secondary dimension mode
add, text
change
decimal place
text height of dimension
to out-of-scale dimensions
units of measurement
witness line ends
conceal
dimensions
extension line
create
chain of dimensions
dimensions
leader line
define
tolerances and limits
trailing label
description
flip, witness line ends
Fractional dimension values
DIMENSION function options
/ANG/
/CHAM/
/CHG/
/CRV/
/DIA/
/HORIZ/
/NORM/
/NSHO/

/PARAL/
/RAD/
/SHO/
/SPEC/
/VERT/
primary menu options
measure
angle
chamfer line
diameter of a circle
distance between datum and element
distance between two points
horizontal distance between endpoints
horizontal distance between lines
horizontal distance between points
length of a curve
length of line segment
normal between two elements
radius of a circle
vertical distance between endpoints
vertical distance between lines
vertical distance between points
modify, dimension
rejustify, text
relocate, dimension
restore, display of dimensions
secondary dimension decimal place, set
character to be inserted before dimension text
default end condition
default text height
distance of extension lines
length of extension lines
number of blank spaces before dimension text
Standards
slant, extension lines
Dimensions, Toleranced, limited, basic
Disk drives
Dittos, spacing evenly
Dot, create
Drawing basic geometric elements
Drawing surface

E

ELECTRICAL function
/LIBRARY/
/SCHEMATICS/
text strings
replace
·a group of dittos with their individual elements
·ditto with individual elements
·similar text strings
Elements, selecting
Ellipse, offset
Erase, view
/EXIT/

F

F1 Key
F2 Key
F3 Key

FILES Function
Plot data, defining with plot rectangle

FILES function options
/CALL/
/DRIVE/
/FILE/
/LOGOFF/
/PLOT/
/START/
/TEXT/
/UNITS/
/USER/

change
dimension
filename
units
view

create
flag, read-only
library, standard
password
plot data
standard library

define
current group,user
drive
plot data
user

delete, model
description
display, filled areas
erase, plot data
file, model
filename
add comments
show comments
Hints for using
logoff, system, CADAM
plot, model
primary menu options
remove
flag, read-only
password
retrieve, model
start, model
text display, mainframe compatibility
transfer, model

Fill, Ditto

Fractional dimension values

Fractions

Function Key Box
on screen display
Pop-up Menu Screen
Side-bar Menu Screen

Function Key Box

Function Key Display

Function Keys, summary

Functions, activating

G

Geometric Tolerancing Symbols

Getting started

Glossary

Group
flip, element
move, element
rotate, element
scale, element

GROUP function
/ABORT/
/ATTRIBUTE/
/MIRROR/
/SETS/
/TRANSL/
/TRAP/
all elements in a model
attributes
add to a set

- assign to element
- create
- deleting
- edit
- finding
- number, changing

break, group
cancel any procedure
color, group
create
- group to be stretched
- new elements to existing sets
- sets
- trapping an entire view
- using a polygon to trap
- using a current window to trap
- using a rectangle to trap

description
display
- sets
- specified set

elements
- add to group being reflected
- subtract from group being reflected

flip
- add elements to group
- group
- group access a line
- selected elements across a line
- subtract elements to group

make window center the origin
mirror, group
move, group
primary menu options
project group
reflect
- group across a line
- group across two lines
- selected elements across a line
- selected elements across two lines

relimit, group
rotate
- group
- group around pivot point
- group relative to an element

scale, group
scale, changing
sets
- add member element
- change name
- delete member elements
- deleting
- deleting nested set
- make temporary
- nesting

sets, create
show, group
stretch, group
style, group

H

Hardware
- disk drives
- floppy
- hard
- installation
- keyboard
  - F2 key
  - F3 key
- mouse
- digitizer

Hatch, Ditto (Crosshatch)

I

Index

Indicating approximate locations

Information messages

Installation
- hardware
- software

Introduction to MICRO CADAM

K

Keyboard

Keying in values

L

Line, offset

LINE function
- /ANGLE/
- /CENTER/
- /EXT/
- /HORZ/
- /LENGTH/
- /NORM/
- /PARAL/
- /PT-PT/
- /UNLIMITED/
- /VERT/

create
- angle centerline
- chain of lines

- defined length
  - horizontal line
  - vertical line
  - angle line
  - normal line
  - parallel line

- extension line
- horizontal centerline
- multiline
- normal centerline
- parallel centerline
- point-point line

- unlimited length
  - horizontal line
  - vertical line
  - angle line
  - normal line
  - parallel line

- unlimited length line

- vertical centerline

- description
- hints for using /MLT/
- primary menu options

Line weight and type
- defining
- defining a group's
- display elements
- setting mode

Logging off CADAM

Logging on CADAM

M

Managing models

Menu line

Menu options, selecting

Menus, sub

MICRO CADAM
- capabilities of,
- drawing surface
- functions
- hardware components
- introduction to

Model size

Modifier menu

Modifying Geometry

Mouse
- INDICATE button
- indicating general locations
- moving pointing cursor
- SELECT BUTTON
- selecting elements and menu options
- window toggle
- YES/NO button

N

NOTE function
- /CHG/
- /DISP/
- /GEN NOTE/
- /LH/CTR/RH/FILL/
- /NO-SPEC/
- /NOTE/
- /PARMS/
- /POSN/

alternate characters
boxing text
change
- angle
- character height
- character width
- horizontal spacing
- note
- scale
- size
- vertical spacing

copy, note
create
- alternate character note
- box, minimal space
- column, note
- note

define, position
description
edit, note
Hints for Using Note Function
justify
- multiline notes
- note

maintain
- angle
- scale

move, note
no-show, note
primary menu options
replace, one note with a copy of another
reset parameters
rotate, note
special options
standard sizes
view
- box notes
- no-show

Numbers, working with

O

OFFSET function
- /OFFSET/
- description

offset
arc
circle
ellipse
line
several elements
spline
primary menu options
Two directional

On-screen function display

ORIGIN function
/CHOOSE/
/ERASE/
/NEXT/
/NO-SHO/
/SHOW/
/START/
choose
current coordinate system
current view
create, alternate coordinate system
description. See Axis block
erase, current coordinate system
no-show, axis block arrows
primary menu options
show, axis block arrows

Origins

Overlay, window

Overplot

P

Plot Data, creation of

Plot data, erasing

PLOT

POINT function
/DEF PTS/
/GRID/
/POINTS/
/SPACE/
analyze, grid parameters
create
at defined distance
at projection of element
between two points
grid with defined spacing
grid with variable spacing
specify X,Y values
using X,Y values
with INDICATE
·with intersecting element and X value
with intersecting elements
description
display
centerpoint
defining points of an element
defining points of group of elements
endpoints
erase, grid
no-show grid
primary menu options
spacing evenly
dittos
points
Primary menu
Prompting messages

R

Recovering from system failures

Rectangle, create

Reference

Refreshing screen display

Related publications

RELIMIT function
- /BREAK/
- /CLOSE/
- /ENDS/
- break
  - element
  - group of elements
  - group of lines
  - line
- close, element, broken
- description
- primary menu options
- relimit
  - circle
  - dimension line
  - ellipse
  - extension line
  - group of elements
  - line
  - several elements
  - spline
  - to an intersecting element

/RETURN/

S

Scale message

Screen display
- improper
- refreshing

Secondary menu

Selecting elements and menu options

Self-study course

Sets
- add attributes
- add member elements
- attributes
  - deleting
  - finding
- create
- create from group
- delete member elements
- deleting from model
- deleting nested set
- display specified members
- name, changing
- nesting

SHOW function
- /ERASE/
- /ERS DIM/
- /ERS PTS/
- /NO SHO DIM/
- /NO SHO/
- /PACK/
- /SHO DIM/
- /SHO/
- compress, data in memory
- conceal
  - dimensions
  - elements
  - group of elements
- description
- display
  - elements previously concealed
  - previously concealed dimensions
- erase
  - all points in view
  - dimensions
  - elements

group of elements
group of points
points
exclude
dimensions from erasure
points from erasure
primary menu options
redisplay, elements previously concealed
show, view

Software installation

SPLINE function
/CONIC/
/CONVERT/
/END/
/LIN SPL/
/SPLINE/
convert, ellipse to spline
create
conic section
linear spline
spline
description
offset
primary menu options

Starting a new drawing

SYMBOL function
/ARW/
/BLN/
/DLTA/
/DOT/
/RECT/
/RIVET/
/SECT/
/TRI/
/TXT-LN/
change
angle
fill pattern, symbol
scale, special symbol
scale, symbol
create
arrow
arrow, section line
balloon
dot
rectangle
rivet
symbol, valid basic
table, symbol
textline
triangle, equilateral
description
display
delta
filled symbols or dittos
symbol
symbols, filled
table, symbol
triangle, filled
edit
dot
rectangle
rivet
table, symbol
textline
triangle
flip, symbol
hints for creating
place, symbol
place symbols from symbol table
primary menu options
replace
ditto
font
symbol
rotate, symbol

T

Temporary hold

Triangle, create

TYPE function
- /COLOR/
- /SIDE ON/
- /STYLE/
- change
  - background color
  - element, line type
  - element, line weight
  - system colors
- color
  - default
  - element
  - group
  - other than default
- copy, model color
- description
- display
  - elements
  - elements of active color
- primary menu options
- set, color
- style, group of elements

U

Units

User Action

Using basic procedures

Using related procedures

Using this book

V

View ID message

W

WINDOW function
- /BOX/
- /MOVE/
- /OVRLY/
- /PLOT/
- /SET/
- /SIZE/
- /TURN/
- call, stored position
- center
- change
  - location
  - size
- define, model size
- description
- primary menu options
- redefine, center and size
- return
  - original angle
  - original coordinates
- rotate, window
- set, plot axis
- store, current position

Y

YES/NO function key

YES/NO key, F2 key equivalent